OP 635 (FIRST REVISION): TORPEDOES MARK 14 AND 23 TYPES

In the collection of the
U.S. Naval Undersea Museum

NUM.2019.010.153 and NUM.2019.010.154

UNITED STATES NAVAL
UNDERSEA
MUSEUM

NUWESNUMLIB
00100893
00100893
PROPERTY OF THE
NAVAL UNDERSEA MUSEUM LIBRARY
KEYPORT, WA 98345

[redacted]

OP 635

Superseded by OP635dtd
March 1946 10-8-68 M. Turner

(FIRST REVISION)

TORPEDOES
MARK 14 AND 23 TYPES

24 MARCH 1945

This publica[redacted]and shall be safeguarded in accordance with the security provisions of U. S. Navy Regulations, 1920, Article 76.

BUREAU OF ORDNANCE
NAVY DEPARTMENT
WASHINGTON 25, D. C.

24 March 1945

[redacted]

ORDNANCE PAMPHLET 635 (FIRST REVISION)

TORPEDOES MARK 14 AND 23 TYPES

1. Ordnance Pamphlet 635 (First Revision) explains the construction and operation of Torpedoes Mark 14 and 23 Types, and contains complete information on the adjustments, overhaul, and tests required after the torpedo has been accepted for issue by the service.

2. This pamphlet supersedes Ordnance Pamphlets 635 and 635A, and Ordnance Data 3834 (Revision A) and 3842 (Revision A), which should be destroyed.

3. Detailed information is given for the gyroscope in Ordnance Pamphlet 627A, and for the exploder mechanism in Ordnance Pamphlets 663 and 663A. Information on workshop equipment and its use may be found in Ordnance Data 750.

4. This publication is RESTRICTED and shall be safeguarded in accordance with the security provisions of U. S. Navy Regulations, 1920, Article 76.

G. F. HUSSEY, JR.,
Rear Admiral, U. S. Navy,
Chief of the Bureau of Ordnance

[redacted]

TABLE OF CONTENTS

Page

Introduction

General 7
What is a Torpedo? 7

Chapter 1—General Description—The Sections and Their Operation

War Head 9
Exercise Head 9
Air-Flask Section 9
Midship Section 10
Afterbody 10
Tail 10
How the Torpedo Operates 10
Buoyancy 13
Marks and Modifications 13
Interchangeability 14
Identification Numbers 14

Chapter 2—War and Exercise Heads

Section 1—The War Head 15
Explosive Charge 16
Exploder Mechanism 17
Booster 19
Section 2—The Exercise Head 21
General Description 21
Exercise Head Details 21
Air-Releasing Mechanism 22
Discharge Valve 23
Torpedo Headlight 24
Torpedo Torch 24
War Exercise Head 24
Marker Bomb 26

Chapter 3—The Air-Flask Section

General Description 27
Air-Flask Section Detail 27
Air Compartment 28
Blow Valve 29
Water Compartment 29
Blow-Out Plug 31
Fuel Flask 31
Midship Section 32
Major Fittings Attached to the Midship Section 32

Page

Stop and Charging Valves 32
Air Check Valves 35
Vent Fitting 37
Fuel and Water Strainers and Check Valves 37
Connections from Air Flask to Afterbody 39
Preheater 39

Chapter 4—The Afterbody and Its Mechanisms

General Construction 41
Major Mechanisms of the Afterbody 42
Starting Gear 43
Governor 43
Starting and Reducing Valve Group 45
Control Valve 51
Superheating System 53
Combustion Flask 54
Fuel and Water Sprays 55
Igniter 55
Propelling Mechanism 56
Speed Change Mechanism, Nozzles and Nozzle Valve 56
Turbine Bulkhead 59
Main Engine 60
Oiling System 64
Smoke Prevention 67
Exhaust System 69

Chapter 5—The Tail Section

General Construction 71
Propeller Sleeves 75
Propellers and Hubs 75

Chapter 6—The Gyro and Depth Mechanisms

General 77
Gyroscope 77
Cam Plate 83
Gyro Pot 84
Gyro Spinning and Unlocking Mechanism 87



	Page
Centering Features	87
Operation of Gyro Spinning and Unlocking Mechanism	88
Pallet Mechanism	91
Steering Engine	94
Steering Line	95
Gyro Reducing Valve	96
Angle-Fire Setting Device	96
Depth Control Mechanism	96
Pendulum	98
Hydro-Diaphragm	100
Depth-Setting Mechanism	101
Depth Engine	104
Depth Steering Line	108
Transportation Screw	108

Chapter 7—Adjustments and Tests

General	109
Section 1—Preliminary Adjustments	110
Section 2—Leak-Meter Test of Torpedo	120
Section 3—Test and Installation of Exercise Head	121
Section 4—Final Adjustments and Final Preparation for Firing	123
Final Adjustments	123
Final Preparation for Firing	126
Section 5—Treatment After a Run	130
If Torpedo is not to be Fired Immediately	131
Section 6—Routine for Upkeep of Fully Ready Torpedo	133
Section 7—Lubrication Guide	135
Section 8—General Information	138

Chapter 8—Disassembly, Overhaul, Assembly, and Tests

General	139
Section 1—Exercise Head	141
Disassembly	141
Overhaul, Assembly, and Tests	142
Section 2—Air Flask Section	147
Disassemble Air Flask	148
Overhaul, Assembly, and Tests	149
Section 3—Afterbody—Removal of Major Units From	161
Section 4—Afterbody, With Parts Assembled to Shell	163
Overhaul, Assemble, and Test Parts Assembled to Afterbody Shell	164
Section 5—Valve Group and Superheater	168
Disassembly	168
Overhaul, Assembly, and Test	169
Section 6—Main Engine	182
Disassembly	182
Overhaul, Assembly, and Test	184
Section 7—Starting Gear	204
Section 8—Depth Mechanism, Gyro Mechanism, and Gyroscope	208
Overhaul, Assembly, and Test	208
Section 9—Tail Cone Assembly	255
Section 10—Afterbody—Assembly and Test	257
Section 11—Assembly of Afterbody on Air Flask	269

Chapter 9—Safety Precautions

General	272
Safety Precautions Applicable to Charging Torpedo Air Flasks	272
In Testing Functioning of Depth and Gyro Mechanism with Gyro	273
Handling of Torpedoes	273
Applicable to Ships Carrying Torch Pots (Calcium Phosphide)	273
Applicable to War Heads and War Head Attachments	273
Recovering Torpedoes	274
Transporting of Torpedo Air Flasks (Charged)	274

Appendix—Principal Dimensions, Weights, and Characteristics

Mark of Units	275
Performance	275
Dimensions (inches)	275
Weights (pounds)	275
Capacities	275
Propulsion	275
Pressures (lb. per sq. in.)	276
Buoyancy, Trim, and Stability	276
Table of Approximate Buoyancy Factors, Torpedoes Mk 14-3A, 23, 23-1	276
Distribution	277

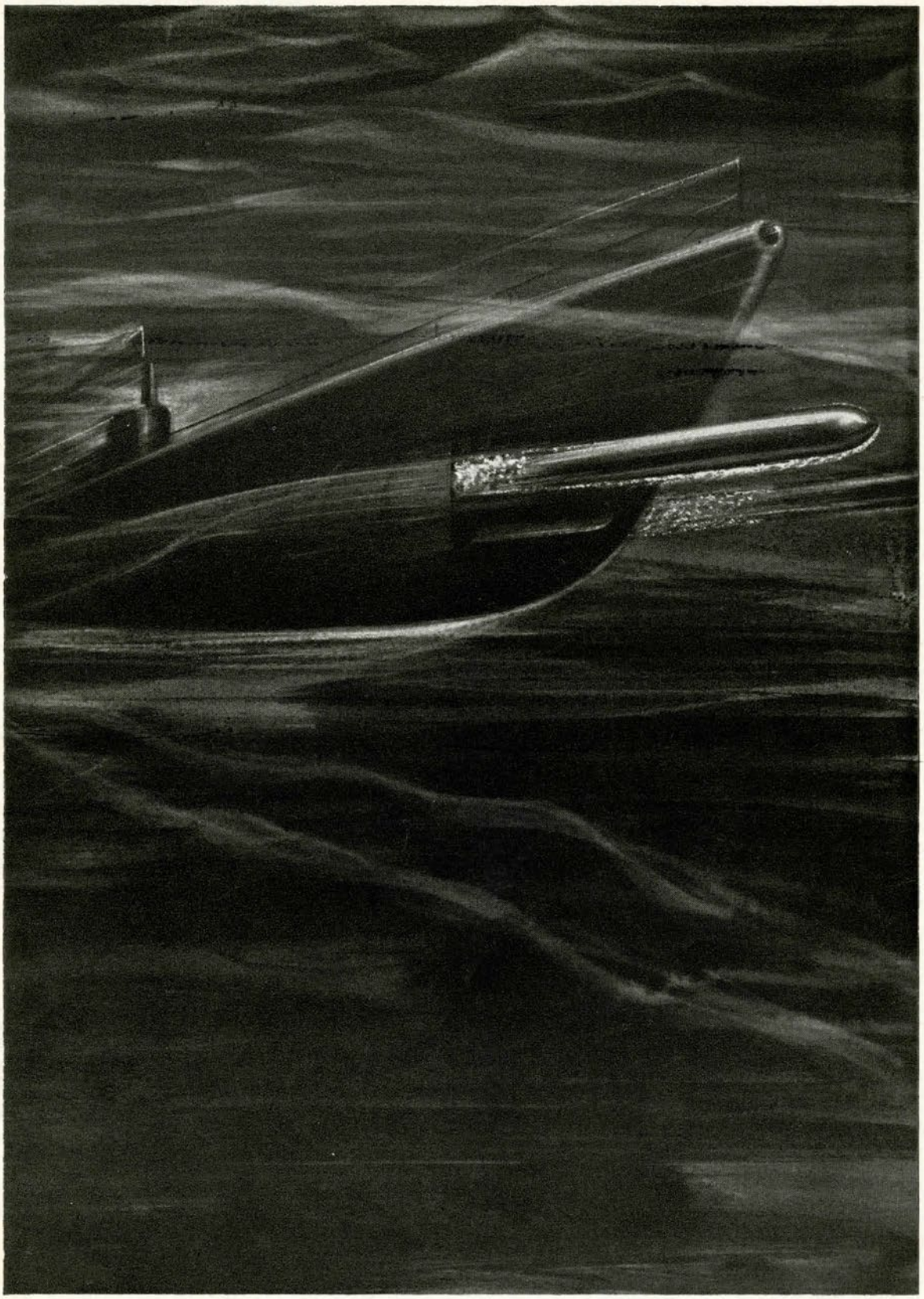

Submarine Firing Torpedoes Mk 14 Type

INTRODUCTION

General

This ordnance pamphlet describes and illustrates the most essential details of construction, handling, and operation of the Torpedoes Mk. 14 and Mk. 23 Types. These torpedoes are designed for launching from submarines, but they may also be launched from surface craft. A careful study of this pamphlet, and consultation with qualified personnel when uncertainties arise, will give the beginning student a sufficient knowledge of the fundamentals. Such knowledge, combined with common sense and mechanical ingenuity, will make it possible for the torpedoman to perform satisfactorily all the service operations that are required for the maintenance, adjustment, and tests of these torpedoes.

The Torpedoes Mk. 14 and Mk. 23 Types, for all their size and weight, are carefully and delicately constructed. Each torpedo, therefore, should be given the care and respect due all valuable machines.

Mistakes in the handling and servicing of torpedoes can be too costly—in lost opportunities for the destruction of enemy vessels, in the loss of lives of our own men in the service, and in money wasted—to excuse reluctance or failure to seek accurate information from those who are qualified to supply it. Slighting one step in the servicing of a single torpedo may result in that torpedo missing its target, and the armament of that missed target may cause destruction and loss of life in our own fleet. That thought should be kept constantly in mind while studying this pamphlet, and when handling or servicing torpedoes.

What is a Torpedo?

A torpedo is a self-propelled, underwater weapon, designed to carry an explosive charge to an enemy vessel and destroy it. It is equipped with mechanical devices that automatically generate the power to drive it, and other devices that control its direction, its speed, and the depth at which it will travel in the water, once it has been launched.

The torpedo consists of four major exterior sections, each of which will be more fully described later. They are: (a) the head; (b) the air-flask section; (c) the afterbody, and (d) the tail. There are two types of heads: the war head and the exercise head. The war head contains the explosive charge and is used in combat. The exercise head is used for test runs and target practice. The air-flask section stores the supply of air, fuel, and water required to operate the propelling and controlling mechanisms that are contained in the afterbody. The tail includes the propellers and the rudders.

The propelling and controlling mechanisms of the afterbody are set in operation as follows: As the torpedo is fired from the tube, the forward motion of the torpedo causes the starting lever to be thrown aft by the tripping latch. This action of the starting gear allows the air to flow from the stored-up supply in the air flask to all the operating mechanisms. The operating mechanisms then propel and control the course of the torpedo to its target.

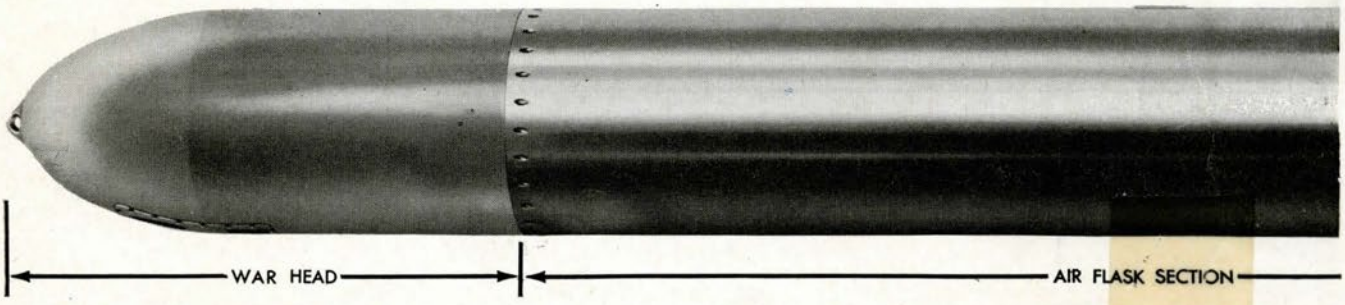

Figure 1—Torpedo Mk 14 Type

Chapter I

GENERAL DESCRIPTION

THE SECTIONS AND THEIR OPERATION

As already stated, a complete torpedo consists of four major units or sections, comprising the head (war or exercise), air flask, afterbody, and tail; see Figs. 1 and 2. All these units or sections of the torpedo are described in the following chapters of this pamphlet. A brief general description of each is given here, however, so their relationship may be more clearly understood. In connection with these general descriptions, readers should refer to the illustrations (figures) in the text.

War Head

The war head (Figs. 4 and 5) is the business end of the torpedo. It carries an explosive charge of either TNT or Torpex, and also the firing device (exploder mechanism) which detonates the explosive at the target.

Exercise Head

All torpedoes are given a trial or exercise run before being sent into service. Target practice is necessary, moreover, for training and improving the skill of personnel. The exercise head (Fig. 9) is used as a substitute for the war head in trial runs and in target practice.

This head has the same dimensions and trim characteristics as the war head, except that it is made of steel instead of phosphor bronze. Instead of the explosive charge and the exploder mechanism, it carries liquid ballast. It is so constructed that the liquid ballast is expelled at the end of the run, being forced out by air from the air flask. The air replacing the liquid ballast gives the torpedo buoyancy, which causes it to float to the surface, thus permitting recovery.

Air-Flask Section

The air-flask section (Figs. 2, 18, and 19) consist of the air compartment, the water compartment (which also contains the fuel flask), and the midship section. The air compartment carries highly compressed air, which, combined with fuel (alcohol) and water, provides the energy to drive the mechanisms which propel and guide the torpedo. The air compartment is a storage tank for high-pressure air, and is located directly abaft the war or exercise head as

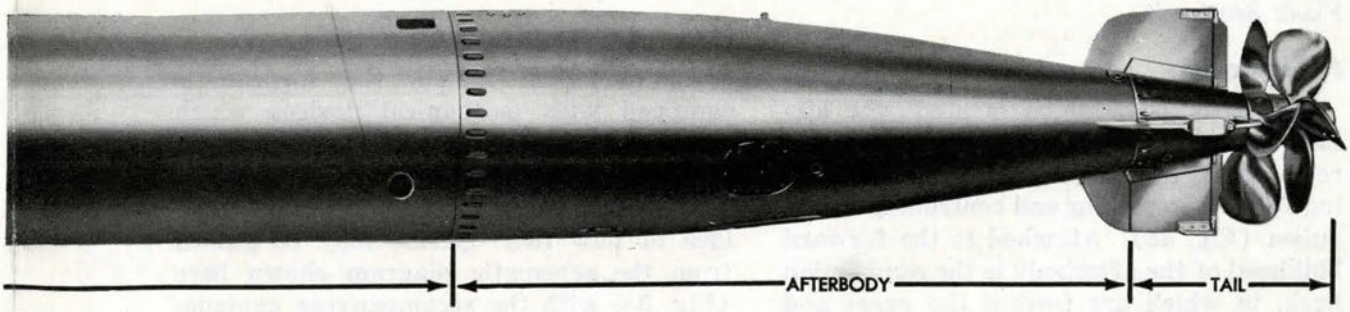

with War Head, side view

shown in Fig. 2. The combination of the air compartment, the water compartment, the fuel flask, and the combustion flask, may well be termed the "boiler room" of the torpedo.

Midship Section

The midship section is riveted and soldered to the after end of the water compartment of the air-flask section. Its after end, in turn, is machined to form a joint with the afterbody. The parts in this midship section do not require the exclusion of water from their exterior surfaces. Furthermore, the parts which convey hot gases must be externally cooled in order that they may not be injured by the interior temperature. Also, access to certain other parts must be provided to permit adjustment or manipulation. Provision is made, therefore, for free circulation of sea water in the midship section, and for access to parts contained therein, by making openings in the shell.

The shell is clearly marked (Fig. 27), indicating access to the parts and valves which are described in Chapter 3, "The Air Flask Section."

Afterbody

The afterbody, which is abaft the air-flask section, may be termed the engine room of the torpedo, in that it is the housing for the propelling and controlling mechanism (Fig. 32). Attached to the forward bulkhead of the afterbody is the combustion flask, in which are formed the gases and steam for the turbines which supply the driving force for the torpedo's two propellers. The afterbody contains the depth mechanism, which, with its depth engine and depth rudders, maintains the torpedo at its set depth. It also contains the gyroscope with its related mechanism which, in conjunction with the steering engine and steering rudders, maintains the torpedo on its course.

Tail

Abaft the afterbody, and completing the torpedo assembly, is the tail section (Fig. 64A). This section carries the tail blades and the depth and steering rudders, which maintain the torpedo's depth and course, and also the two propellers which propel it through the water.

The propellers revolve in opposite directions, one clockwise and the other counterclockwise, so that the torque or turning power of the one counteracts that of the other. A single propeller would tend to make the torpedo itself revolve in the water, making it difficult or impossible to control its course and depth.

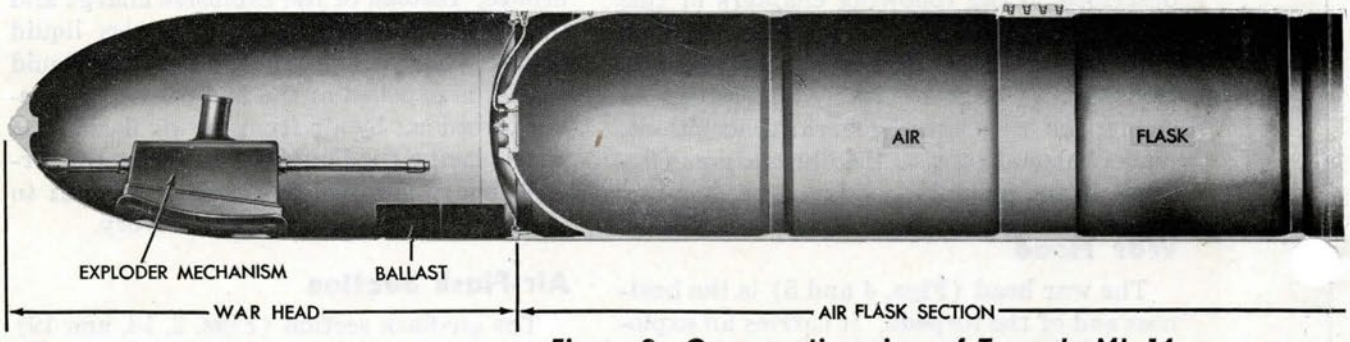

Figure 2—Cross-section view of Torpedo Mk 14

How the Torpedo Operates

As has been stated, the torpedo is equipped with mechanical devices which make it self-propelling after it is launched. While these devices will be described in detail in the pages following, a general overall idea of how they operate may be gained from the schematic diagram shown here (Fig. 3), with the accompanying explanation.

It must be clearly understood that the schematic diagram does not show the various operating mechanisms in their actual positions, or even in their relative positions. The mechanisms have been reproduced photographically with a view to showing them in sufficient detail to make them readily identifiable when seen in their proper positions in the torpedo or when removed from the torpedo.

Furthermore, the schematic diagram may show several parts separately, whereas those parts may actually be contained in one body or in one mechanism. Also, it should be understood that the action of all parts is practically simultaneous once the starting gear has been tripped and the operating mechanisms set in action.

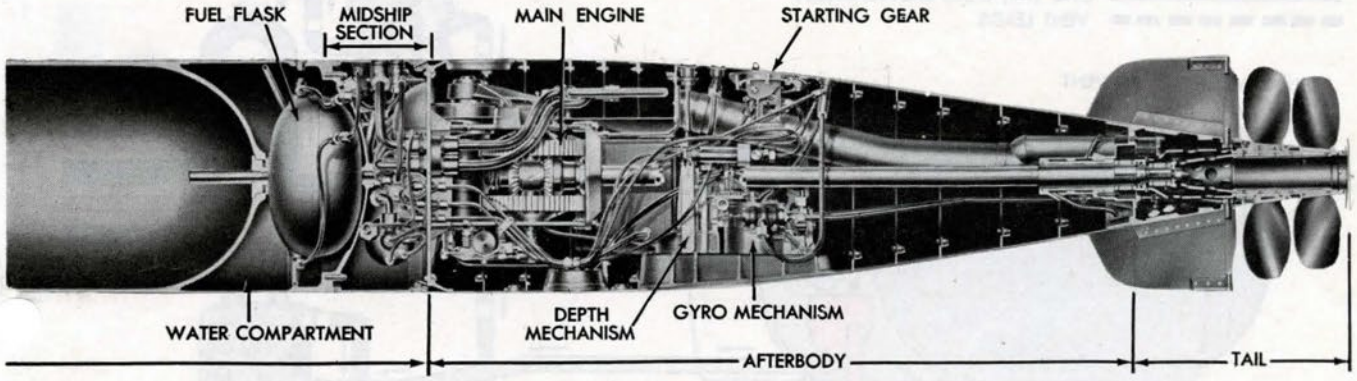

Type, showing location of interior mechanisms

Only the air flask and the afterbody are shown in the schematic diagram. When a war head is attached, there is no air connection from the war head to the air flask. When an exercise head is attached, however, the air is connected at the blow valve, which is located at the forward end of the air flask, thereby allowing the air to flow to the air-releasing mechanism in the exercise head, as is more fully explained in the chapter dealing with the war and exercise heads (Chapter 2, Section 2).

Referring to the schematic diagram (Fig. 3): High-pressure air is stored in the air flask. It is fed through the stop and charging valve, through the preheater, then through a small orifice in the starting valve of the starting and reducing valve group, and to the piston of the starting gear. The air is held under high pressure between the air flask and the starting-gear piston until the torpedo is launched.

As the torpedo is fired, the starting lever is thrown aft by the tripping latch in the tube, and this action lifts the starting piston off its seat. As the starting piston is lifted, the high-pressure air banked up over the starting valve is released, thereby allowing the starting valve to lift. As the starting valve lifts, the air passes to all the operating mechanisms of the torpedo.

Part of the high-pressure air is diverted to the gyro spinning mechanism, and part to the control chamber of the reducing valve. The bulk of the high-pressure air entering the reducing-valve chamber passes through the reducing valve, where the air is reduced from flask pressure to approximately 450 p.s.i. (pounds per square inch). This reduced-pressure air is then distributed by three branches: (a) to the air checks; (b) through the restriction valve to the combustion flask; and (c) to the igniter.

From the air checks, the low-pressure air flows to the water compartment and to the fuel flask, forcing the water and fuel through pipes to the water and fuel strainers and check valves. The fuel and water then pass through their respective restrictions in the restriction valve and to the fuel and water sprays in the combustion flask. The main supply of the reduced-pressure air passes through the air restriction in the restriction valve and to the combustion flask.

The reduced-pressure air also fires the igniter, which ignites the fuel in the combustion flask, where the combination of fuel, air, and water is converted into gases and steam at a high temperature and fed through a pipe to the nozzles of the turbines, furnishing the power for propelling the torpedo.

Air passes from the top of the combustion flask and from the control valve to the air-strainer body. From the air-strainer body, this air flows through two branches. One branch leads to the steering engine and through the gyro reducer to the gyro (which is inside the gyro pot) where it sustains the spin of the gyro. The other branch leads from the air-strainer body to the depth engine.

As the torpedo is launched, its initial dive takes it below its pre-set depth. The depth mechanism brings it back to set depth, and maintains it at this depth by means of the depth rudders. The steering rudders, operated by the gyro mechanism, keep the torpedo on its predetermined course to the target.

As the torpedo runs through the water, a small impeller on the under side of the war head rotates, arming the exploder mechanism, and putting it in condition to be fired when it reaches the target.

Should the torpedo miss the target, it will run its course until its power is exhausted and then sink to the bottom.

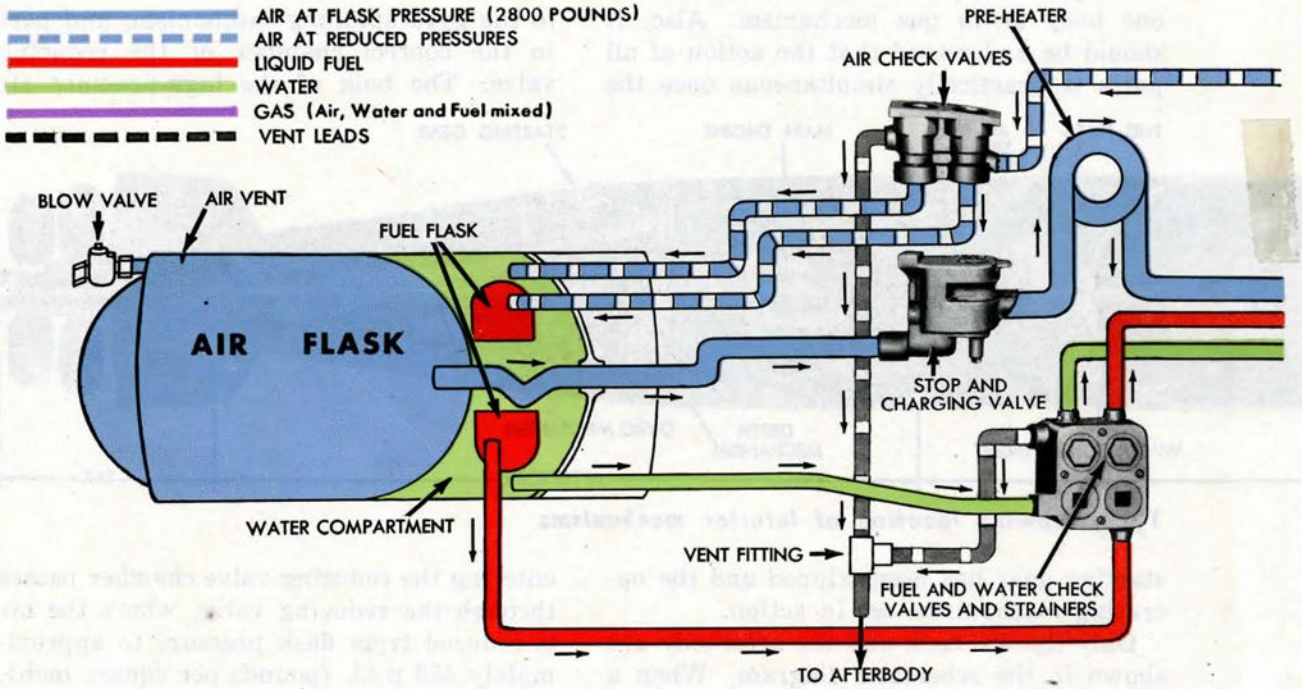

Figure 3—Schematic Diagram, Torpedoes Mk 14 and Mk 23 Types, showing

When fitted with an exercise head, a connecting pipe leads from the air flask to the air-releasing mechanism in the upper part of the exercise head. When the air flask pressure has fallen below the pressure setting on the air-releasing mechanism, a valve in the mechanism is opened, allowing the air to enter the exercise head and force the water out through water discharge valves in the bottom of the head. The air replacing the water in the exercise head gives the torpedo positive buoyancy. This causes the torpedo to float, so it can be retrieved.

Buoyancy

A torpedo is said to have **positive buoyancy** when it has a tendency to rise to the surface; it is said to have **negative buoyancy** when it has a tendency to sink. The buoyancy of a torpedo in water depends upon the ratio of its weight per unit volume as compared to the weight per unit volume of water.

The three factors which affect the buoyancy of a torpedo are: (a) the displacement (volume); (b) the fixed (not expendable) weight; and (c) the expendable weight. The air, the water in the water compartment, and the fuel are expended in proportion to the length of the run. The water ballast in the exercise head is expended at the end of the run. If a sufficient amount of weight is expended, the torpedo will obtain **positive buoyancy** and will finish its run on the surface. The buoyancy of the torpedo will, of course, be adversely changed by salt water leakage into the afterbody and the exercise head. A table of approximate buoyancy factors will be found in the appendix at the back of this pamphlet.

Marks and Modifications

The designations Mk 14 Mod 3A, or Mk 14-3A, Mk 23, etc., apply only to the complete torpedoes, including the afterbody and the tail. Each type of war or exercise head, also the gyroscope and the exploder mechanism, are given individual designations, as will be described in the chapters referring to those parts. Usually, when changes or improvements are made in any part of a torpedo, the changed torpedo is given either a modification number or a change in Mark.

For example, the depth mechanism of the Torpedo Mk 14-3 was improved, and the torpedo was designated the Torpedo Mk 14-3A. The Torpedo Mk 14-3A was then changed to a single high-speed torpedo, and it was given the designation Mk 23.

The Torpedoes Mks 14, 14-1, 14-2, and 14-3 are out of service. The Torpedo Mk 14-1A is a two-speed torpedo, with speeds

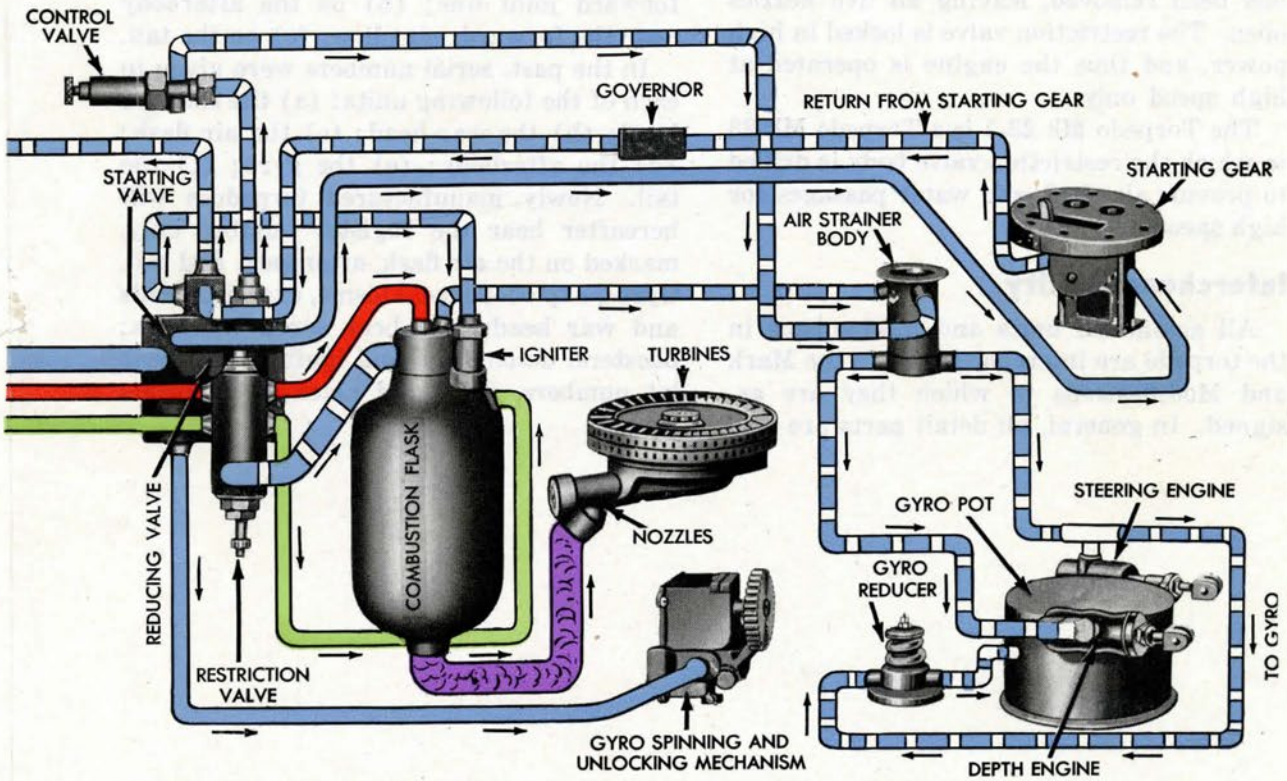

flow of air to operating mechanisms (see explanation in descriptive text)

of 31 and 46 knots, having a range of 9,000 yards and 4,500 yards respectively. The gyro mechanisms provide for angle shots up to 90 degrees right or left.

The Torpedo Mk 14-3A has the same speed and range as the Mk 14-1A, but the gyro mechanism provides for angle shots up to 160 degrees.

The Torpedo Mk 23 is a Torpedo Mk 14-3A in which the speed-change mechanism has been removed, leaving all five nozzles open. The restriction valve is locked in high power, and thus the engine is operated at high speed only.

The Torpedo Mk 23-1 is a Torpedo Mk 23 in which the restriction valve body is drilled to provide air, fuel, and water passages for high speed only.

Interchangeability

All assembled units and mechanisms in the torpedo are interchangeable in the Mark and Modifications to which they are assigned. In general, all detail parts are also interchangeable except for special assembling operations, such as lapping of pistons, doweling, etc.

Identification Numbers

The **register number** is the torpedo identifying number. All others are serial numbers which identify some part or unit of the assembly. The register number is stamped in three places: (a) on the flask near the forward joint line; (b) on the afterbody near the forward joint line; (c) on the tail.

In the past, serial numbers were given to each of the following units: (a) the exercise head; (b) the war head; (c) the air flask; (d) the afterbody; (e) the gyro; (f) the tail. Newly manufactured torpedoes will hereafter bear the register number only, marked on the air flask, afterbody, and tail. Gyros, exploder mechanisms, exercise heads and war heads will bear serial numbers; boosters, detonators, and igniters will bear lot numbers, date, and place of manufacture.

Chapter 2

WAR AND EXERCISE HEADS

SECTION 1 — THE WAR HEAD

The **war head** is the torpedo's reason for existence. It is the "business end" of the torpedo, since it carries the explosive charge and the exploder mechanism which detonates it. The other sections of the torpedo merely comprise the vehicle for carrying the war head to its target.

Normally the war head, fitted with a protecting ring on its joint ring, is stowed with the exploder mechanism removed, and requires relatively little attention other than routine inspection. In time of war, however, when torpedoes are kept in the "fully ready" condition for extended periods of time, the servicing routines prescribed for the war head and its attachments must be rigidly followed.

The war heads provided for the Torpedoes Mk 14 and Mk 23 Types are the War Heads Mks 16, 16-1, and 16-4.

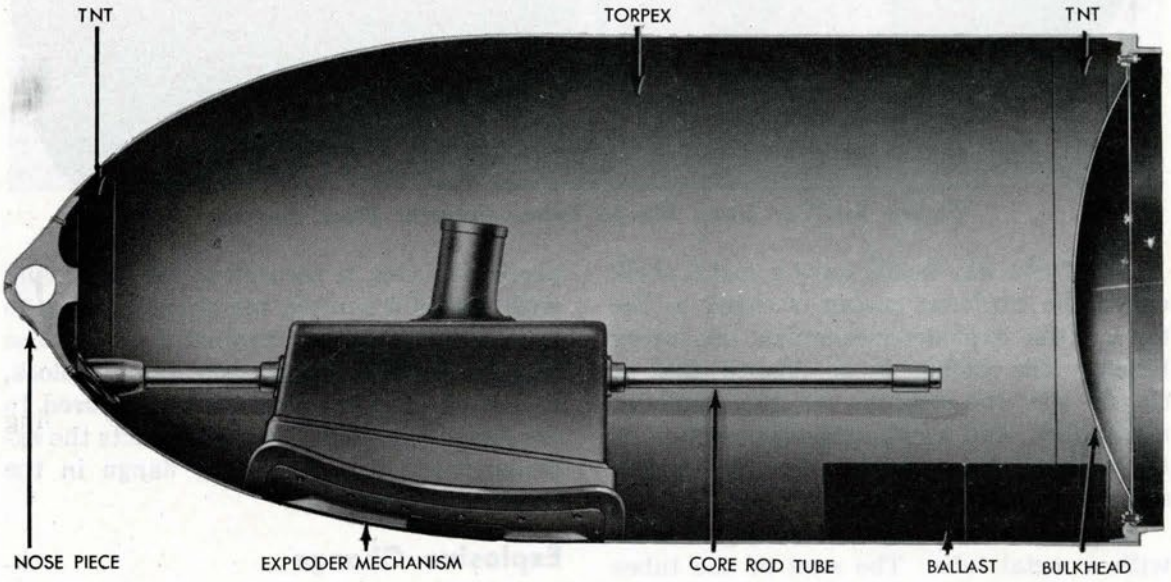

Figure 4—War Head Mk 16-4—Cut-away view

All the war heads are ogival in contour at the forward end, and cylindrical in form at the after portion. A nose piece secured to the forward end of the shell is provided to facilitate handling of the war head. The war-head shells are made of phosphor bronze in order to provide for more effective operation of the magnetic feature of the exploder mechanism.

The joint ring, attached to the after end of the head, is drilled and tapped for the joint screws used to attach the head to the air flask. The joint ring is also flanged for a steel bulkhead, dished in form, which is

bolted to it, and which, with a rubber gasket, forms a water-tight closure for the after end of the head. Three reinforcing plates cover the breaking tool holes when the bulkhead is installed to prevent sea water leakage through these holes. The bulkhead is fitted with a test connection.

tight chamber within which the exploder mechanism functions.

For transportation and stowage, a cast-iron protecting ring and an exploder-mechanism dummy block, or a sheet-metal cover which closes the exploder cavity, are provided with each war head in service. The

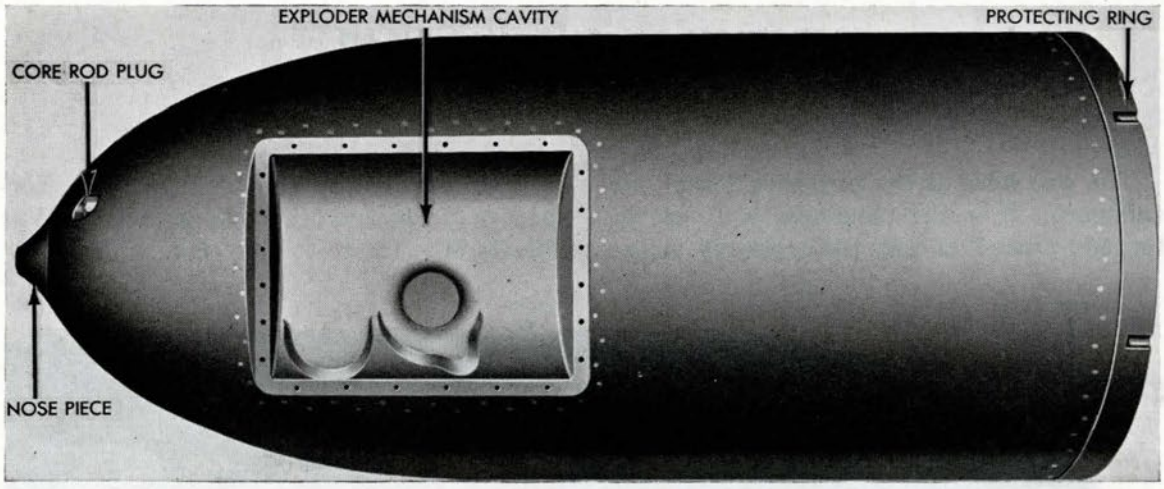

Figure 5—War Head Mk 16 Type—Exterior View, bottom

All of the war heads have a metal shell, called the exploder casing, secured to the top of the exploder-mechanism mounting flange. The casing is so shaped that it closely fits the contour of the exploder mechanism, and a cylindrical projection at its top provides a housing for the booster and safety chamber.

Each end of the exploder casing is fitted with a metal tube. The axes of the tubes are in line with each other and parallel to the center line of the war head. These tubes are provided as a housing for the exploder-mechanism core rod, which projects beyond the ends of the exploder casing. The forward core-rod tube is also secured to a fitting on the war-head shell. This fitting is closed by a plug which, when removed, allows insertion or removal of the core rod. A filler piece screwed to the plug fills the hole in the war-head shell and completes the smooth surface of the war head.

When the exploder mechanism is screwed to its flange with a gasket between the exploder base and the flange, the exploder casing and the exploder base form a water-

protecting ring is secured to the joint ring with six joint screws, the purpose being to protect the joint ring against damage. The wooden exploder-mechanism dummy block, or the sheet-metal cover, when secured to the flange with four screws, protects the exploder-mechanism mounting flange in the head against damage.

Explosive Charge

The war head contains a charge of high explosive, either TNT or Torpex, which is poured into the shell in the molten state.

War heads loaded with Torpex have a small charge of TNT in the nose of the head, and the War Heads Mk 16-1 and Mk 16-4 have a "topping charge" of TNT which fills the space between the after end of the Torpex charge and the after bulkhead of the war head. The War Head Mk 16, when loaded with Torpex, has a cavity in the after end of the charge in order to give the war head proper trim characteristics.

In all the war heads, the center of gravity is below the center line of the head in order to give the proper "pull around" stability

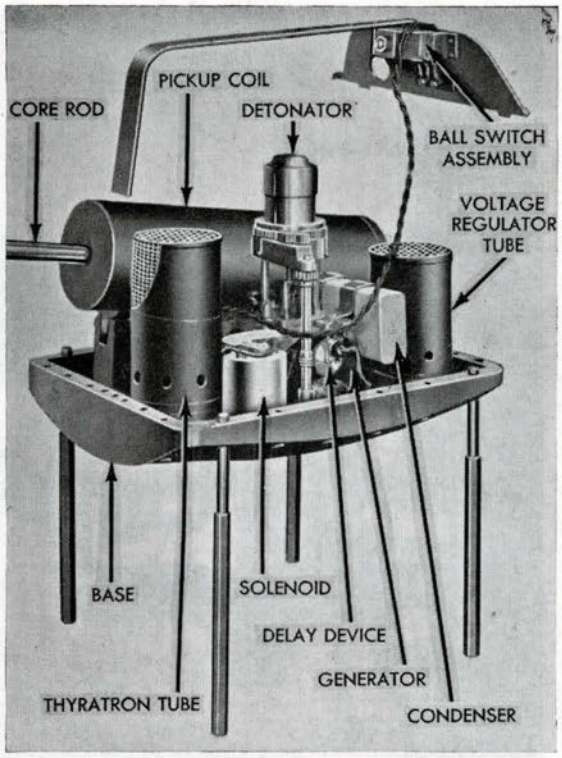

Figure 6—Exploder Mechanism Mk 6-5

to the head, thereby tending to reduce rolling tendencies of the torpedo when the torpedo is traveling through the water. (The weights and compositions of explosive charges for the various war heads are given, together with other statistical data, in the Appendix at the back of this pamphlet.)

Exploder Mechanism

The exploder mechanism shown in Fig. 6 is an indispensable part of the war head, since it is the device which detonates the explosive charge when the torpedo reaches its target.

War heads for the Torpedoes Mk 14 and Mk 23 Type are fitted with Exploder Mechanisms Mk 6 Mod 5, which are fired by direct impact with the target.

The exploder mechanism is mounted on a flange in a rectangular cavity (exploder-mechanism casing) in the forward part of the war head. The exploder-mechanism base is rectangular in shape to fit the war head cavity, and its exterior surface is curved to maintain the contour of the head.

A channel in the exploder mechanism base provides a path for the stream of water that drives the impeller wheel which furnishes the driving power for the various mechanisms within the exploder mechanism (Fig. 6A). The rotation of the impeller is transmitted to the interior of the exploder-mechanism base by means of a shaft passing through a watertight packing gland.

A direct-current generator driven from the impeller shaft supplies the electrical energy necessary for firing the detonator. A voltage regulator tube controls the output of this generator, limiting it to a nearly constant value, regardless of the speed of the generator. This generator charges a large condenser, which then becomes a reservoir of electrical energy. When this energy is released by closing an impact switch, it fires the detonator and detonates the war head.

When the torpedo is fired, the exploder mechanism must be inoperative for the first part of the run in order to protect the firing vessel from possible premature action of

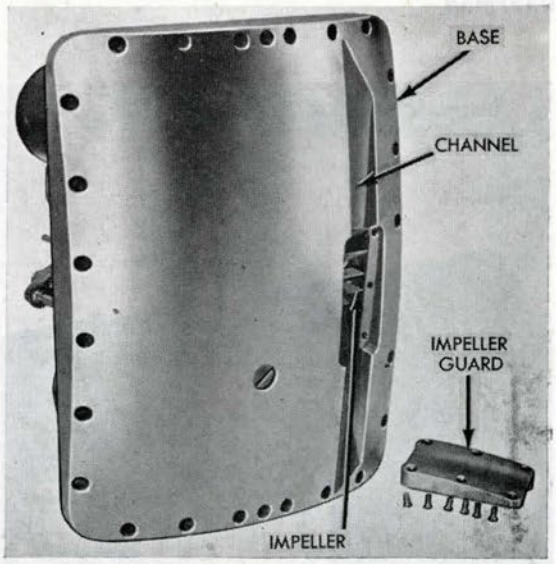

Figure 6A—Exploder Mechanism Base, showing Impeller, Channel, and Impeller Guard (removed)

the exploder mechanism. This is the function of the arming mechanism, the essential features of which are as follows:

1. The safety chamber, in which the detonator is housed during the first part of

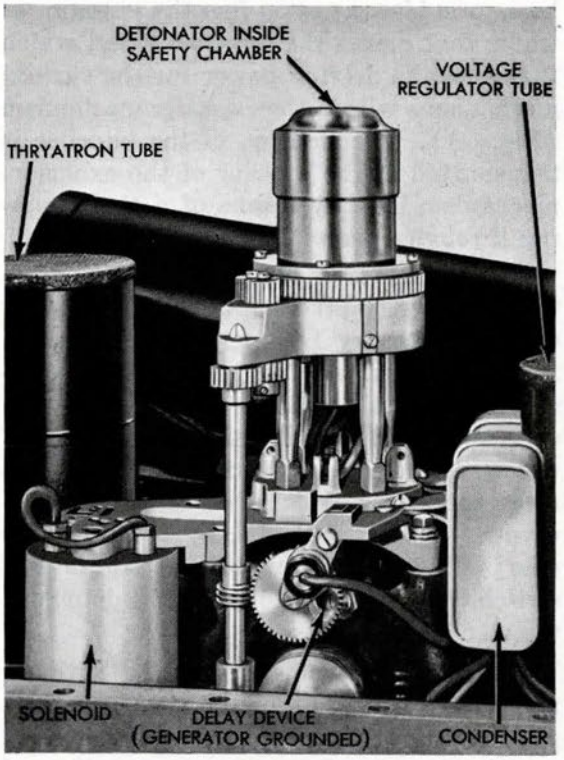

Figure 7A—Exploder Mechanism Mk 6-5—Unarmed

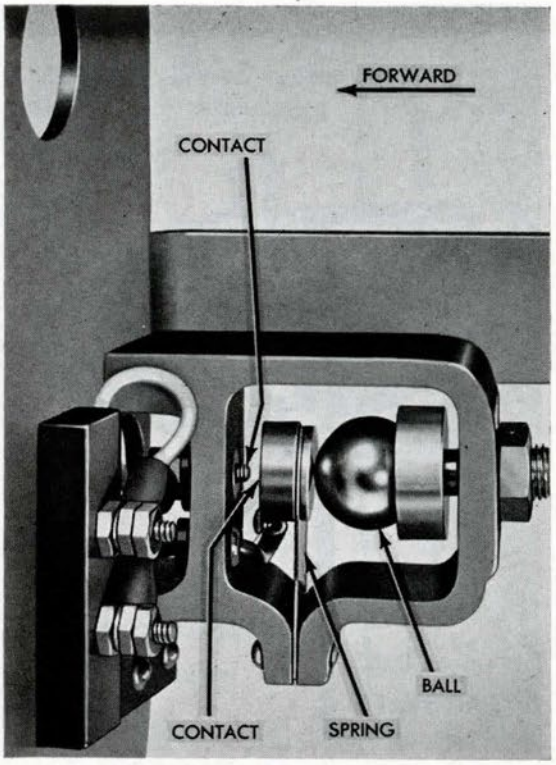

Figure 7B—Exploder Mechanism Mk 6-5—Ball Switch Open

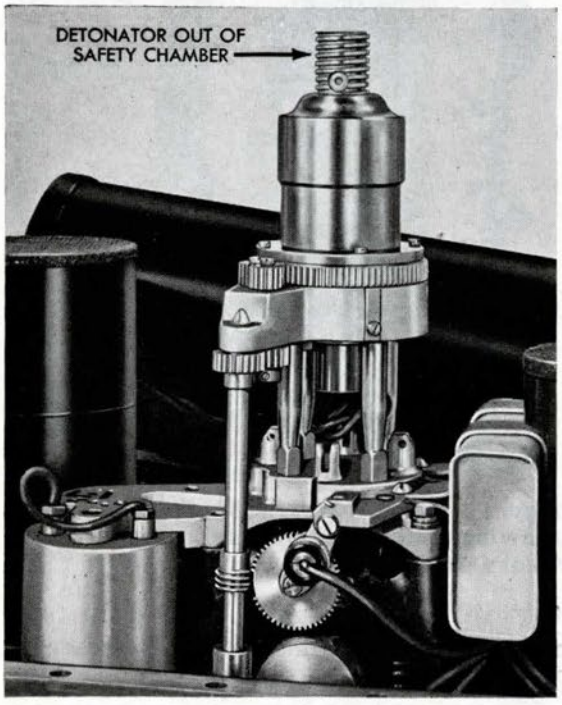

Figure 8A—Exploder Mechanism Mk 6-5—Armed

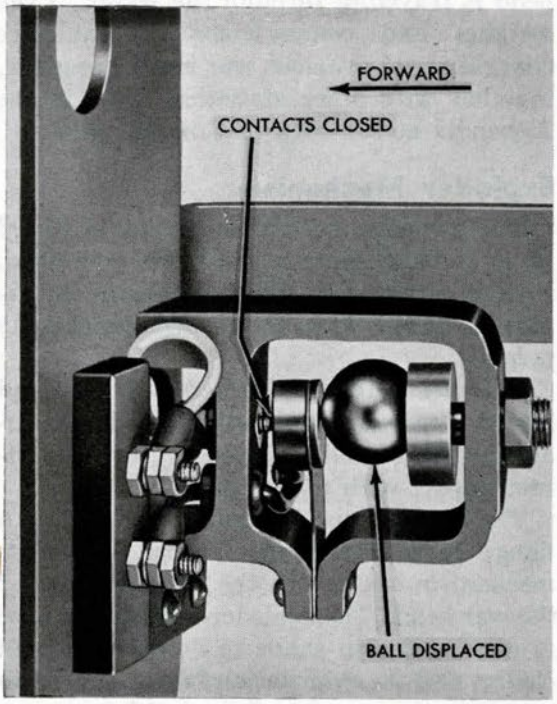

Figure 8B—Exploder Mechanism Mk 6-5—Ball Switch Closed (Fired)

the run and within which it can be fired without detonating the war head.

2. The delay device, composed of a switch which grounds the generator of the exploder mechanism during the first part of the run, thus temporarily preventing current from passing into the condenser and detonator.

A self-cocking impact-operated switch provides the means for firing the detonator upon impact of the torpedo with the target. This impact switch is installed in the exploder-mechanism casing above the exploder mechanism, and is connected by wire leads to the electric terminals of the condenser and the detonator, which are mounted in the exploder-mechanism base.

The operation of the exploder is as follows:

Upon launching of the torpedo the impeller of the exploder begins to rotate. The rotation of the impeller drives a gear train (Fig. 7A) which rotates the delay-device worm wheel and the arming gear. The delay device renders the generator inoperative by grounding its field circuit until the delay wheel has made nearly a complete revolution, at which time the wheel stops, breaking the ground, thus activating the field circuit and allowing the generator to build up operating voltages. In the meantime the rotation of the arming gear has run the detonator up out of the safety chamber into the booster cavity (firing position). The generator charges the large condenser, mounted on the firing-mechanism base plate, which supplies the electrical energy necessary for firing the electrical detonator.

Upon impact with the target, the ball in the impact switch (Fig. 8B) is displaced, and as a result the spring contact of the switch is forced down, making electrical contact with the fixed contact. As soon as electrical contact is made, the condenser is discharged through the electric detonator (Fig. 8A), setting it off, thus detonating the booster and the main charge in the war head.

Note: The exploder mechanisms are issued to the service with a pick-up coil and thyratron tube installed on their base. These devices are applicable to the influence feature only and will not be described in this publication.

Booster

Above the exploder mechanism, when installed in the war head, is a thin sheet-copper container holding a charge of tetryl. This is known as the booster. It is so shaped that it fits inside the pocket at the top of the exploder casing, and rests snugly upon the top of the safety chamber.

The detonator, during the arming operation, is moved up out of the safety chamber into a recess in the bottom of the booster; thus, the detonation of the detonator can set off the booster. Before the exploder is fully armed, the detonator holder is within the safety chamber, where it can explode without detonating the booster. It is not until the detonator holder is well extended from its safety chamber that it can detonate the booster; thus any accident which might cause the detonator to explode while the torpedo is still aboard, or close to its firing vessel, cannot cause detonation of the war head, since the torpedo must travel about 350 yards through the water before the detonator can fire the booster.

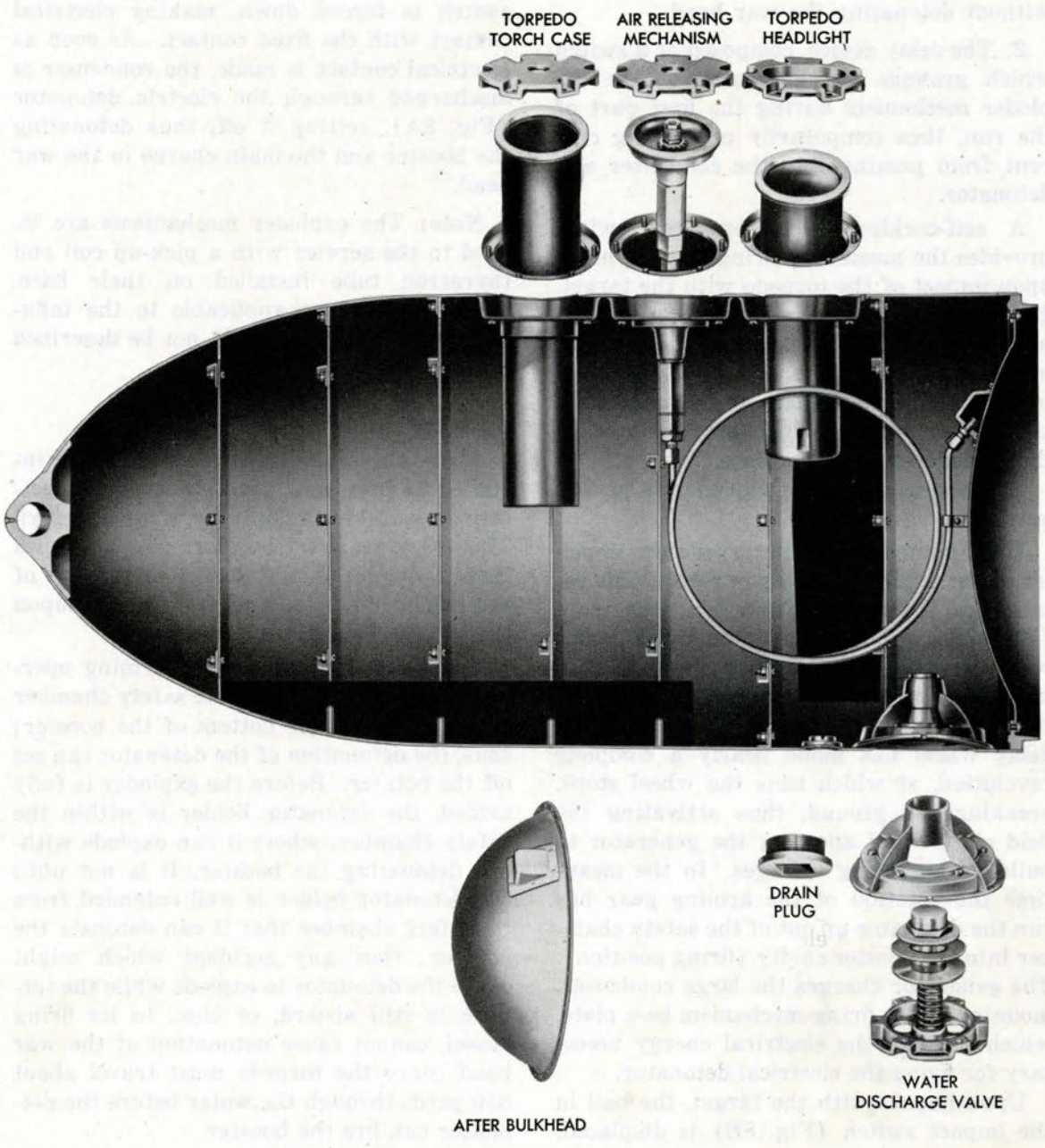

Figure 9—Exercise Head Mk 30-4—Cut-away view, including the various parts which assemble into it

Chapter 2 — Section 2

THE EXERCISE HEAD

General Description

All torpedoes must be given a proving run before being sent into service. In addition, target practice is essential for training purposes and for perfecting skill in launching torpedoes. Therefore, the exercise head has been designed to replace the war head when a torpedo is being given a proving run or is being used for target practice.

The exercise head, shown in cut-away in Fig. 9, is similar to the war head in general appearance. It does not carry the explosive charge, however; and only the Exercise Heads Mk 30-2 and Mk 30-3, which are used for special purposes, carry the exploder mechanism. Water ballast, or a chemical solution, is used in the exercise head to obtain trim characteristics similar to the war head.

The exercise head is so designed that, as the torpedo nears the end of its run, the liquid ballast is expelled by air forced into the head from the air flask.

The expulsion of ballast makes the torpedo buoyant, thus causing it to rise to the surface, where it floats until retrieved.

Exercise Head Details

The exercise head, shown in Fig. 9, has the same dimensions and trim characteristics as the war head. It contains the air-releasing mechanism, by means of which air for expelling the water ballast is admitted at the end of the run; the discharge valve (or valves), through which the liquid ballast is expelled; the torpedo headlight, which is used for night practice; and the torch case, which contains chemicals that burn when in contact with water. The torch, however, should not be used when firing from submarines, because of the possibility of premature ignition and consequent emission of dangerous fumes within the ship.

Exercise heads designated for the Torpedoes Mk 14 and Mk 23 Types are the Exercise Heads Mks 30, 30-1, 30-2, 30-3, and 30-4. The shells for the Heads Mks 30, 30-1, and 30-4 are drawn steel, with ogival nose sections and cylindrical after portions. The shell for the Exercise Heads Mk 30-2 and Mk 30-3 differs from the Heads Mk 30, 30-1, and 30-4, in that it is made of phosphor bronze, and is fitted for installation of an exploder mechanism and a device known as the "marker bomb", which will be described later.

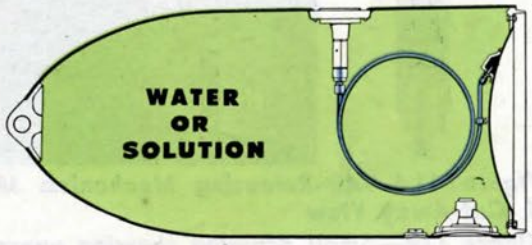

Figure 10A—Exercise Head—Water-Expulsion Feature—Ready for a Run

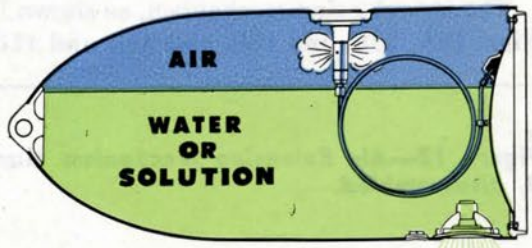

Figure 10B—Exercise Head—Water-Expulsion Feature—Water being expelled

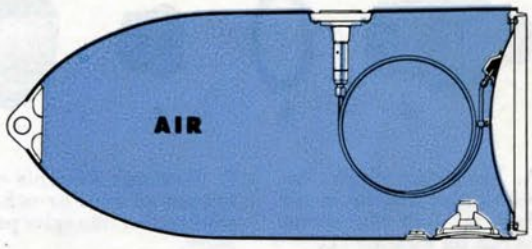

Figure 10C—Exercise Head—Water-Expulsion Feature—Head Blown

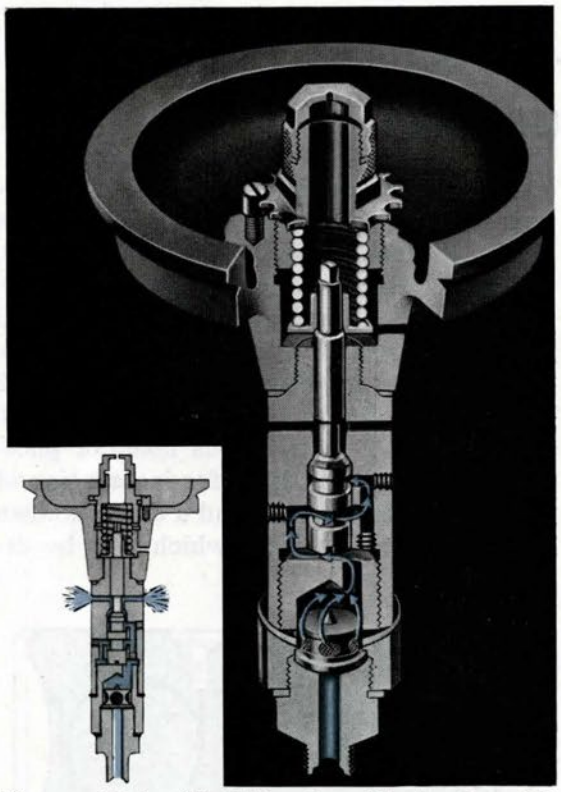

Figure 11A—Air-Releasing Mechanism Mk 3, Cut-Away View

Figure 11B—Small drawing showing operation

Air-Releasing Mechanism

The air-releasing mechanism, as shown in Figs. 10A, 10B, and 10C, also 11A and 11B, operates by **falling** rather than by increasing air pressure. The valve may be set so the air-releasing spring will expand against air pressure ranging from 600 to 400 p.s.i.

Compressed air at flask pressure holds the valve on its seat until, as the torpedo completes its run, the pressure in the flask drops to the pressure for which the air-releasing mechanism is set. At this pressure, the air-releasing spring expands and, in so doing, opens the valve, thereby allowing air from the air flask to pass through the escape ports into the exercise head, as shown in Fig. 11B.

The Air-Releasing Mechanism Mk 3, shown in Fig. 11A, is automatic, the valve being cocked when air at full flask pressure is admitted to the air-releasing mechanism. In the Air-Releasing Mechanism Mk 2, the valve must be cocked by hand; otherwise the operation and adjustment are the same as with the Mechanism Mk 3. The method of cocking the Mechanism Mk 2 is given in the chapter on adjustments and tests.

The parts of the Air-Releasing Mechanism Mk 3 disassembled are shown in Fig. 12. Studying these parts and comparing them with the cut-away views shown in Figs. 11A and 11B gives a clearer understanding of the construction and operation of the air-releasing mechanism.

Figure 12—Air Releasing Mechanism Mark 3, disassembled.

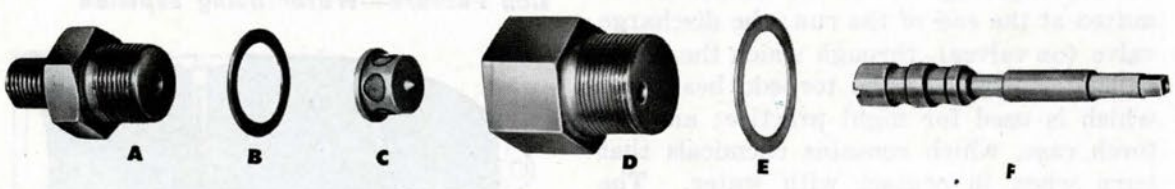

A. Restriction nipple: Receives pipe leading in air from air flask also serves as rest for strainer "C."

B. Washer; Fits between parts "A" and "D."

C. Strainer: Prevents entrance of grit or other solid matter into valve passages.

D. Strainer holder: Shoulder of strainer "C" rests against machined seat in strainer holder; hole drilled off center in strainer holder body conveys air into valve casing "G."

E. Washer: Fits between parts "D" and "G."

F. Valve, valve stem and pistons: Machined in one piece, this inserts into valve casing "G," and engages air releasing spring support.

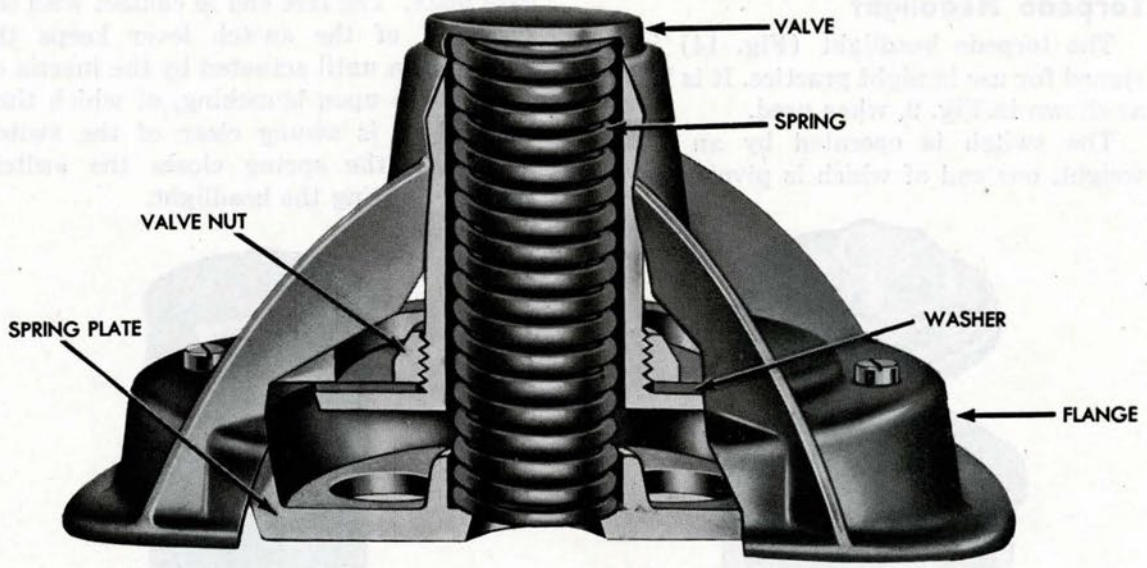

Figure 13—Discharge Valve, Cut-away view

Discharge Valve

The discharge valve (Fig. 13) is located as shown in Fig. 9. The valve operates automatically, opening when the pressure inside the exercise head exceeds the combined spring and external water pressure holding the valve closed. In other words, when the air pressure in the air flask falls to the set pressure, the air-releasing mechanism admits air into the exercise head, and the resulting pressure in the head forces the discharge valve open.

The valve opens outwardly, expelling the liquid ballast, and closes when the ballast has been entirely expelled and the air pressure in the exercise head has dropped below the minimum necessary to hold the valve open.

G. Valve casing: See Fig. 11A for interior construction. Upper and lower portions are screwed and sweated together and are treated as one unit. (Note: Beveled seat on under side of valve casing is undercut to hold gasket in alignment. Centering ring shoulders against flange, preventing canting of valve.)

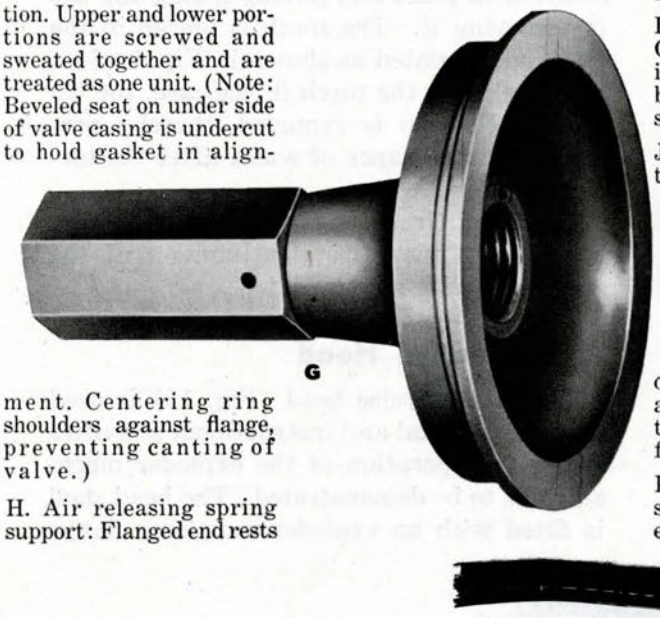

H. Air releasing spring support: Flanged end rests against shoulder on valve stem "F."

I. Air releasing spring: Compression type; may be installed with either end based on air releasing spring support.

J. Adjusting nut: Turns to right or left to increase or decrease compression of air releasing spring "K" through pressure range from 600 to 400 pounds.

K. Adjusting nut lock screw: Must be backed out entirely before nut "J" can be turned, and replaced firmly when adjustment is completed.

L. Washer: Fits between parts "J" and "M."

M. Adjusting nut cap: protects valve stem "F" from accidental handling or damage, and is vented to prevent banking up of any air which may pass valve stem; also vents water due to expansion.

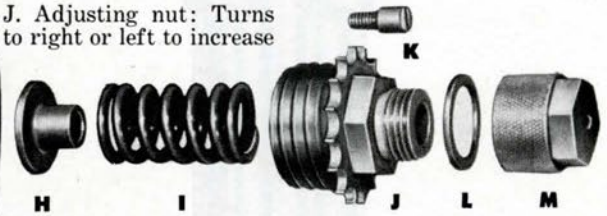

Torpedo Headlight

The torpedo headlight (Fig. 14) is designed for use in night practice. It is located as shown in Fig. 9, when used.

The switch is operated by an inertia weight, one end of which is pivoted on the base plate. The free end in contact with the free end of the switch lever keeps the switch open until actuated by the inertia of the torpedo upon launching, at which time the weight is swung clear of the switch lever and the spring closes the switch, thereby lighting the headlight.



Figure 14—Torpedo Headlight



Figure 15—Torpedo Torch

Torpedo Torch

The torpedo torch (Fig. 15) is used in daytime practice. It contains calcium phosphide, which burns when it becomes mixed with water. This chemical is in a container having a small hole in the upper side, the hole being sealed with a tin strip soft-soldered in place and having a ring for use in removing it. The torch is placed in the torch case, located as shown in Fig. 9. Just before placing the torch in the case, the tin seal on the top is removed, thereby permitting the entrance of water after the torpedo is launched.

Caution: Great care must be taken in handling to insure against contact of the chemicals with moisture.

War Exercise Head

The war exercise head (Fig. 16) is used for experimental and instructional activities where the operation of the exploder mechanism is to be demonstrated. The head shell is fitted with an exploder mounting flange

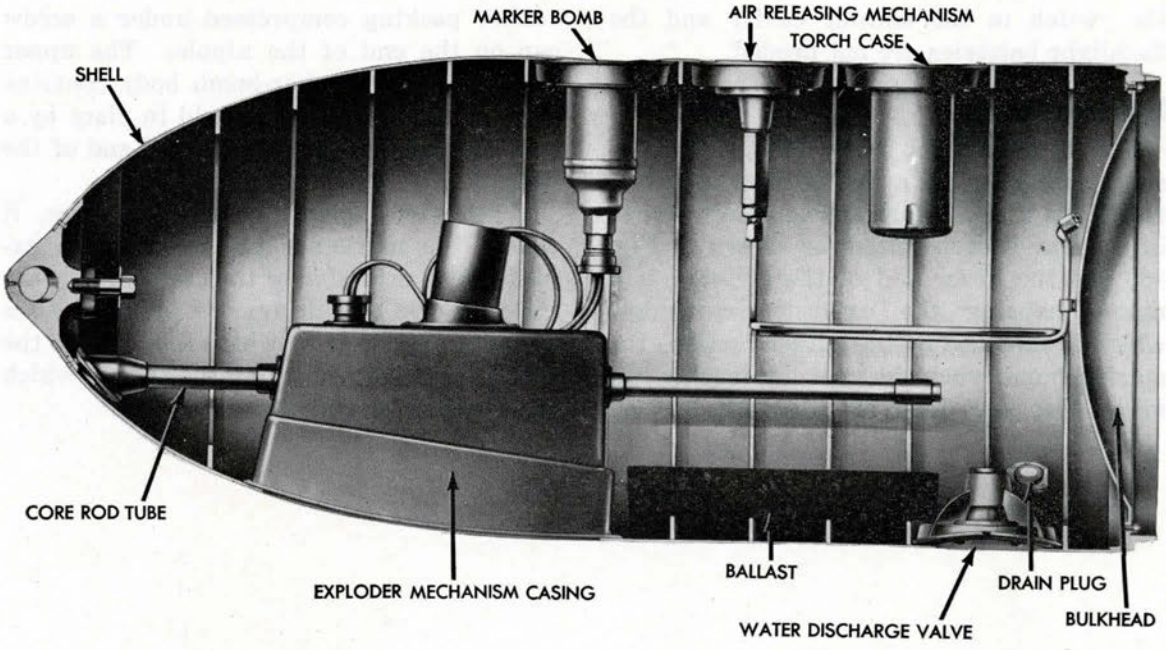

Figure 16—War Exercise Head Mk 30-3, Cut-Away View

and casing similar to those in a war head, with the exception that the exploder casing is necessarily heavier because of the pressure built up in the head when it blows.

In the booster cavity of the exploder casing, a switch, operated by the firing pin of the exploder mechanism, is installed. When the exploder mechanism fires, its firing pin closes the switch, thus allowing current from two flashlight batteries to flow to the marker bomb, causing it to fire. When exploders using electric detonators are used in the war exercise heads, the marker bomb is connected into the exploder circuit in

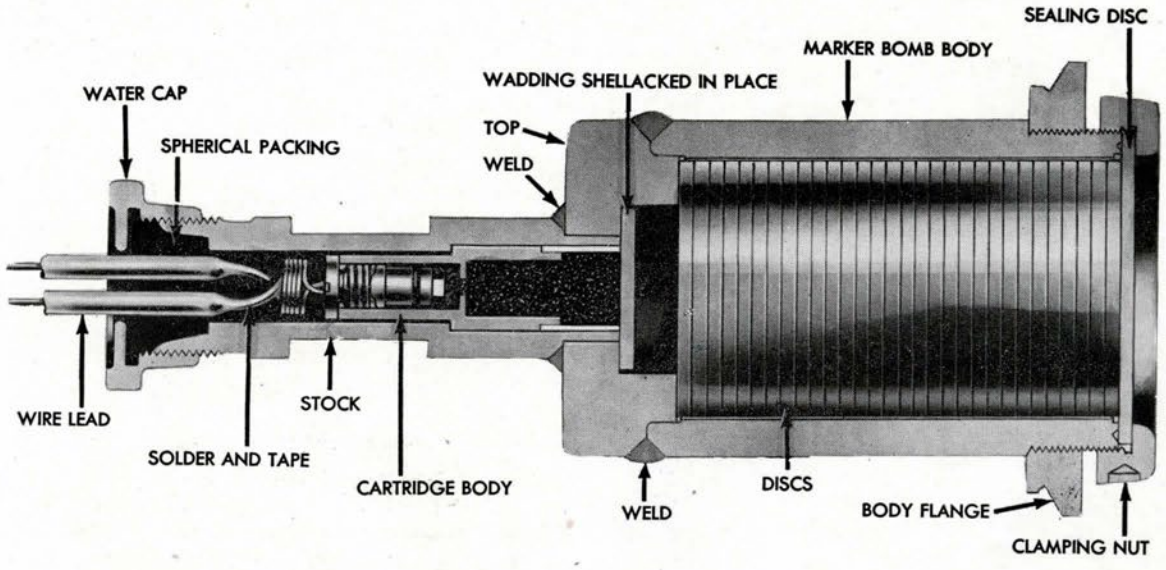

Figure 17—Marker Bomb for Exercise Head Mk 30-2 or Mk 30-3, Cut-Away View

place of the electric detonator. In this case, the switch in the booster cavity and the flashlight batteries are not needed.

Marker Bomb

The marker-bomb body (Fig. 17) consists essentially of a heavy steel cylinder, which fits into the forward accessory flange in the war exercise head, as shown in Fig. 16. On the lower end of the cylinder is a nipple housing the explosive cartridge, which is exploded by the current sent to the marker bomb when the exploder mechanism fires. The leads from the cartridge are led out of the marker bomb through watertight rubber packing compressed under a screw cap on the end of the nipple. The upper portion of the marker-bomb body contains a series of plywood discs held in place by a lead disc secured to the outboard end of the body by a ring nut.

When the exploder mechanism fires, it causes the marker-bomb cartridge to explode. The explosion of the cartridge shears the lead disc and drives the plywood discs out of the body, after which they rise to the surface and float, marking the spot at which the exploder mechanism fired.

Chapter 3

THE AIR-FLASK SECTION

General Description

The air-flask section (Figs. 18 and 19), combines the air compartment, the water compartment and fuel flask, and the midship section. It is the main body of the torpedo, and may be called the "boiler room" of the torpedo. Herein are contained the compressed air, the fuel, and the water, which release the energy necessary to drive the mechanisms which propel and guide the torpedo.

The forward, and by far the greater, portion of the air-flask section (see Fig. 18) is in reality a storage tank for high-pressure air. Air alone, however, can not propel the torpedo for any useful distance at a sustained speed; but by combining the air with a highly volatile fuel and with water, in predetermined proportions, a gas and steam mixture is produced, which provides sufficient energy to propel the torpedo at its designated speed and range.

Immediately adjoining the air compartment, at its after end, is the water compartment, which also contains the fuel flask.

The midship section consists of the portion at the extreme after end of the air-flask section, where the air-flask section joins the afterbody, as shown in Fig. 18. This midship section provides a space for housing and cooling the parts which convey the hot gases to the turbines to supply the power for propelling the torpedo. Openings are provided in the midship-section shell for access to and adjustment of the parts therein.

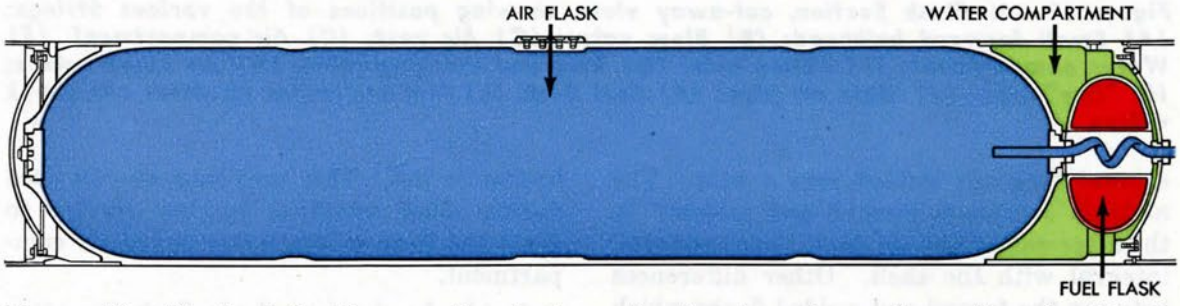

Figure 18—Air Flask Section, sectional view, showing in colors where the air (blue), water (green), and fuel (red) are stored

The flow of air, water, and fuel from their respective compartments in the air-flask section to the operating mechanisms which are contained in the afterbody of the torpedo, is shown in the schematic diagram, Fig. 3, on pages 12 and 13.

Air-Flask Section Detail

The air-flask section is cylindrical in shape, and of uniform outside diameter throughout its length. However, a smaller inside diameter at the guide stud location provides the necessary additional thickness

of the shell at this point for launching support.

The air flasks are of two types: the **forged** flask and the **welded** flask. The welded type is now being manufactured exclusively.

The **forged** air flask is a cupped and drawn alloy steel forging, cylindrical in shape. To its after end is riveted and soldered the midship section, which thus becomes an integral part of the air-flask section. The **welded** air flask is made up of several forgings welded into a unit. The midship section is riveted and soldered to the after end of the air flask, thus becoming integral with the shell. Other differences between the forged and welded flasks which should be noted are as follows:

1. (a) Instead of the large removable forward bulkhead characterizing the forged air flask, the **welded** air flask has a forward bulkhead dome integral with the shell, and a small removable forward bulkhead.

2. (b) In the **forged** air flask, air passes from the flask to the blow valve by way of a nipple screwed and sweated into the forward bulkhead ring, and a pipe screwed into the nipple. In **welded** air flasks, air passes from the flask to the blow valve by way of a nipple screwed and sweated into the forward bulkhead dome (on the vertical center line) above the small bulkhead, and a pipe secured to the nipple by means of a nut.

3. (c) During the hydraulic test on air flasks (which is not a service test) the forged air flask can be rotated until the nipple for the blow valve pipe is high enough to vent all air out of the flask when water is introduced for the pressure test. In the case of the welded air flask, however, during the hydraulic test the flask cannot be rotated in such a way that the air-outlet elbow for the blow valve is high enough to vent all air out of the flask when water is introduced; therefore, it was necessary to provide a vent on the top center line of the flask near the forward end to vent the air during the hydraulic test. This vent may also be used during flask overhaul by the service to drain the flask of any water in the air compartment.

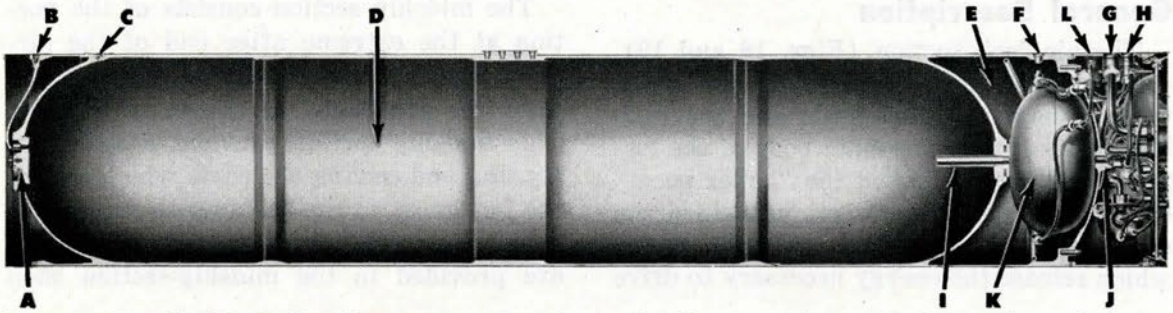

Figure 19—Air-Flask Section, cut-away view, showing positions of the various fittings: (A) Small forward bulkhead; (B) Blow valve; (C) Air vent; (D) Air compartment; (E) Water compartment; (F) Filling hole; (G) Stop and charging valve; (H) Air check valves; (I) "Dry" pipe; (J) Main air pipe; (K) Fuel flask; (L) Fuel and water strainers and check valves

4. (d) In the forged air flask the after bulkhead is screwed into place against a ground seat. In the welded air flask the after bulkhead is integral with the flask shell.

Air Compartment

The air compartment, as shown in Figs. 18 and 19, is enclosed at both ends by dome-shaped heads. In the **welded** air flask both heads are integral with the air flask shell. In the **forged** air flask both ends of the air compartment are closed by dome-shaped bulkheads, held in place on ground seats by screws in the case of the forward bulkhead, and by threads on its outer rim in the case of the after bulkhead. Both bulkheads are held more securely on their seats by the air pressure in the flask.

Two flat surfaces machined on the diameter permit the bulkhead to be inserted, in the horizontal plane, into two slots cut in the bulkhead ring of the flask, with the aid of two lifting eye bolts. The small forward

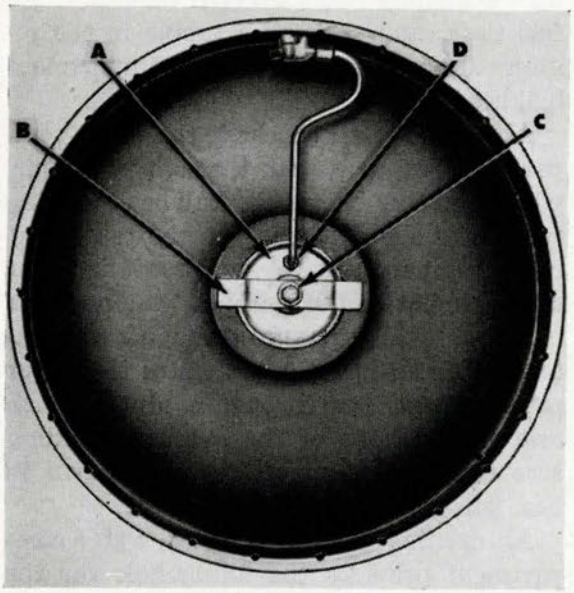

Figure 20—Forward Bulkhead of Welded Air Flask, showing (A) Small forward bulkhead installed in center; (B) Clamp; (C) Lock nut; (D) Nipple

bulkhead of the **welded** flask (Fig. 20) is installed and removed in the same way as the bulkhead for the forged flask, but it is held in place by means of a locating clamp, stud, and lock nut, shown in Fig. 21.

No lifting eye bolts are needed for manipulating the small bulkhead.

When inserting the small bulkhead, the two flat sides of the bulkhead pass through slots in the seat; then it is turned so that the flat sides are seated clear of the slots.

In both types of air flask, air is led into the air compartment, during charging, by way of the stop and charging valve, to be described later, through the main air-connection pipe, and the dry pipe. After charging, air is led from the air compartment through the dry pipe, the main air-connection pipe, and the stop and charging valve to the starting and reducing valve and the super-heating system. A central nut and nipple secure the forward end of the main air pipe to the after bulkhead. Another central nut and nipple secure the after end of the main air-connection pipe to the water compartment bulkhead.

The dry pipe is provided to prevent water or oil from running into the main air-connection pipe when the torpedo is floating vertically at the end of an exercise or practice run. It is fitted and brazed into the nipple in the after bulkhead.

The main air-connection pipe is coiled to allow for relative expansion and contraction in the air and water compartments.

Blow Valve

The blow valve, shown in Figs. 22A and 22B, is located at the upper central part of the forward bulkhead, as shown in Fig. 20, and releases air from the air flask to the air-releasing mechanism of the exercise head. It is manipulated from the exterior of the air flask shell.

The free end of the pipe leading from the blow valve connects with a nipple in the pocket on the after bulkhead of the exercise head. (See Fig. 9.)

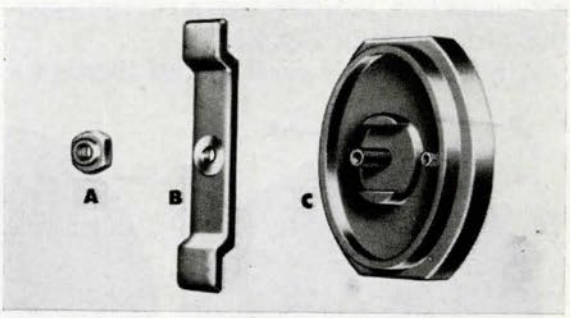

Figure 21—Small Forward Bulkhead, removed—(A) Lock nut; (B) Clamp; (C) Small forward bulkhead; note "flats" for passage through slots in seat.

Water Compartment

The water compartment is forged integrally with, and is located immediately abaft, the air compartment (see Figs. 18 and 19), and is closed at its forward end by the after bulkhead of the air compartment. At its after end, the water compartment is closed by the water-compartment bulkhead, which is held against a ground ring seat at its after end.

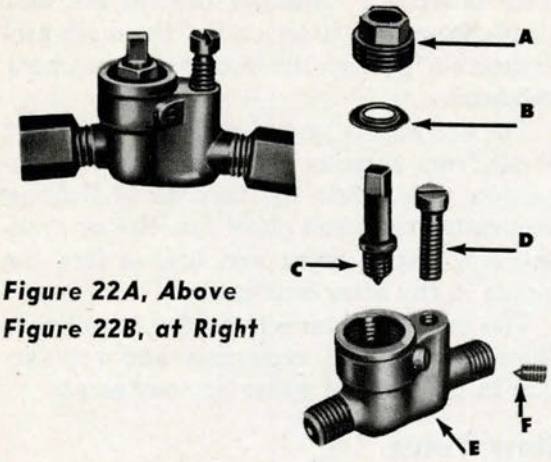

Figure 22A, Above
Figure 22B, at Right

Figures 22A and 22B—The Blow Valve, which releases air from air flask to air-releasing mechanism of exercise head, assembled and disassembled—(A) Retainer; (B) Washer; (C) Valve; (D) Holding screw; (E) Valve body; (F) Set screw.

In addition to sealing the water compartment, the water compartment bulkhead supports the fuel flask by four brackets attached to its inner surface, as shown in Fig. 23. It also provides an avenue for the main air-connection pipe through a central opening, also shown in Fig. 23.

Air from the air checks is led through a nipple in the reinforced portion of the water compartment bulkhead to a pipe leading to the top of the fuel flask; and the fuel is forced from the fuel flask to the fuel and water checks, by air pressure, through a pipe extending down into the bottom of the fuel flask, and through a nipple in the reinforced portion of the water-compartment bulkhead.

Air from the air checks to the water compartment is delivered through a nipple, which replaces one of the bulkhead holding screws, to a pipe leading to the top of the water compartment. Water from the water compartment to the fuel and water checks is forced by air pressure through a pipe extending down into the bottom of the water compartment, and through a nipple which also replaces one of the bulkhead holding screws. These connections are shown in Fig. 24.

An opening in the top of the water compartment provides the filling hole for the water (see "F" in Fig. 19), and also access to the filling plug for the fuel flask. When filling, the plug is removed from the filling hole in the top of the water compartment; then the plug is removed from the fuel

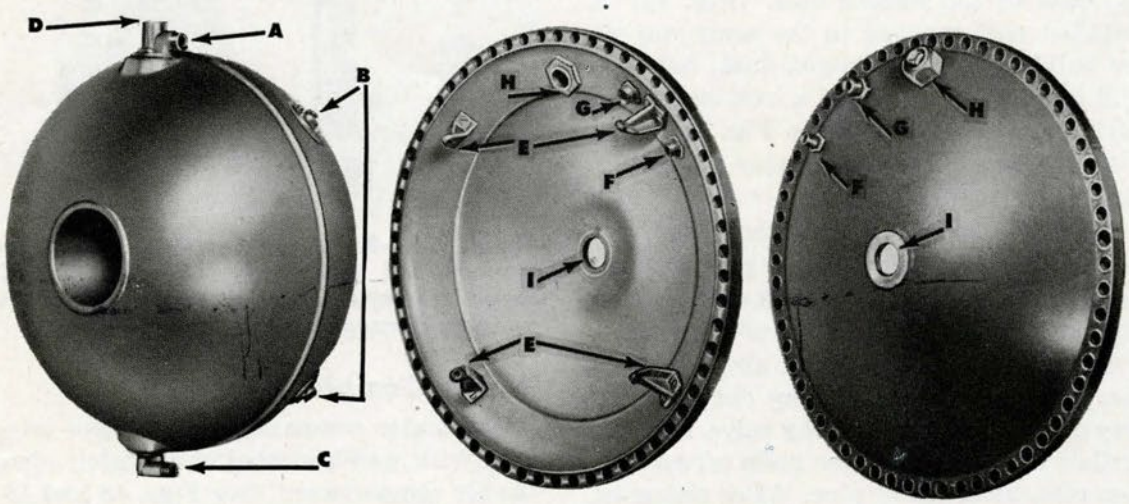

Figure 23—The Fuel Flask (at left), and the Water-Compartment Bulkhead. The right and center views show the inner and outer faces of the water-compartment bulkhead. (A) Nipple for air to fuel flask; (B) Bosses for mounting fuel flask on water compartment bulkhead brackets; (C) Nipple for fuel to fuel strainer and check valve; (D) Fuel-filling hole; (E) Fuel-flask brackets; (F) Nipple for pipe to fuel strainer and check valve, connects with "C"; (G) Nipple for pipe from air check valve, connects with "A"; (H) Blow-out plug and nipple; (I) Opening for main air pipe.

flask. The flask is filled, the plug replaced; then the water compartment is filled.

To protect against corrosion, the interior surfaces of the forged air flask are electroplated with cadmium. The interior surfaces of the welded air flask are coated with a baked phenolic resinoid coating.

Blow-Out Plug

To guard against destructive pressure, which might be built up in the water compartment by the absolute failure of the reducing valve, or to a rupture in the main air line passing through the water compartment, a blow-out plug (Fig. 25) is provided. The blow-out plug is located on the upper portion of the after face of the water-compartment bulkhead. (See "H" in Fig. 23.)

The arrangement of the blow-out plug is such that the plug will blow out at a pressure of about 1200 p.s.i. in the water compartment, thereby providing a seven-eighths-inch clear opening for venting the pressure in the water compartment.

This opening in the water-compartment bulkhead is large enough to pass water at a sufficient rate to prevent a rise of pressure in the water compartment in excess of 1500 p.s.i., even though the main air pipe should rupture.

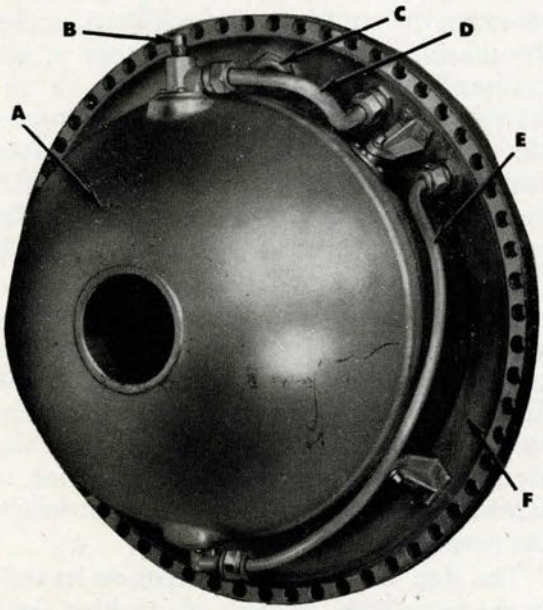

Figure 24—Water Compartment Bulkhead with Fuel Flask Assembled—(A) Fuel flask; (B) Fuel-filling plug; (C) Blow-out plug; (D) Air Inlet pipe; (E) Fuel outlet pipe; (F) Water compartment bulkhead

Fuel Flask

The fuel flask (see Figs. 23 and 24) is constructed in the shape of a thick dough-

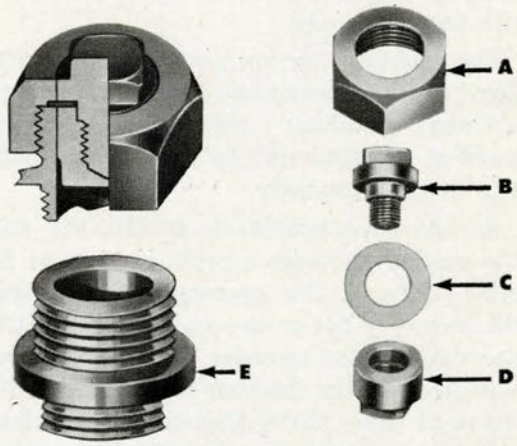

Figure 25—Blow-out Plug, cut-away view, and parts disassembled—(A) Cap; (B) Plug screw; (C) Copper shear disc; (D) Plug nut; (E) Nipple

nut in order to permit its installation in the limited space available in the water compartment. It is formed of brazing brass, and is tested to 50 p.s.i. internal pressure after complete assembly with fittings. The filling flange is located on top of the flask, so that it is directly under the water-filling flange, thereby giving access through the water-filling hole for removing and replacing the fuel-filling plug, and for filling the fuel flask.

The air-inlet connection is located in the same fitting body as the fuel-filling plug, and enters the top of the flask as shown in Fig. 24. The fuel outlet connection is located at the bottom of the flask, a perforated tube being provided to strain out large foreign particles. The air-inlet and the fuel-outlet nipples are connected by pipes to their respective nipples on the interior of the water compartment bulkhead, as shown in Fig. 24.

Midship Section

The midship section (see Figs. 18 and 19), which is a forged steel ring, is, as has been stated, an integral part of the air-flask section, being riveted and soldered to the after end of the air-flask in both the forged air flask and the welded air flask. In both cases it becomes a permanent part of the air-flask section shell. The after end of the midship section is machined to form a joint with the afterbody.

The midship section consists of a ring, closed at its forward end by the water compartment bulkhead (see Fig. 19), and closed at its after end by the turbine bulkhead of the afterbody.

As has been previously stated, the midship section provides a cooling chamber for those parts of the operating mechanisms which convey hot gases, and which must be externally cooled in order that they will not be injured by the interior temperature. The nature of these parts, therefore, as with all other parts found in the midship section, does not require the exclusion of water from their exterior surfaces. Hence, the midship section has openings which admit sea water and permit it to circulate freely through the section and around the parts which require cooling.

Openings in the midship section also provide access for adjustment or manipulation of certain parts which are enclosed in the midship section. Among these parts are included those attached to the turbine bulkhead, which is the forward bulkhead of the afterbody, and which are known as the valve group and superheater. These will be described in the next chapter.

The shell of the midship section is marked at each opening, indicating the parts to which access may be gained, these parts being the following: (a) stop and charging valve; (b) air checks; (c) fuel and water strainers and checks; (d) air-vent pipe access opening for the vent fitting; (e) speed-setting mechanism; (f) main air connection; (g) air connection to air check valve body; (h) fuel and water connections to fuel and water check valve and strainer body; (i) igniter; (j) air connection to igniter.

Major Fittings Attached to the Midship Section

The stop and charging valve body, the air check valve body, the fuel and water check valve and strainer body, the speed-setting bracket, and the vent fitting, are all attached to the shell of the midship section, being held in place by screws, so they can be readily removed. These parts, with connecting pipes, are shown in Figs. 26A and 26B.

Fig. 27 is a view of the midship section topside, showing the valves and fittings in place, attached to the shell.

Stop and Charging Valves

The stop and charging valves are contained in one body, and are located at the top of the midship section, as shown in Fig. 19, and at (D) and (E) in Fig. 27. They are attached by screws to the top of the midship section shell, but connect with the main air pipe leading through the water compartment bulkhead.

The charging valve provides a means for charging the air flask. A check valve under the charging valve prevents leakage of air outboard when the charging line is removed. The stop valve is operated manually and isolates the air in the air flask after charging and until it is ready for use. With the stop valve closed, the afterbody may be removed and overhauled while the air flask remains fully charged.

A cut-away view of the stop and charging valve body is shown with the parts disassembled in Fig. 28. For charging the air flask, the plug is removed from the charging valve, preventing the escape of air from the air flask. The charging-pipe connection is screwed into the threaded hole from which the plug is removed.

The stop valve closes air-tight on its seat in the valve body. It has a plug which seats in the stop valve body against a washer. This plug has an opening which permits access to the valve-operating spindle for opening or closing the valve. Packing, retained

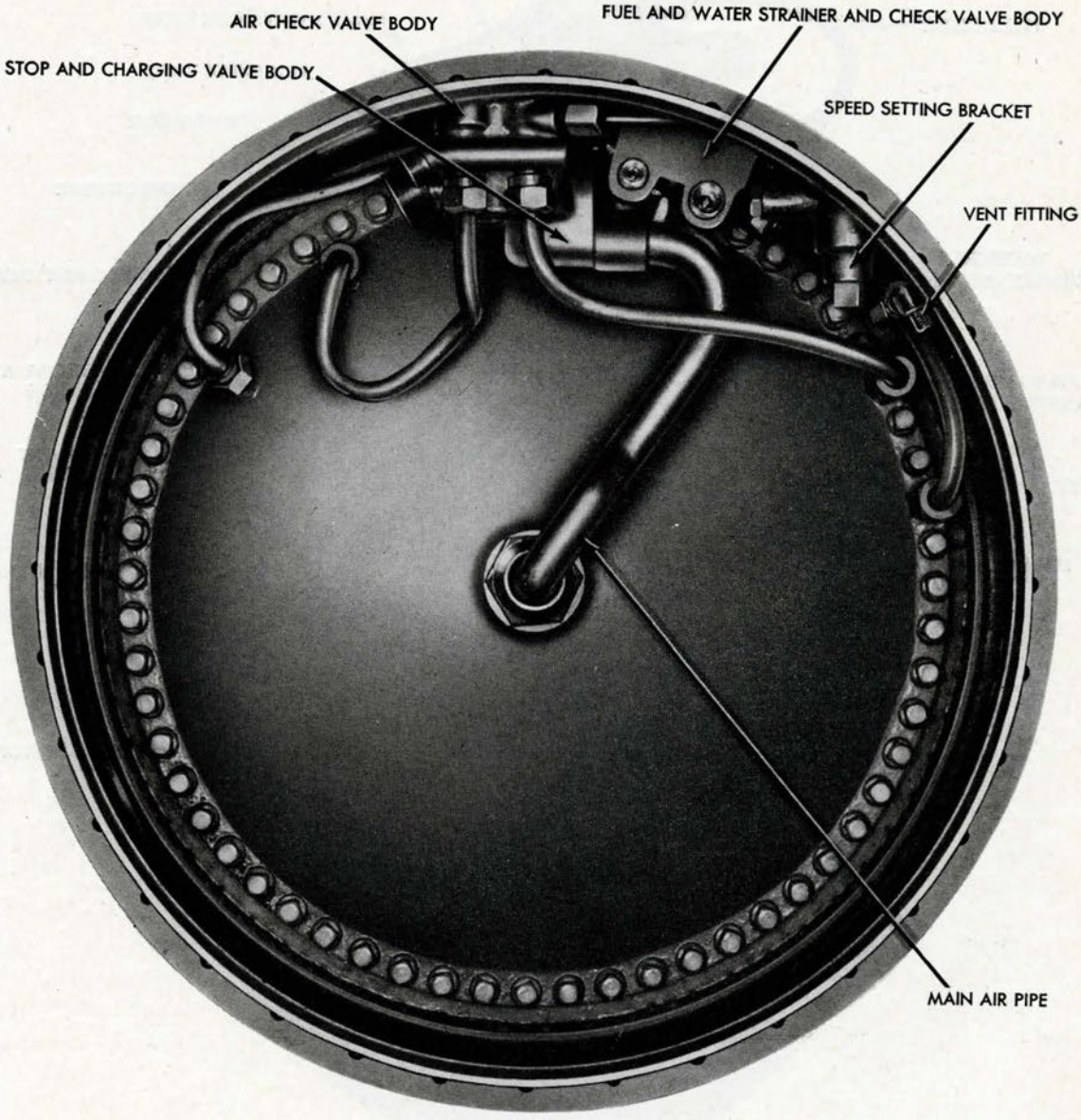

Figure 26A—Valves and Fittings Attached to the Midship Section

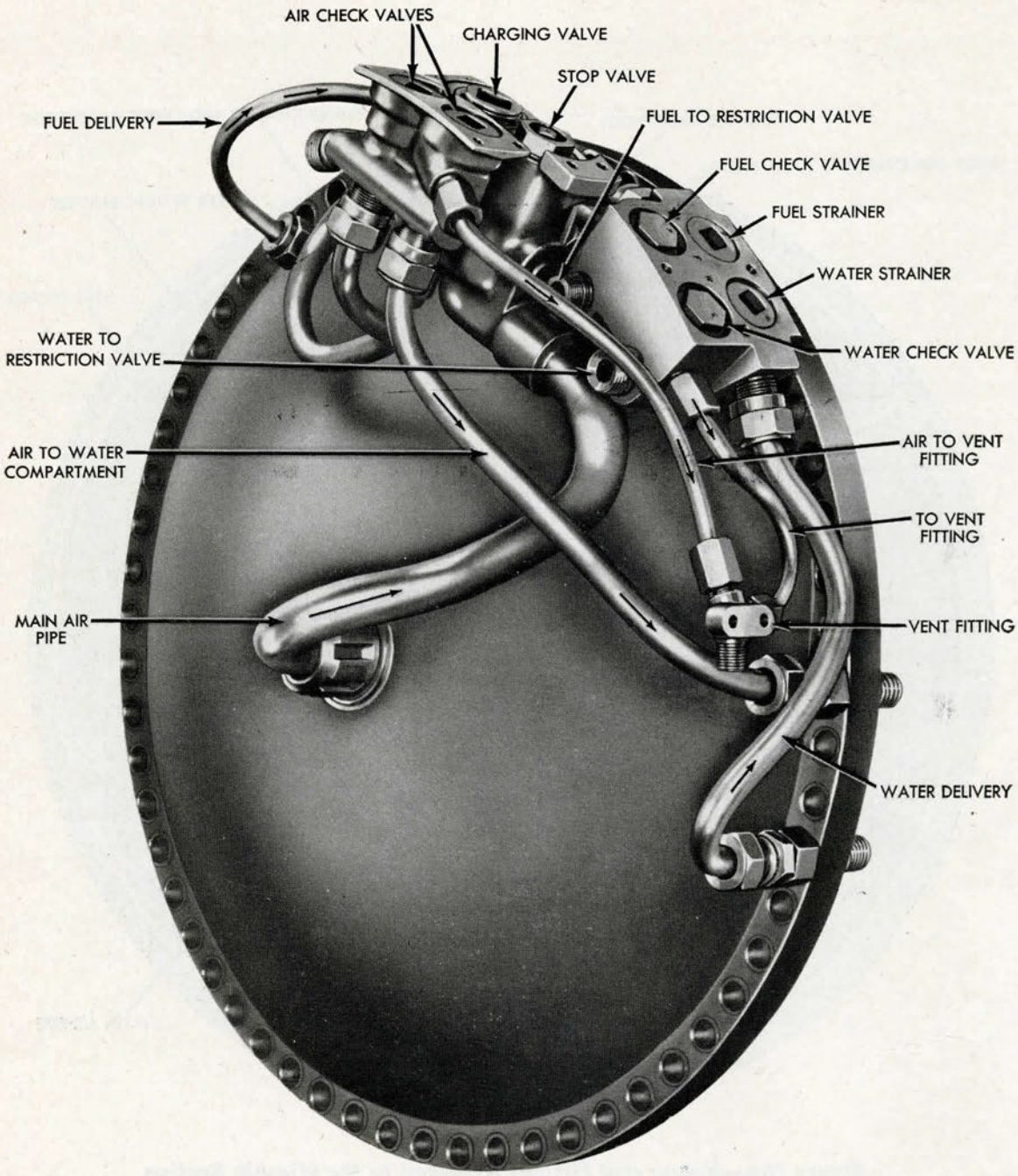

Figure 26B—Valves and Fittings Connected to Water-Compartment Bulkhead

by a gland nut, is provided. The operating spindle is held in place in the plug by a follower which allows freedom of revolution. A square shank at the lower end of the operating spindle fits into the stop valve carrier, in which the stop valve is fitted, by means of two small pins, in such a manner that it is free to rotate but travels with the carrier. Turning the operating spindle screws the carrier up or down, lifting or seating the stop valve.

In charging the air flask, the air passes through the charging valve and stop valve to the main air pipe which leads to the air flask. When the air flask is fully charged, the supply valve is shut off, the stop valve is closed, the charging line is bled and disconnected, and the charging valve plug is replaced.

Air Check Valves

The air check valves are identical in assembly, and are contained in one body (see Fig. 29, which shows a cut-away view as well as the parts disassembled.) They are interposed between the reducing valve and the fuel and water compartments (see Fig. 26B). Their purpose is to close these two compartments against each other, and both compartments against the reducing valve, opening only when the torpedo is in normal operation. The checks also vent pressure caused by air leaks into the water compartment. Were it not for this venting feature, the pressure created by leaks would cause the water delivery check valve to unseat and force water into the combustion flask.

The body of the air check valves is secured by screws to the midship section shell (see "B" and "C" in Fig. 27) aft of the stop and charging valves. In the inlet nipple (see "E" in Fig. 29) is a restriction which checks any sudden flow of air and permits the pressure to equalize on both sides of the fuel flask at the instant of opening, thereby preventing a possible rupture of the fuel flask.

The spaces above the check valve plugs are closed by screw plugs, and are interconnected by an air vent passage, the entire space being vented into the afterbody by a pipe passing to the vent fitting attached to the midship section shell.

Venting of the air check valves is necessary to prevent pressure accumulation above the valve from cushioning the valve or preventing its opening.

Reduced air pressure, upon entering the inlet nipple, will immediately fill the passage around the air check valves and, because the areas of the beveled surfaces of the valves above their seats are larger than the opposing area on the flat seats, will open the valves against the pressure of their springs and hold the valves open until the spring pressure again exceeds the forces tending to open the valves, at which time the valves will close. The air pressure re-

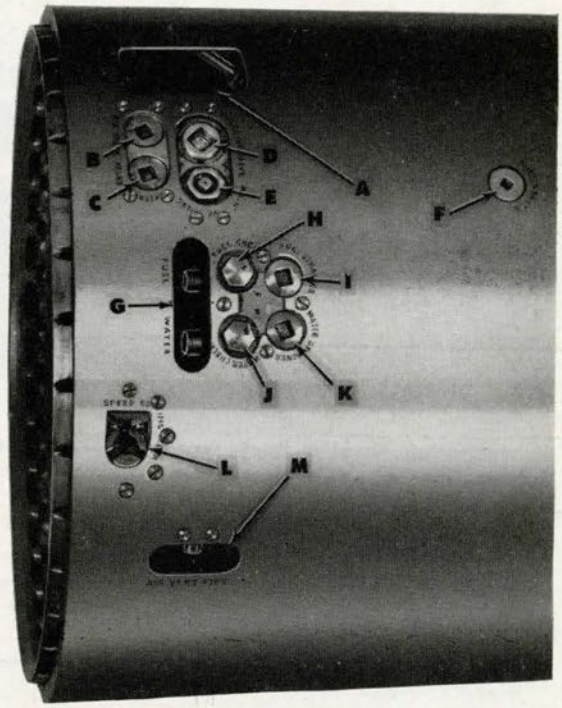

Figure 27—Midship Section, Top View. (A) Access hole, permits connection of air pipe to air check valves and main air connection to air flask after assembly of afterbody to air flask; (B) Fuel air check valve; (C) Water air check valve; (D) Charging valve; (E) Stop valve; (F) Water-filling plug, when removed, gives access to fuel filling plug; (G) Access hole to fuel and water connections; (H) Fuel check valve; (I) Fuel strainer; (J) Water check valve; (K) Water strainer; (L) Speed-setting mechanism; (M) Access hole to vent fitting.

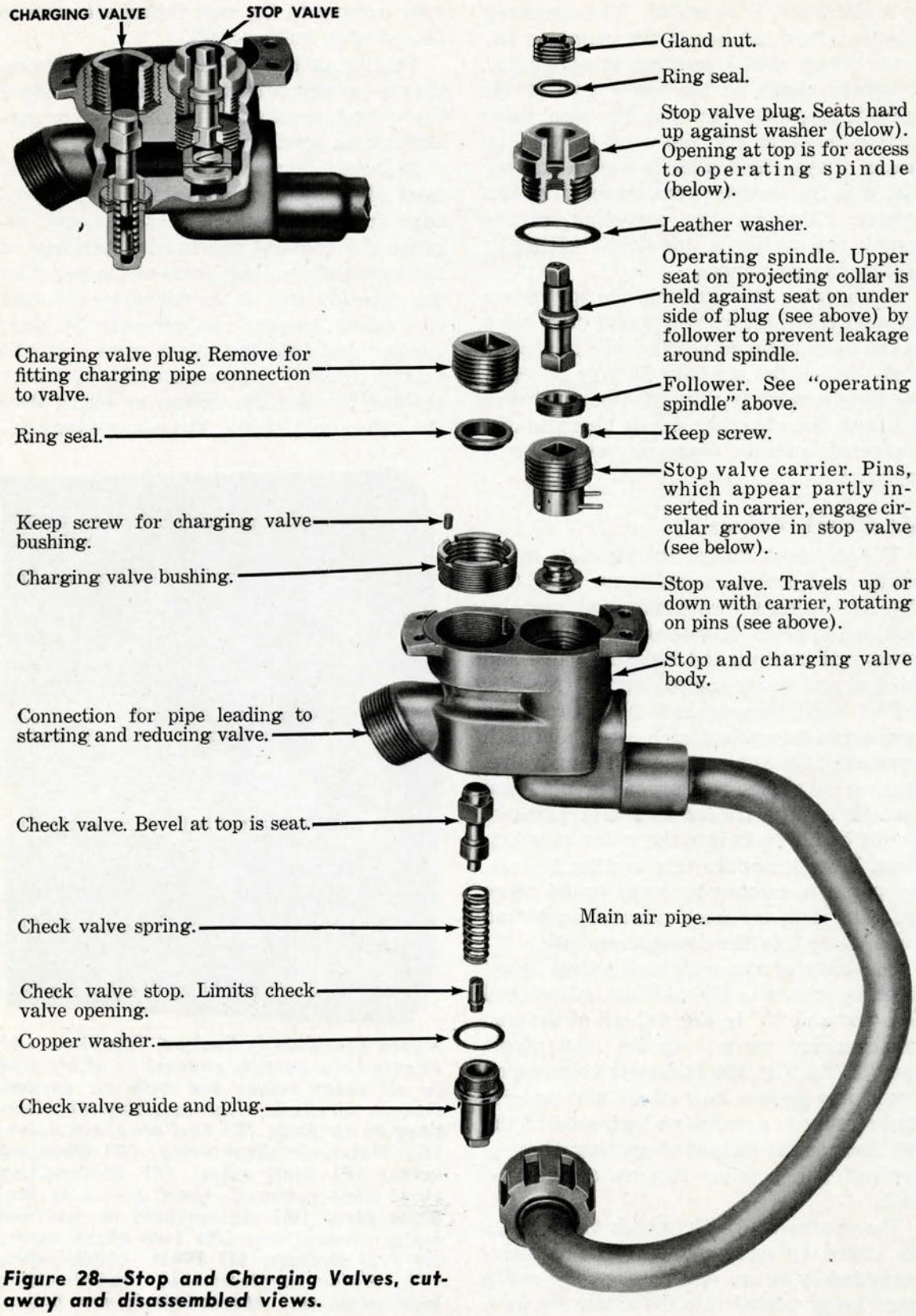

Figure 28—Stop and Charging Valves, cutaway and disassembled views.

quired to unseat the valves when acting against the beveled area above the valve seat is 10 to 12 p.s.i.

The air check valves may also be considered as relief valves, in that any pressure accumulated in the fuel or water compartment in excess of five to six p.s.i. will act against the areas under the air check valve seats. This unseats the valves and relieves such pressure through the restriction valve and combustion flask.

The air is conveyed from the air check valves through pipes connecting through the water compartment bulkhead to the top of the fuel and water compartments.

Vent Fitting

The vent fitting (see Fig. 26B) is attached by screws to the midship section shell, as shown in Fig. 27, and is located on the starboard side. It receives any leakage of air from the outboard seats of the fuel and water check valves, and any leakage of air from the outboard side of the air check valves, venting this leakage into a pipe connecting with the afterbody.

Fuel and Water Strainers and Check Valves

The fuel and water strainers and check valves (Fig. 30) form a group of four units

Figure 29—The Air Check Valves, cut-away and disassembled. Note: Valve assemblies on fuel (A) and water (B) sides of check valves are identical. Note passage above valve plugs from fuel to water side; accumulated pressure due to air leakage vents through this passage to outlet (C) which leads to vent fitting. Connection (D) for air from reducing valve has restriction at (E) which checks any sudden flow of air which might rupture fuel flask. (F) is outlet for air to fuel flask; (G) is outlet for air to water compartment.

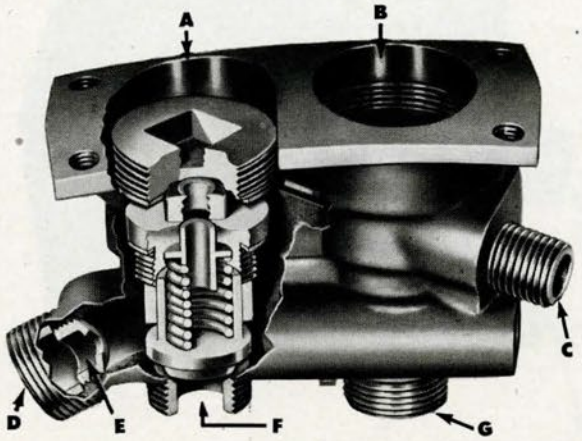

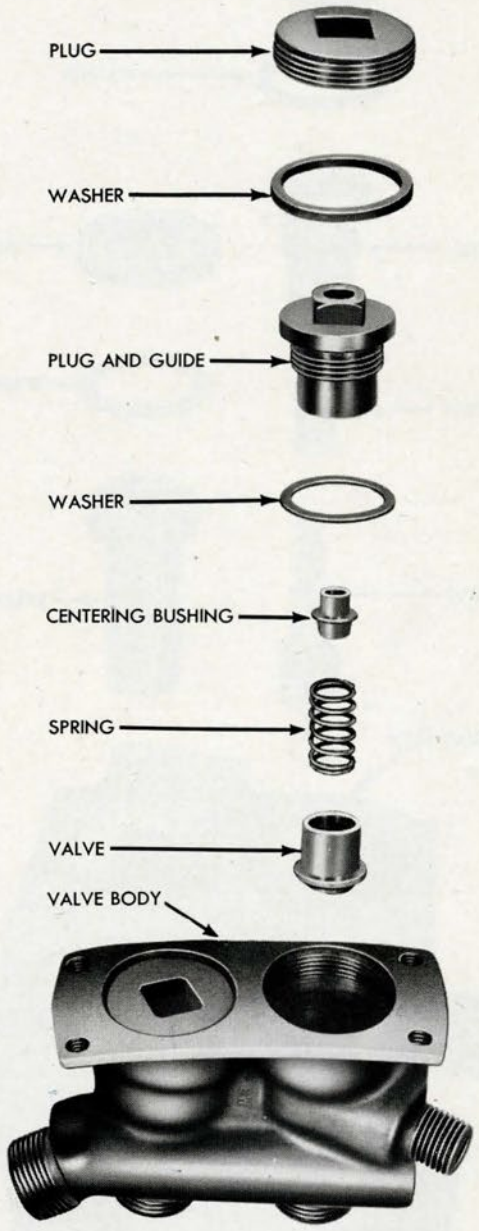

housed in one body casting. They are interposed between the fuel and water compartments and the restriction valve, the body being attached by screws to the midship section shell, as shown at "H", "I", "J", and "K" in Fig. 27. (Also see Fig. 26B.) They perform two important functions: first, the strainers pick up any foreign matter which might be in the fuel or water before they reach the combustion flask, thereby preventing the possibility of clogging the sprays. Second, the check valves automatically seal the fuel and water compartments against leakage of fuel and water through the restriction valve to the sprays and into the combustion flask until they are opened by reduced air pressure upon launching of the torpedo. The valves are of the poppet type and are double acting, preventing leakage outboard when open, as well as to the sprays when closed.

The fuel and water inlet nipples are arranged so that the liquid enters through the

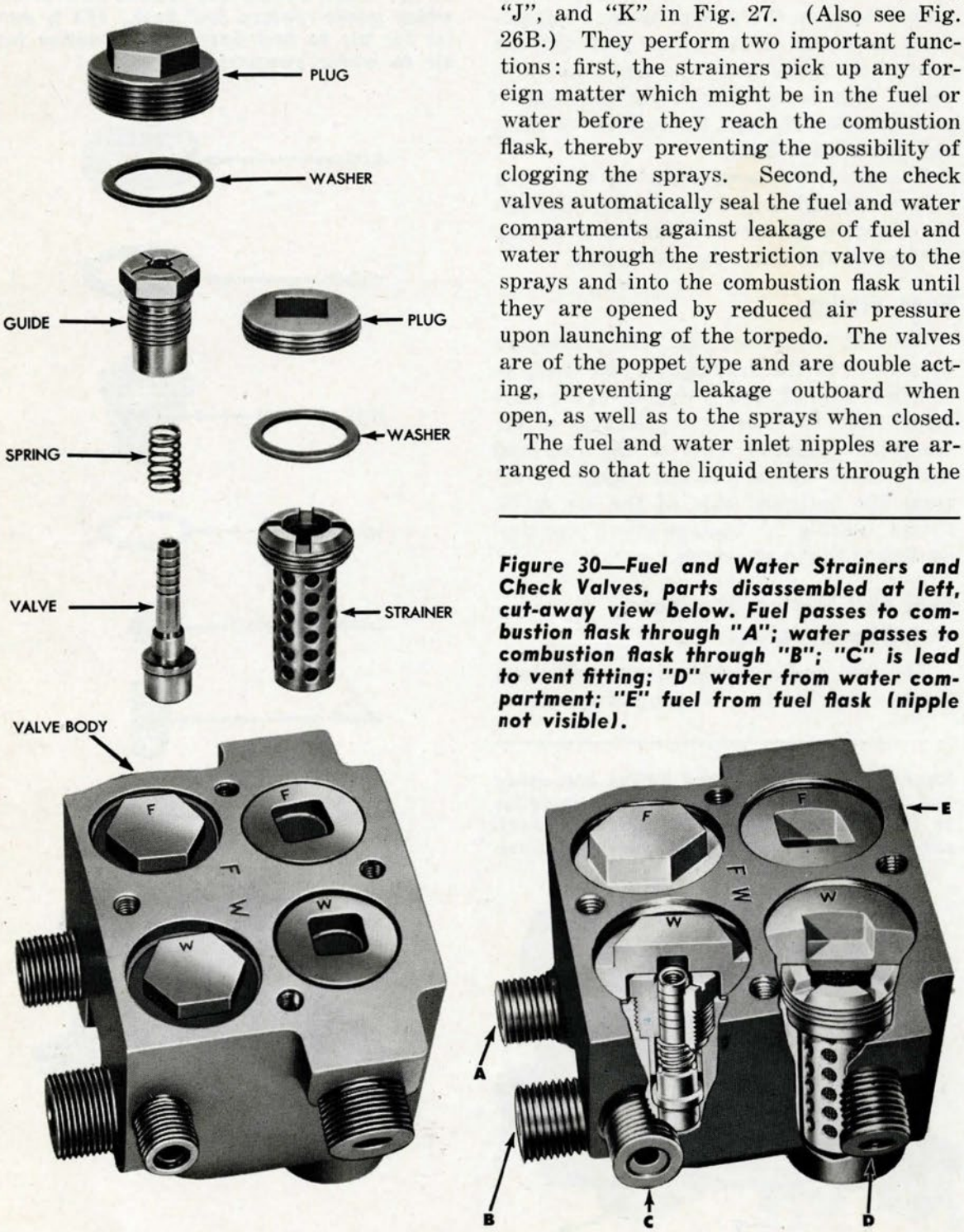

Figure 30—Fuel and Water Strainers and Check Valves, parts disassembled at left, cut-away view below. Fuel passes to combustion flask through "A"; water passes to combustion flask through "B"; "C" is lead to vent fitting; "D" water from water compartment; "E" fuel from fuel flask (nipple not visible).

top of the strainers and, passing through, emerges at the bottom under the check valves, thence through these valves to their outlet nipples directly above the valve seats.

Springs (Fig. 30) normally keep the check valves on their seats, 15 to 20 p.s.i. pressure being required to unseat either valve. The spaces above the valve guides are closed by screw plugs seated against

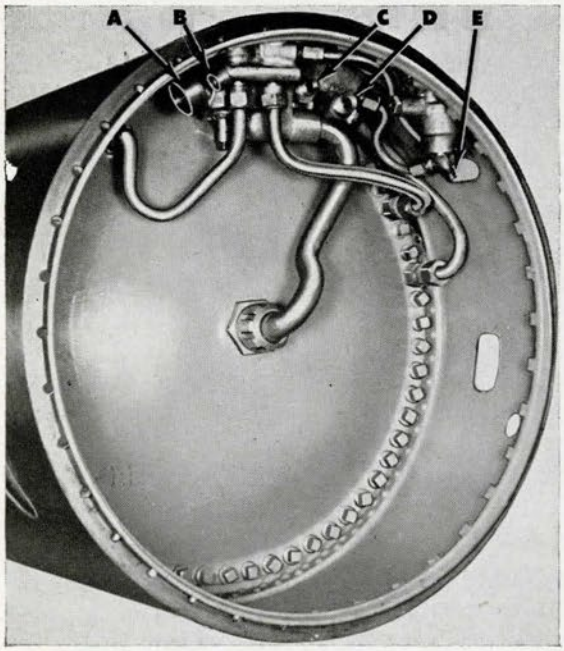

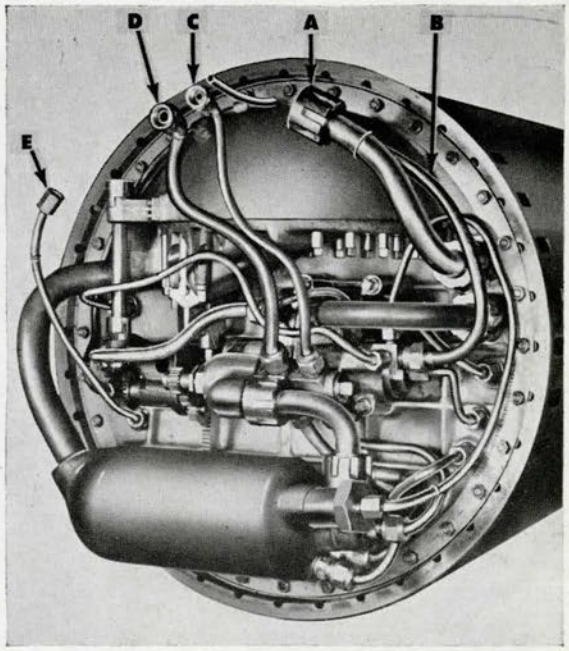

Figure 31—Connections from the air flask section to the afterbody—(A) Connection from stop and charging valve to preheater; (B) From reducing valve to air check valves; (C) from water compartment to water spray in combustion flask; (D) from fuel flask to fuel spray in combustion flask; (E) from vent fitting to afterbody

washers, and are interconnected by air-venting passages to the vent pipe, thence to the vent fitting.

From the check valves, the fuel and water pass through pipes to the restriction valve and thence to the sprays in the combustion flask.

Connections from Air Flask to Afterbody

The connections from the air flask to afterbody are shown in Fig. 31. The following chapter will describe these connections in their relation to the operating mechanisms of the torpedo.

Preheater

The preheater, which is a coil of copper tubing in the path of the exhaust gases above the turbines, serves to preheat the high-pressure air passing from the stop and charging valve to the starting and reducing valve. Located, as it is, in the exhaust chamber, the preheater transfers heat from the exhaust gases to the high-pressure air passing through the preheater.

This preheating, while conserving some of the heat otherwise lost in the exhaust gases, has its major value in promoting improved reducing-valve action, since the reducing valve will operate better with warm air.

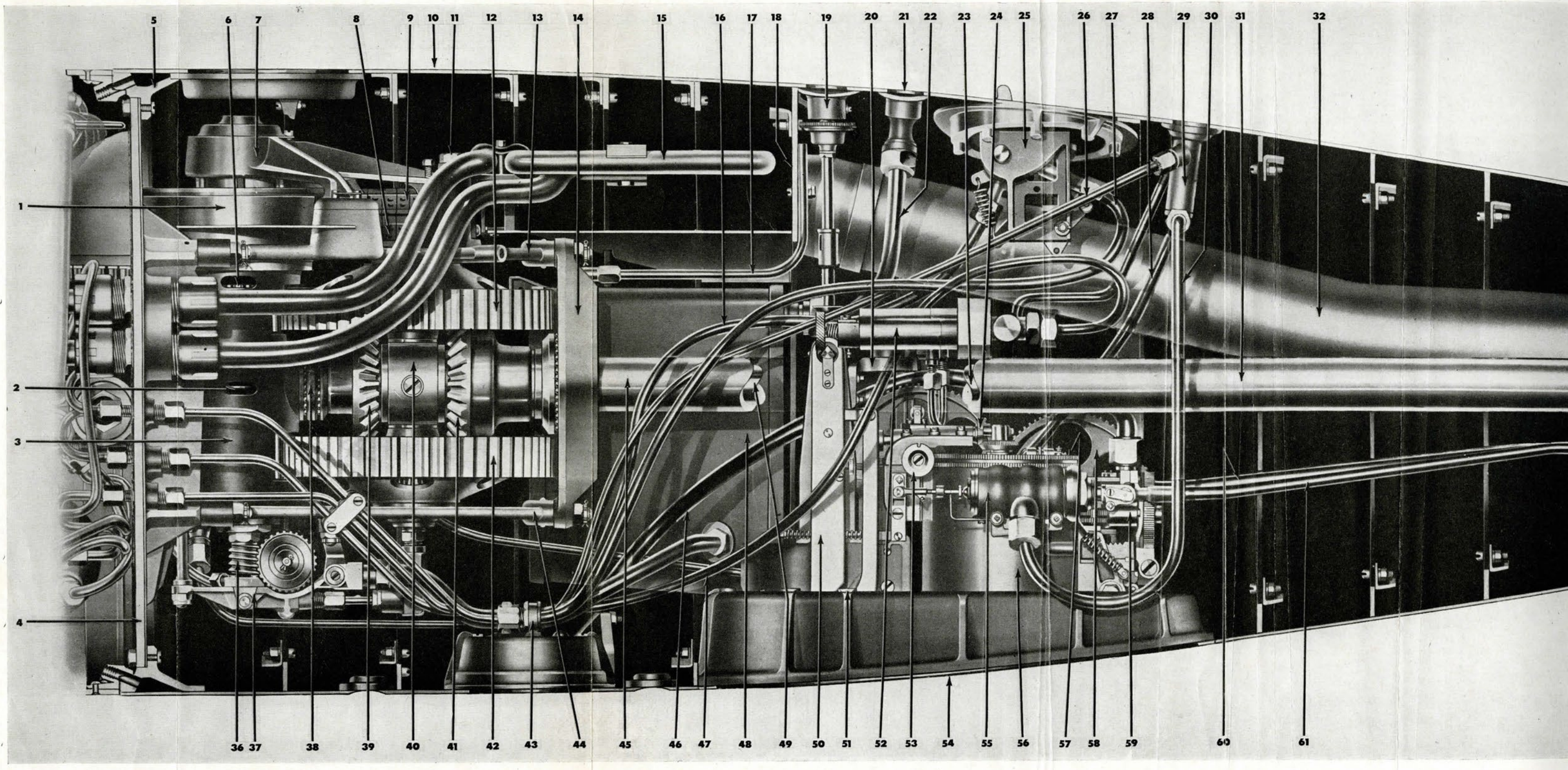

Figure 32—Afterbody, cut-away view

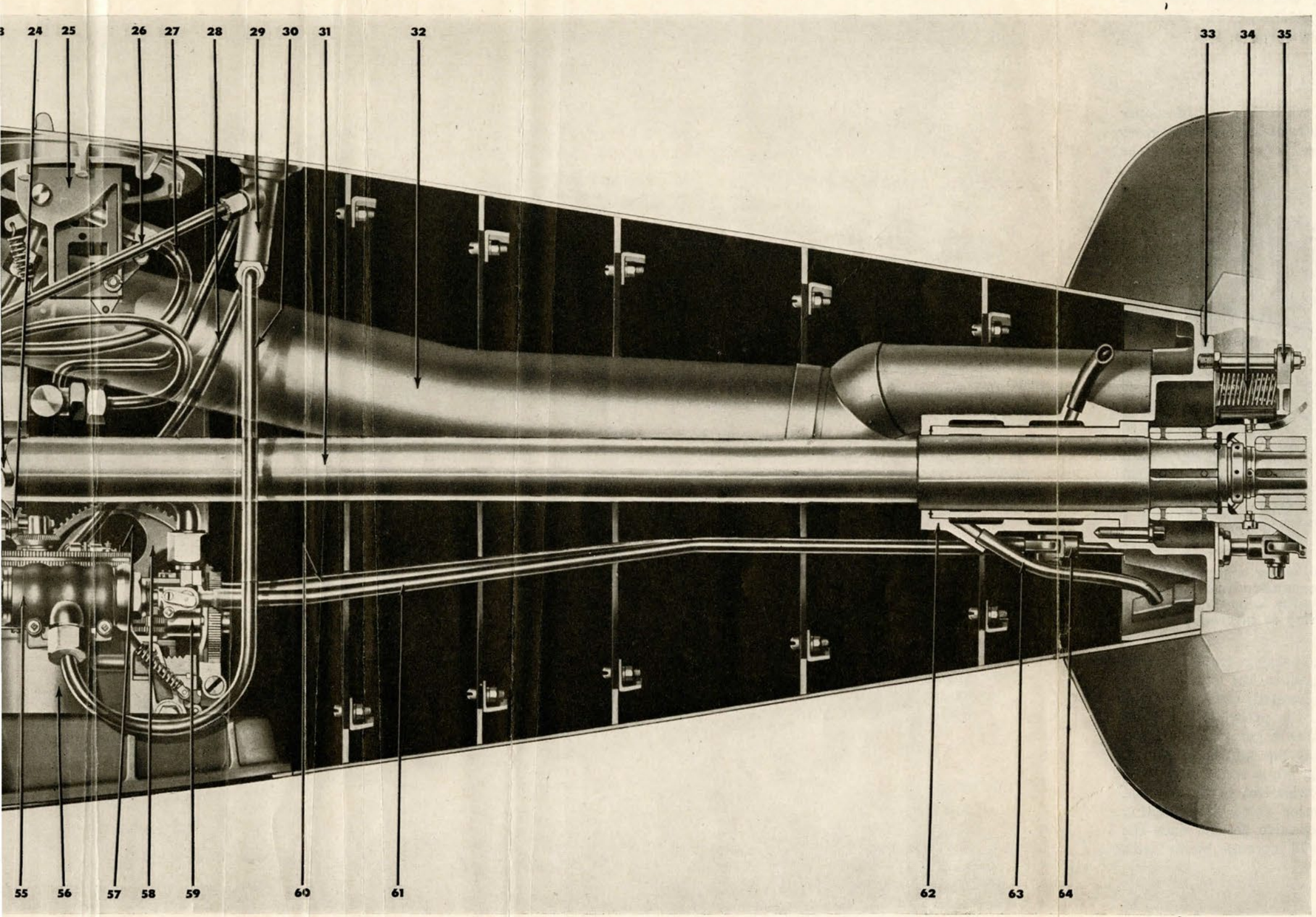

re 32—*Afterbody, cut-away view*

THE AFTERBODY

1. Turbine casing (splash pan)
2. Middle bearing
3. Turbine spindle casing
4. Turbine bulkhead
5. Engine cage
6. Driving pinion
7. Top bearing holder
8. First turbine wheel
9. Second turbine wheel
10. Afterbody shell
11. Oil Bolt
12. Main driving gear
13. Upper "A" frame
14. Engine-frame strut
15. Preheater
16. Air return, starting gear to reducing valve
17. Oil tank vent pipe
18. Vertical bulkhead
19. Depth-index assembly
20. Gyro reducing valve
21. Oil-tank filling flange
22. Oil filling pipe
23. After propeller shaft
24. Pallet-mechanism driving shaft
25. Starting gear
26. Air from combustion flask to air strainer body
27. High-pressure air from starting valve to starting gear
28. Air from air-strainer body to steering engine
29. Air-strainer body
30. Air from air-strainer body to depth engine
31. Forward propeller shaft
32. Exhaust tubes
33. After bulkhead
34. Exhaust valves
35. Exhaust-valve bracket
36. Oil-pump worm
37. Oil pump
38. Forward thrust bearing
39. Forward bevel gear
40. Crosshead
41. After bevel gear
42. Main driving gear
43. Pipe manifold
44. Lower "A" frame
45. Forward propeller shaft
46. High-pressure air from starting valve to gyro spin
47. Air from reducing valve to control valve
48. Oil tank
49. After propeller shaft
50. Pendulum, with related parts
51. Depth mechanism
52. Control valve
53. Gyro side-setting socket
54. Gyro door frame
55. Depth engine
56. Gyro pot
57. Steering engine (not visible)
58. Gyro side-setting gear
59. Gyro spinning and unlocking mechanism
60. Steering-rudder rod
61. Depth-rudder rod
62. After bearing for propeller shafts
63. Water from tail bearing
64. Depth-rudder connections

[redacted]

Chapter 4

THE AFTERBODY AND ITS MECHANISMS

The afterbody has been called the "torpedo's engine room and brain." In this section of the torpedo are mounted the propelling and controlling mechanisms, the mechanisms which start the torpedo, generate and apply the power necessary to drive it from the time it is launched until it reaches its target, also the mechanisms which determine the torpedo's vertical and horizontal courses and maintain it on those courses so that it will hold true to the mark.

In this chapter, the fittings of, and the mechanisms contained in, the afterbody are described, with the exception of the gyro and depth mechanisms, details of which are given in Chapter 6.

The large cut-away view, Fig. 32 (see foldout), shows these mechanisms in their positions in the afterbody. This illustration should be referred to for locating the individual mechanisms and fittings as they are described in the following pages.

General Construction

The afterbody shell is made of sheet steel, constructed as shown in Fig. 33. To the forward end of the afterbody shell is riveted and soldered the engine cage (see Fig. 33), this being a ring of forged steel which, in addition to reinforcing the end, forms a joint for attaching to the air flask section of the torpedo, and also provides a seat for the turbine bulkhead. The seat for the joint between the air-flask section and the afterbody is slightly tapered in form to facilitate assembly, and also to insure a tight fit and proper alignment. The afterbody is joined to the air flask section by steel joint screws; the turbine bulkhead is secured to the engine cage by studs and nuts, a gasket being interposed to give a water-tight joint.

The main engine is secured to the turbine bulkhead, and is removed from the afterbody with it as a unit. The engine mechanism is the major component of the propelling mechanism, and is the means by which the energy of the superheated gases delivered by the nozzles is converted into motive power for propelling the torpedo.

The after end of the afterbody shell is closed by the after bulkhead, which is a bronze casting held to the shell by screw rivets and by soldering. The after-bulkhead bearing, with gasket, U-Seal and retainer, is secured by screws to the after end of the after bulkhead. This bearing supports the after ends of the propeller shafts. The bulkhead bearing is water-cooled during the run, an annular cavity being provided. The cavity is connected by pipes to small scoops on the exterior of the shell, the top scoop pointing forward and the bottom scoop pointing aft. A forced circulation of water results from the motion of the torpedo. (Fig. 64A). Four spring-loaded exhaust valves are secured to the after end of the after bulkhead by means of a valve bracket and studs. These valves permit the escape of gases from the afterbody through the propeller sleeves during a run, and prevent entry of water into the afterbody at the end of the run. Two stuffing boxes in the after bulkhead provide watertight bearings for the depth and steering rudder connections.

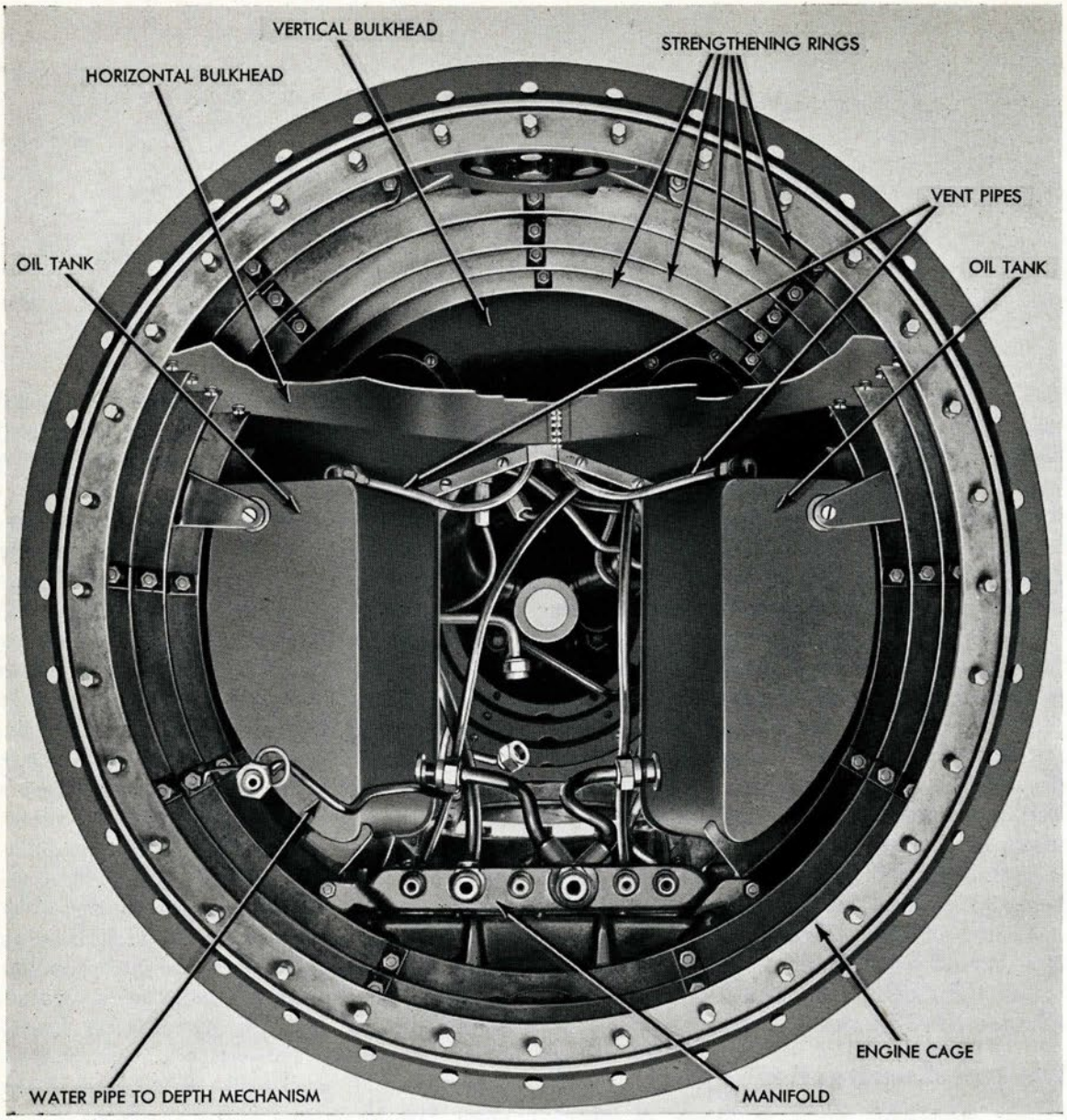

Figure 33—Interior of Afterbody Shell

Major Mechanisms of the Afterbody

The mechanisms contained in the afterbody, or attached to the turbine bulkhead, each of which will be described in detail in this chapter, include the following: The starting gear; the starting and reducing valve group (including the control valve); the super-heating system, which includes the combustion flask, the fuel and water sprays, and the igniter; the propelling mechanism, which includes the nozzles, the turbine bulkhead, the main engine, the oiling system, exhaust system, and the propeller shafts, sleeves, and hubs, and the propellers. The sleeves, hubs and propellers are described in Chapter 5. The afterbody also contains the depth mechanism and the gyro mechanism, which are described in Chapter 6.

Starting Gear

The starting gear (Figs. 34 and 35) is located to the right of the top center line of the afterbody, as shown in Fig. 32. The piston (Fig. 36A) of the starting valve provides the means by which high-pressure air holding the starting valve closed may be exhausted, thus permitting the starting valve to open and start the torpedo (see Fig. 36B). A hand-operated device (Fig. 37), operated from the top of the starting gear, is provided for seating the piston, thus stopping the torpedo during test runs or if accidentally started.

Figs. 36A and 36B are views of the starting-gear body cut away from the valve body to show the operation of the valve, also the air passages.

When the torpedo is launched, the starting lever is thrown to the rear by the torpedo-tube tripping latch. The starting lever is normally held in its forward position by the trip cam spring. In this position the piston lifter is at its lowest position, the starting piston is closed, and the escape of air from above the starting valve is prevented. When the starting lever is forced back by the tripping latch, the action of the trip cam raises the piston lifter. This lifts the starting piston off its seat, thereby allowing the air above the starting valve to escape, permitting the starting valve to open and start the torpedo. At the same time, the catch on the piston lever will move downward, allowing the unlocking lever to move forward, in which position it locks the piston lever, thus holding the starting piston off its seat.

A method is provided for stopping the torpedo after a test run, and for reseating the starting piston before charging the air flask. This consists of an unlocking cam, which is mounted on the index spindle in such a position that, when the index spindle is rotated, the unlocking cam will engage the unlocking lever and force it back. This allows the piston lever and catch to return to their closed positions, and allows the starting piston to seat under the action of air pressure aided by the spring, or of the spring alone, thus seating the starting valve (in the starting- and reducing-valve body) and shutting off the air supply. The upper end of the index spindle is provided with a flange and has a small head squared to receive a setting tool by means of which it may be rotated. The body is stamped with an arrow showing the direction of rotation.

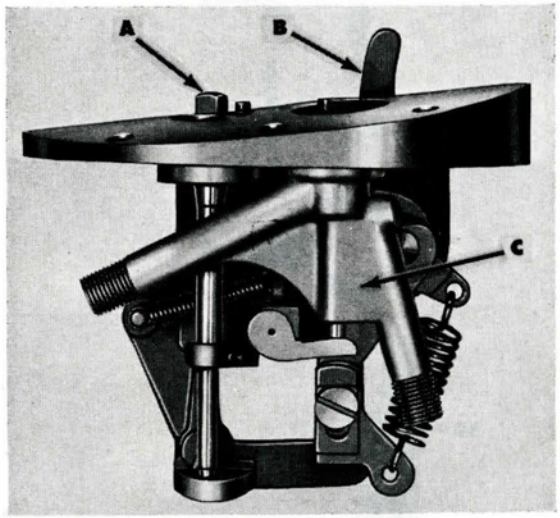

Figure 34—The Starting Gear, assembled—(A) Index spindle; (B) Starting lever; (C) Starting piston body

Governor

The function of the governor is to stop a torpedo when it develops excessive speed, and thereby safeguard personnel and prevent serious damage to the torpedo. This is accomplished by centrifugal force actuating the governor, which in turn closes a valve (governor valve) in the air line from the starting piston to the reduced side of the reducing valve, thus banking the air over the main starting valve. By seating, this valve stops the torpedo.

The governor is mounted in a bracket, which is secured to the lower turbine "A" frame, adjacent to the oil pump, and is driven by a pinion on the oil-pump shaft in mesh with a gear on the governor. (See Fig. 38.)

The governor operates as follows: If the speed of the turbines remains within fixed limits, the weights are held in place by the springs (see Fig. 39), but beyond a certain

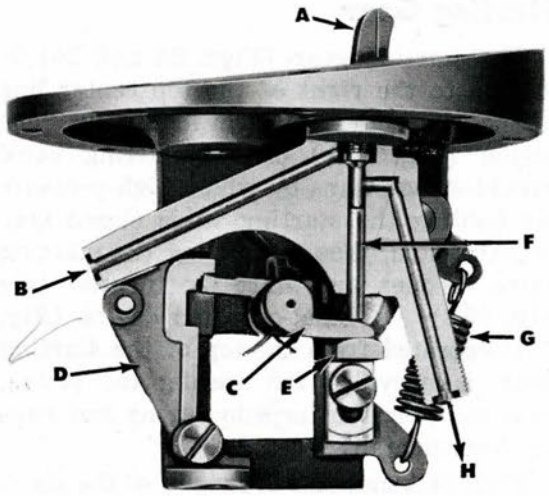

Figure 36A—The Starting Gear, cut-away view (piston closed)—(A) Starting lever; (B) Inlet (from above starting valve); (C) Piston lifter; (D) Unlocking lever; (E) Piston lift; (F) Starting piston, closed; (G) Trip cam spring; (H) Outlet, return to reducing valve via governor

Figure 35—The Starting Gear, disassembled —(1) Index spindle; (2) Screws; (3) Packing ring; (4) Cup washer; (5) Plug; (6) Washer; (7) Spring; (8) Starting piston; (9) Lock nut; (10) Starting lever; (11) Set screw; (12) Unlocking cam; (13) Cotter pin; (14) Nut; (15) Washer; (16) Cotter pin; (17) Taper pin; (18) Trip cam spring; (19) Washer; (20) Starting piston body; (21) Packing; (22) Packing gland; (23) Trip cam; (24) Unlocking lever; (25) Tension spring; (26) Cotter pin; (27) Catch; (28) Piston lift; (29) Keep screw; (30) Screw; (31) Piston lifter

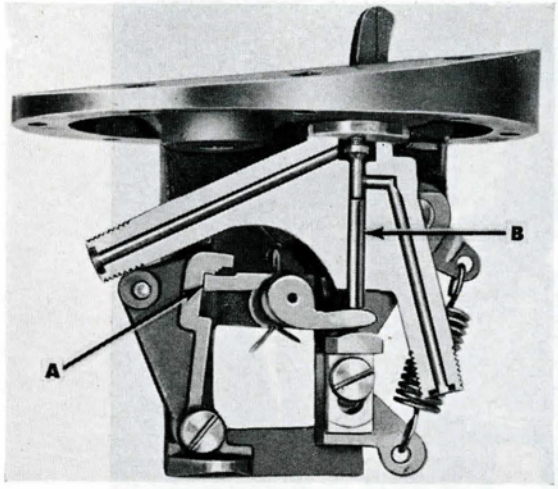

Figure 36B—The Starting Gear, cut-away view (piston open)—(A) Unlocking lever (holding piston open); (B) Starting piston (open position)

speed, the pull of centrifugal force in the weights overcomes the spring pressure and the weights fly outward. One of the weights, striking the governor trip (see Fig. 39), will release the governor lever, allowing the governor valve to seat, stopping the torpedo.

While only one plunger strikes the governor trip, two are provided directly opposite each other, the centrifugal forces of both being balanced through their racks and pinion, thus preventing excessive vibration.

The governor trip pivots on a stud in the governor-valve body. Its inboard end is notched, and holds the governor lever in place. The other end curves downward, and is in position to be struck by a governor weight. When struck, it rotates slightly, allowing the governor lever to swing inboard, which in turn allows the valve to seat. The trip is held in position by a spring-loaded button inserted in the lower turbine "A" frame (see Fig. 39).

The governor lever is pivoted in the governor-valve body; it spans the stem of the governor valve, holding it off its seat, and is held by a notch on the governor trip. It tends to swing inboard, by the action of a flat spring screwed to it and bent around its pivot, when released by the governor trip.

Starting and Reducing Valve Group

The starting valve, the reducing valve, and the restriction valve are contained in a single body. The body is attached to the turbine bulkhead, as shown in Figs. 40A and 40B, where it forms part of the reducing and superheating system. The complete valve body is shown in Fig. 41A, the parts disassembled in Fig. 41B. Fig. 42 is a diagrammatic drawing showing the operation of the valves.

The starting valve of the torpedo executes a function similar to that of a throttle valve on a steam engine. It opens automatically when the starting gear is tripped. Its essential function is to isolate the stored energy (compressed air) of the torpedo until the proper time for its release, and

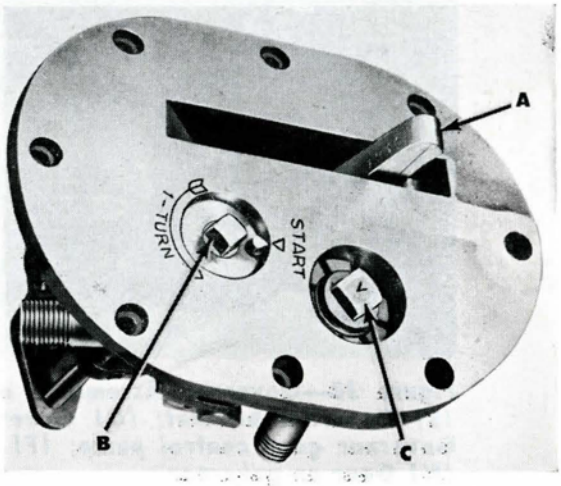

Figure 37—The Starting Gear, top view—(A) Starting lever (starts torpedo automatically when thrown aft); (B) Index spindle (stops torpedo by hand); (C) Plug for starting piston body

then to open automatically when the starting piston is lifted.

Referring to Fig. 42, the operation of starting and reducing valves is as follows: Opening the stop valve, as described in the preceding chapter, allows high-pressure air to pass through (1) to the starting valve,



Figure 38—Governor Assembled on Main Engine—(A) Air to reducer; (B) Governor bracket; (C) Governor; (D) Air from starting gear; (E) Governor gear control pump; (F) Oil pump; (G) Oil to spindle casing; (H) Gear on governor

which is held against its seat by a spring and the air pressure above the valve. A small hole or by-pass is drilled through the valve, which allows high-pressure air to enter the space above the valve and bank up in the pipe connected to nipple (2) to the starting gear, where it holds the starting piston on its seat.

When the starting gear is tripped as the torpedo is launched, the high-pressure air is exhausted through (2) from above the starting valve, allowing the valve to lift against the pressure of the starting-valve spring, thereby allowing the high-pressure air to pass into (3). The air, after passing through the starting gear, returns to the low-pressure side of the reducing valve through (10).

From (3), the high-pressure air leads in three directions: (a) through (4) to the gyro spinning mechanism to give the gyro its initial spin; (b) through the reducing

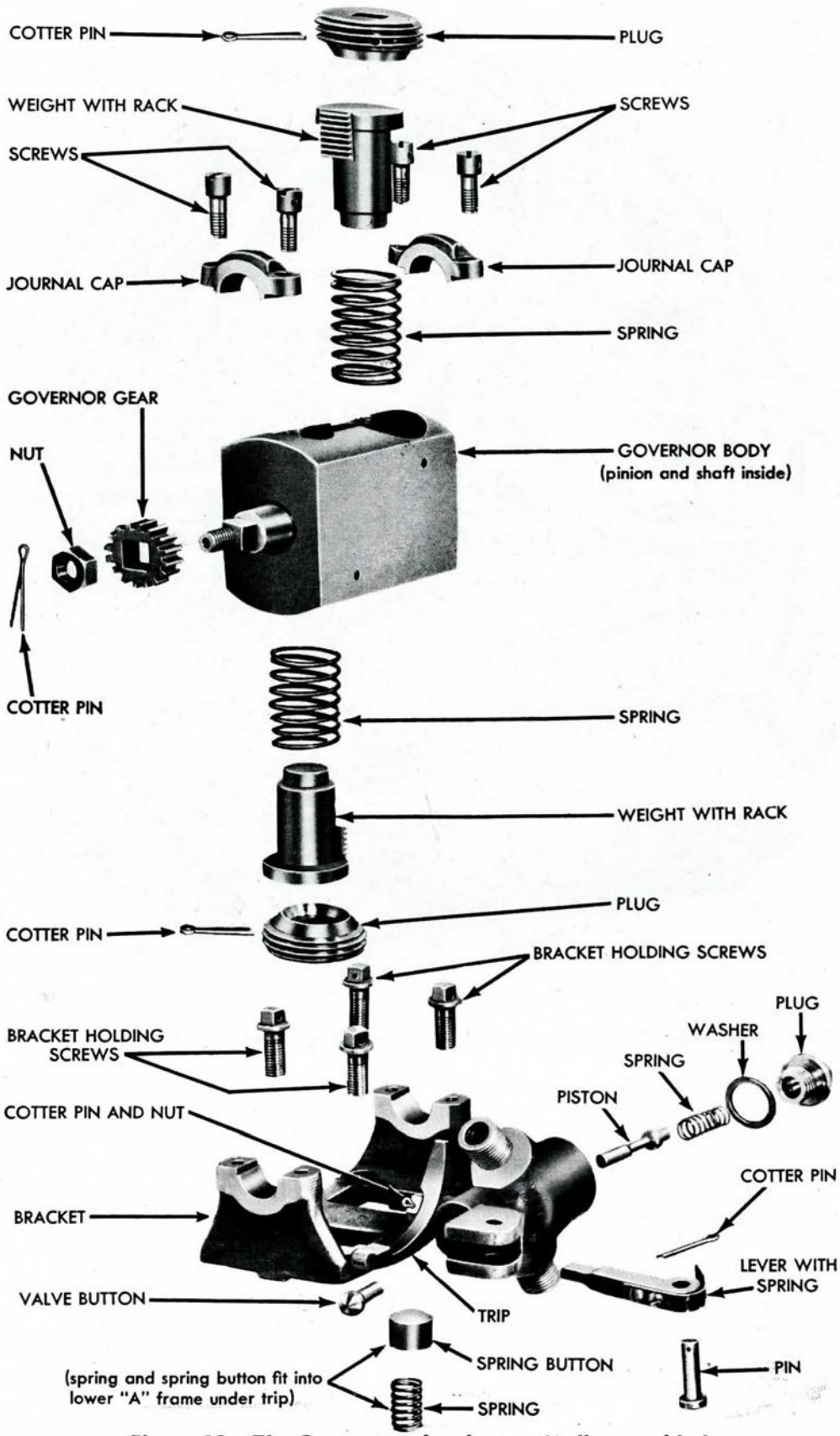

Figure 39—The Governor, showing parts disassembled

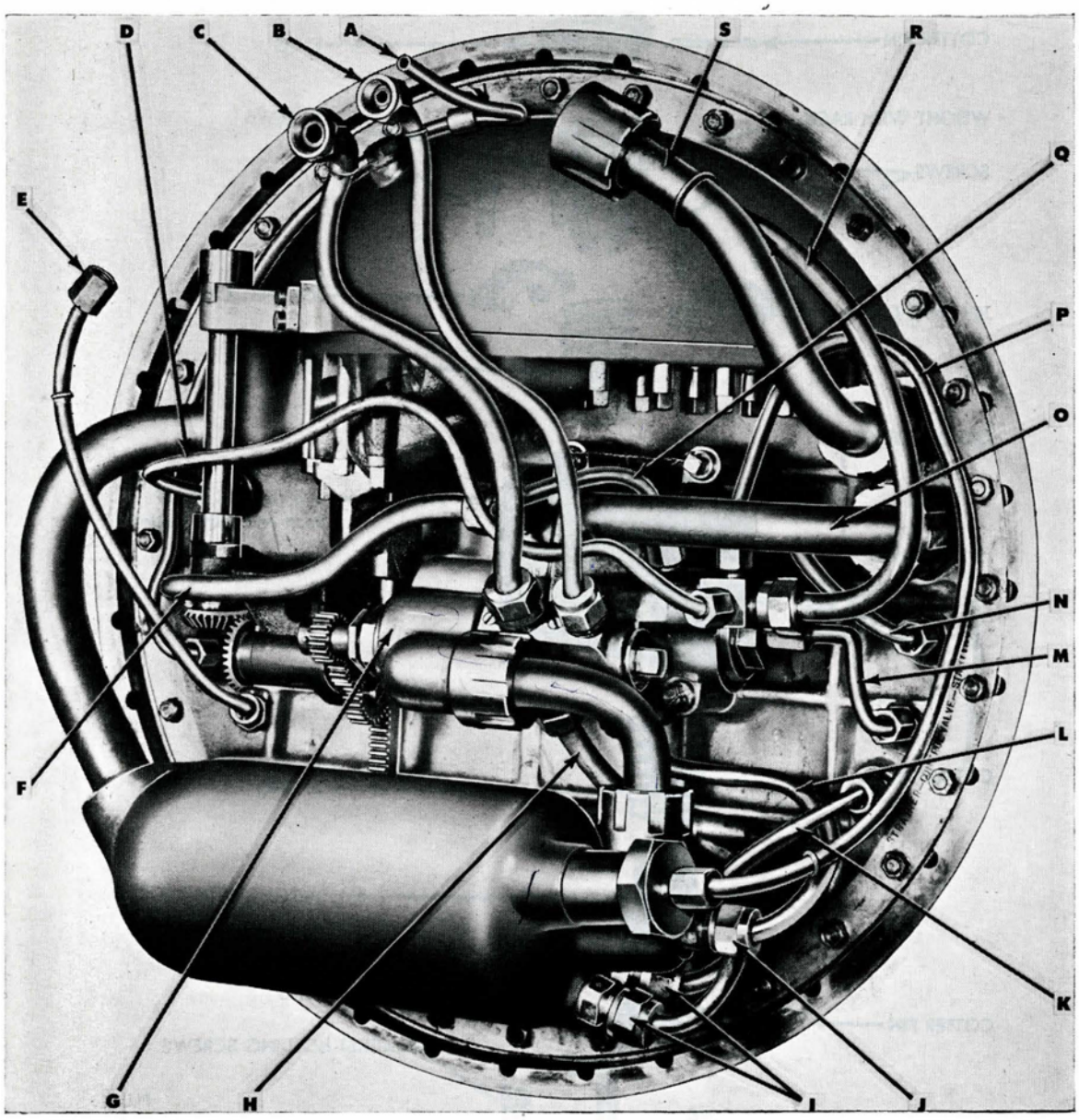

Figure 40A—The Turbine Bulkhead, with attached parts and pipe connections

A—Water pipe to depth mechanism casing
B—Fuel pipe (fuel check to restriction valve)
C—Water pipe (water check to restriction valve)
D—Air pipe (starting gear return)
E—Vent pipe
F—Air pipe (starting valve to gyro spin)
G—Starting and reducing valve group
H—Water pipe (restriction valve to water sprays)
I—Water sprays
J—Fuel spray
K—Air pipe (combustion flask to air-strainer body)
L—Fuel pipe (restriction valve to fuel spray)
M—Air pipe (reducer to control valve)
N—Air pipe (starting valve to starting gear)
O—Main air pipe (preheater to starting valve)
P—Air pipe (reducer to igniter)
Q—Control pipe on reducer
R—Air pipe (reducer to air check valves)
S—Main air pipe (stop- and charging-valve body to preheater)

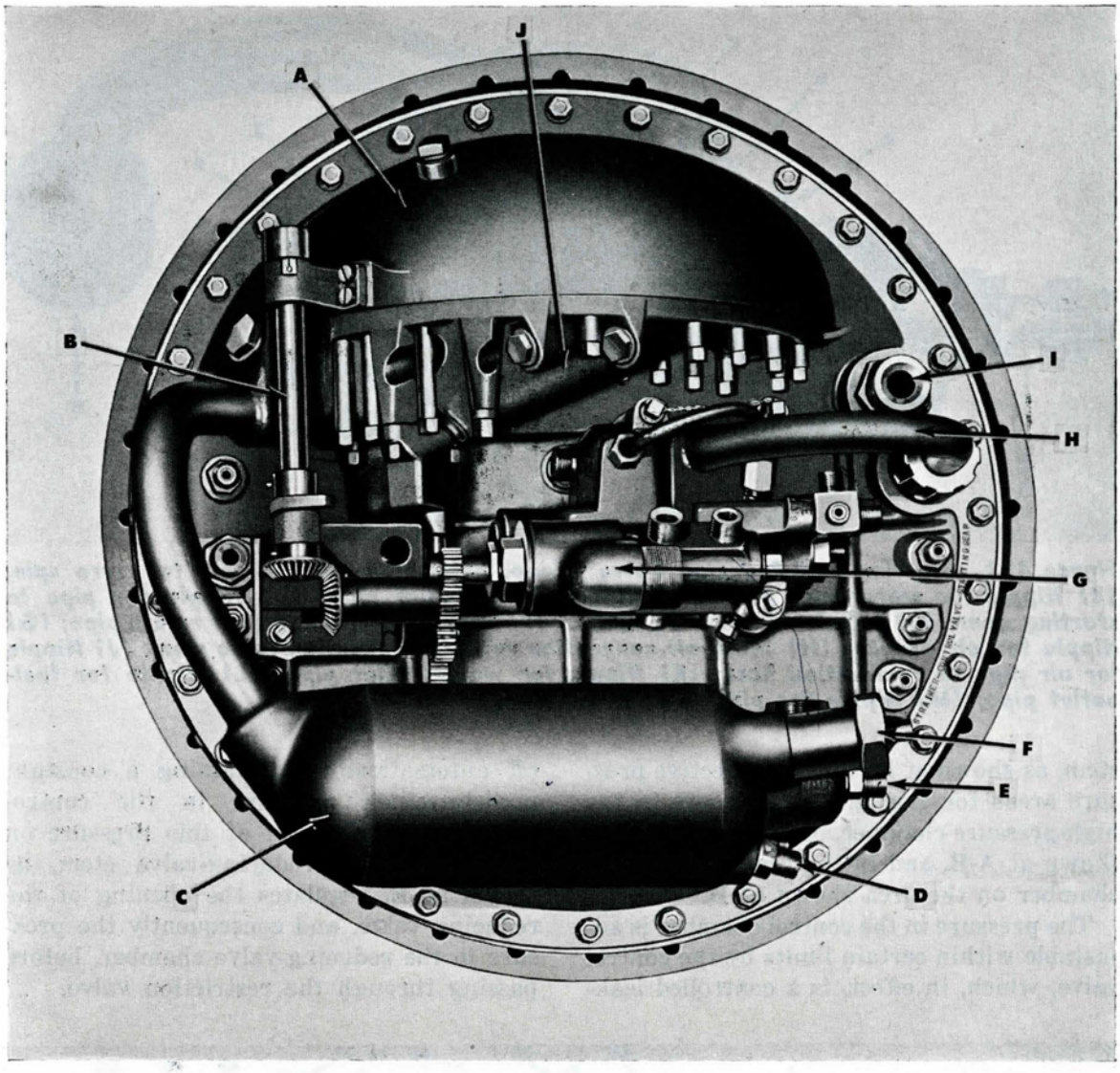

Figure 40B—The Turbine Bulkhead, with attached parts

A—Turbine pocket
B—Speed change mechanism
C—Combustion flask
D—Water spray
E—Fuel spray
F—Igniter
G—Starting and reducing valve group
H—Air from preheater coil
I—Air to preheater coil
J—Nozzle unit

valve to the restriction (5) in the restriction valve and thence to the combustion flask; and (c) from the starting valve chamber (3) through pipe (6) to the control chamber (7).

All pressures acting upward, as indicated by arrows in areas **A-B** and **D** on Fig. 42, tend to force the reducing valve upward against its seat, thus decreasing the flow of air passing through. All pressures acting downward, as indicated by arrows in areas **E** and **C-B**, tend to open the valve, thus increasing the flow of air passing through. It is therefore evident that the effective pressure area for opening the valve is in the control chamber on the upper end of the

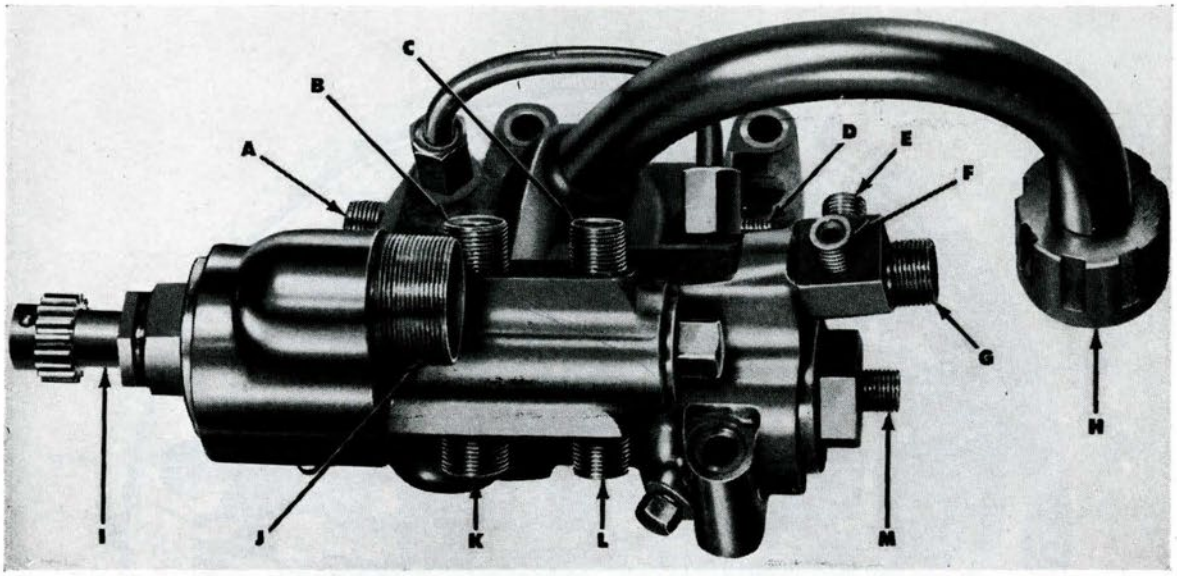

Figure 41A—Starting and Reducing Valve Group, assembled—(A) Nipple for gyro spin; (B) Nipple for water-inlet pipe; (C) Nipple for fuel-inlet pipe; (D) Nipple for pipe to starting gear; (E) Nipple for pipe to igniter; (F) Nipple for starting-gear return pipe; (G) Nipple for air checks; (H) Main air-connection nut; (I) Restriction valve stem; (J) Nipple for air pipe to combustion flask; (K) Nipple for water-outlet pipe; (L) Nipple for fuel-outlet pipe; (M) Nipple for pipe to control valve.

stem, as shown at **E**; and the effective pressure areas for closing the valve are in the high-pressure chamber, on the stem area, as shown at **A-B**, and in the reduced pressure chamber on the area shown at **D**.

The pressure in the control chamber is adjustable within certain limits by the control valve, which, in effect, is a controlled leak-off automatically maintaining a constant predetermined pressure in the control chamber. The action of this pressure on the end of the reducing-valve stem, as shown at **E**, regulates the opening of the reducing valve, and consequently the pressure in the reducing-valve chamber, before passing through the restriction valve.

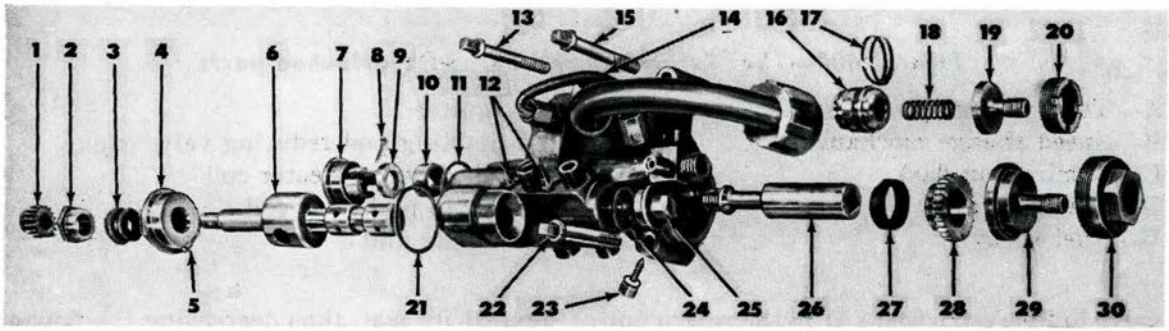

Figure 41B—Starting and Reducing Valve Group, disassembled—(1) Pinion; (2) Gland; (3) Packing; (4) Stuffing box; (5) Taper pin for pinion; (6) Restriction valve; (7) Stop plug; (8) Cotter pin; (9) Lock nut; (10) Reducing valve; (11) Stop-plug washer; (12) Oil plugs; (13) Holding screw; (14) Control pipe; (15) Holding screw; (16) Starting valve; (17) Piston rings; (18) Spring; (19) Nipple connection; (20) Follower; (21) Washer for stuffing box; (22) Holding screw; (23) Packing gland lock screw and washer; (24) Washer; (25) Plug; (26) Valve stem; (27) Packing; (28) Packing gland; (29) Nipple connection; (30) Follower nut

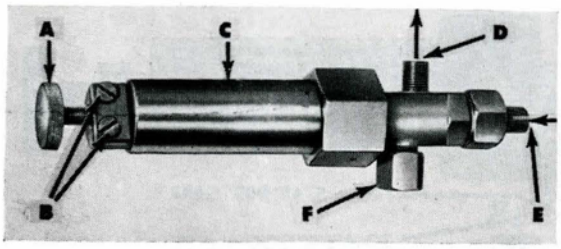

Figure 41C—The Control Valve, assembled (connects to reducing valve)—(A) Adjusting screw; (B) Clamp lock screws; (C) Spring case; (D) Leak-off air to strainer body; (E) Air from control chamber; (F) Blank nut, for testing only

reducer delivery pressure; and a decrease in control-valve pressure setting causes a decrease in reducer delivery pressure.

Reduced air also passes through (11) (Fig. 42) to the igniter in the combustion flask, and through (12) to the air checks.

Control Valve

As previously stated, the control valve (shown in Figs. 41C, 41D, and 42) is, in effect, a spring-regulated leak-off for the high-pressure air passing through the re-

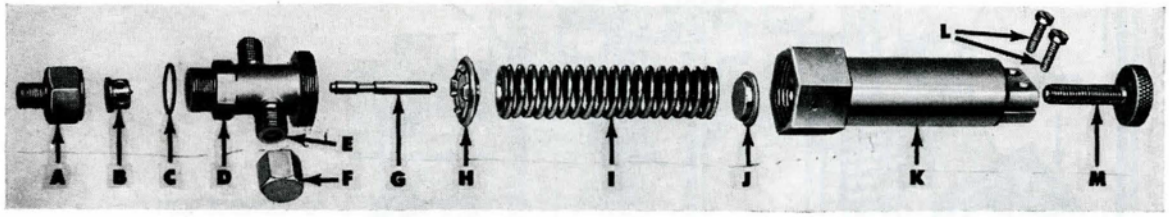

Figure 41D—The Control Valve, disassembled—(A) Cap; (B) Strainer; (C) Washer; (D) Body; (E) Test nipple; (F) Blank nut (washer inside); (G) Control valve; (H) Large spring button; (I) Spring; (J) Small spring button; (K) Spring case; (L) Clamp lock screws; (M) Adjusting screw

Considering the effect of the pressures in the control chamber, as indicated at **E**, and in the high-pressure chamber as indicated at **A-B**, augmented by pressure in the reduced-pressure chamber, as indicated at **D**, it will be seen that the pressure acting at **E** will open the reducing valve to a point where the effect of the pressures at **A-B** and **D** is sufficient to overcome the effect of the pressure at **E**. Thus, in order to balance the pressures against area **E** and areas **A-B** and **D**, the reducing valve stem is always seeking to locate itself in a position which will maintain the reduced pressure for which adjusted. Any increase or decrease from the designated pressure in the reduced-pressure chamber will result in the closing or opening, respectively, of the valve, thereby causing a decrease or increase in pressure until the proper value is reached.

The delivery pressure of the reducing valve is the direct function of the pressure which the control valve is set to maintain in the control chamber. An increase in control-valve pressure setting causes increased

striction (9) into the control chamber (7) of the reducing valve. The operation is as follows: Opening of the starting valve passes high-pressure air through the restriction (9) to the control chamber (7), gradually building up the pressure in this chamber and unseating the reducing valve. The control chamber and control valve being directly connected, the same pressure is built up in each at the same time.

As the pressure builds up in front of the control valve, it gradually compresses the control-valve spring until, at the determined pressure, the spring is compressed enough to cause the control valve to uncover the groove in the control-valve body, allowing the air to bleed out and pass through the leak-off connection to the air strainer in the afterbody. Thus the control valve, balanced by the spring on one end and the pressure from the control chamber on the other, maintains the pressure constant within very close limits.

In order to control the rate of flow of reduced air, fuel, and water to the combustion

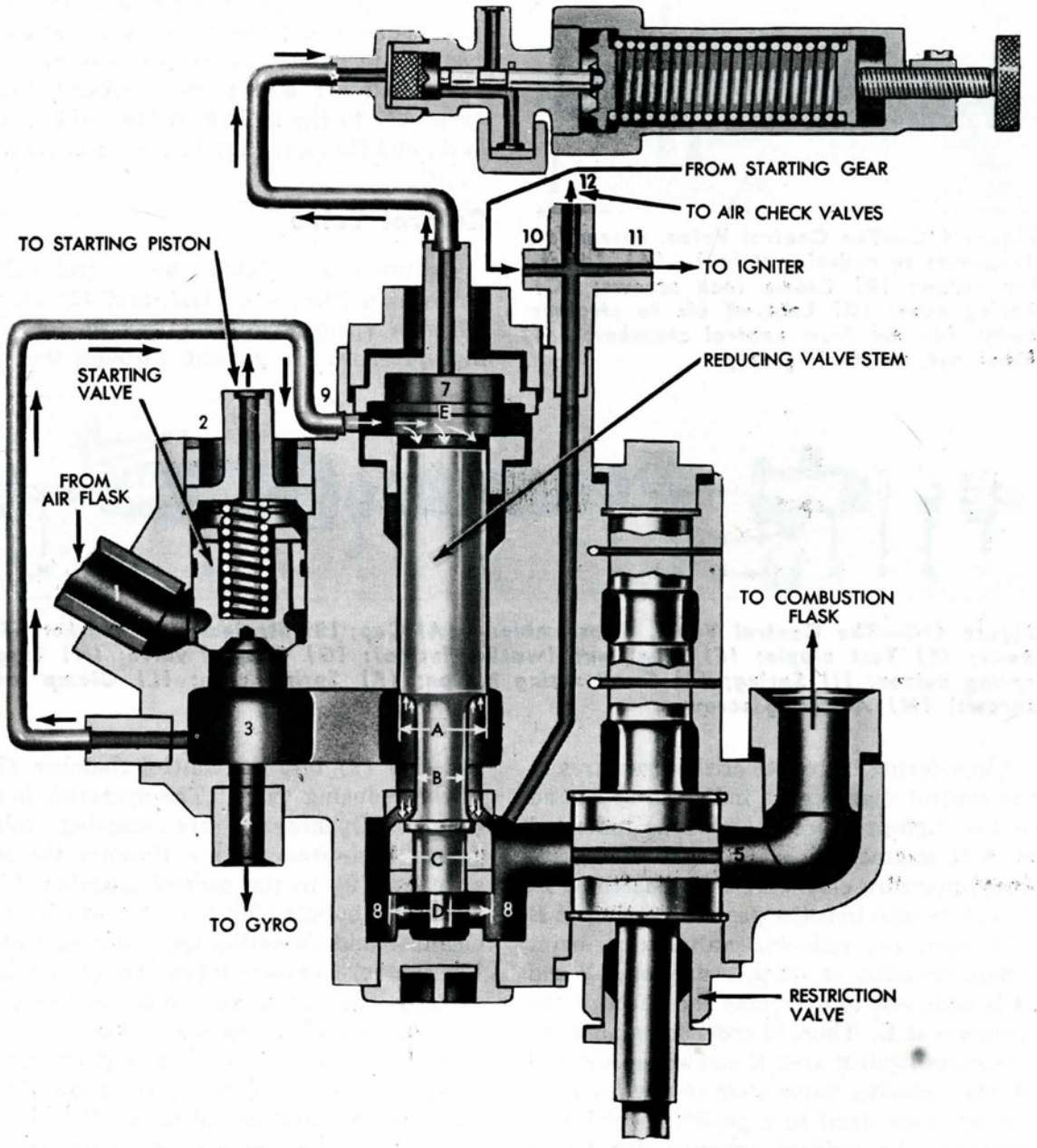

Figure 42—Starting and Reducing Valve Group (including Control Valve), diagrammatic view

flask, and thereby regulate the volume of combustion to the requirements of two or five nozzle jets, two sets of restrictions, one set for high speed and one set for low speed, of the required sizes are placed between (a) the reducing valve and the superheater for air, (b) between the fuel check valve and the spray for fuel, and (c) between the water check valve and the sprays for water. These restrictions are arranged in a rotary valve (see Fig. 42) in such a manner that by rotating the valve 120 degrees a change in restrictions will be affected. The method of operating this valve to change the restrictions will be described under "Speed Change Mechanism".

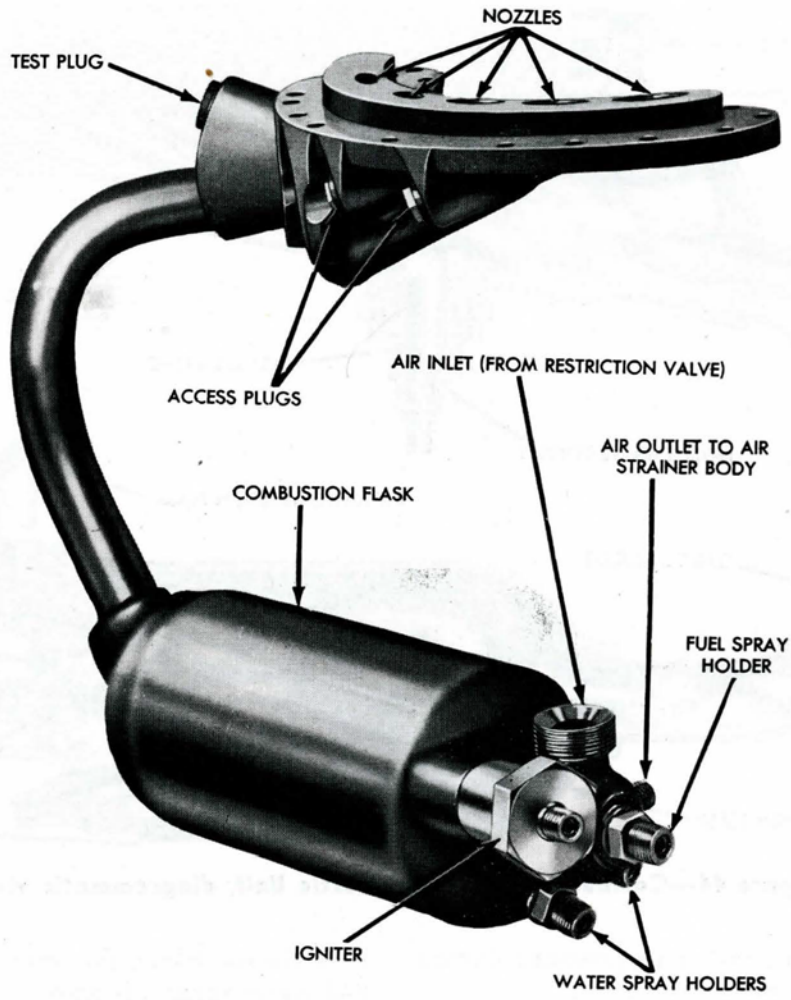

Figure 43—Combustion Flask and Nozzle Unit

Superheating System

The superheating system of the torpedo includes all those parts connected with creating and conveying the energy required to propel the torpedo. These are the combustion flask, the fuel and water sprays, and the igniter.

If used simply as stored, the compressed air in the air flask of the torpedo contains only a definite and limited amount of energy which, with the most economical conversion into motive power, will propel a torpedo for a limited maximum distance at a certain speed. This energy, however, is materially increased during its conversion into motive power by a simple application of the law of expansion of gases on increase of temperature; and such an increase of temperature is accomplished in the present torpedo design by the superheating system.

In order to grasp clearly the functions of the superheating system, two features incident to torpedo design should be considered: First, that increase of range involves decrease of speed, and therefore decrease of engine working pressure, and vice versa; second, that for any given speed, with the accompanying maximum range at such speed, there is a definite economical engine working pressure.

It is, therefore, apparent that the maintenance of constant and economical working pressure during a run is mandatory to torpedo efficiency. With the reducing and superheating system such as is now being

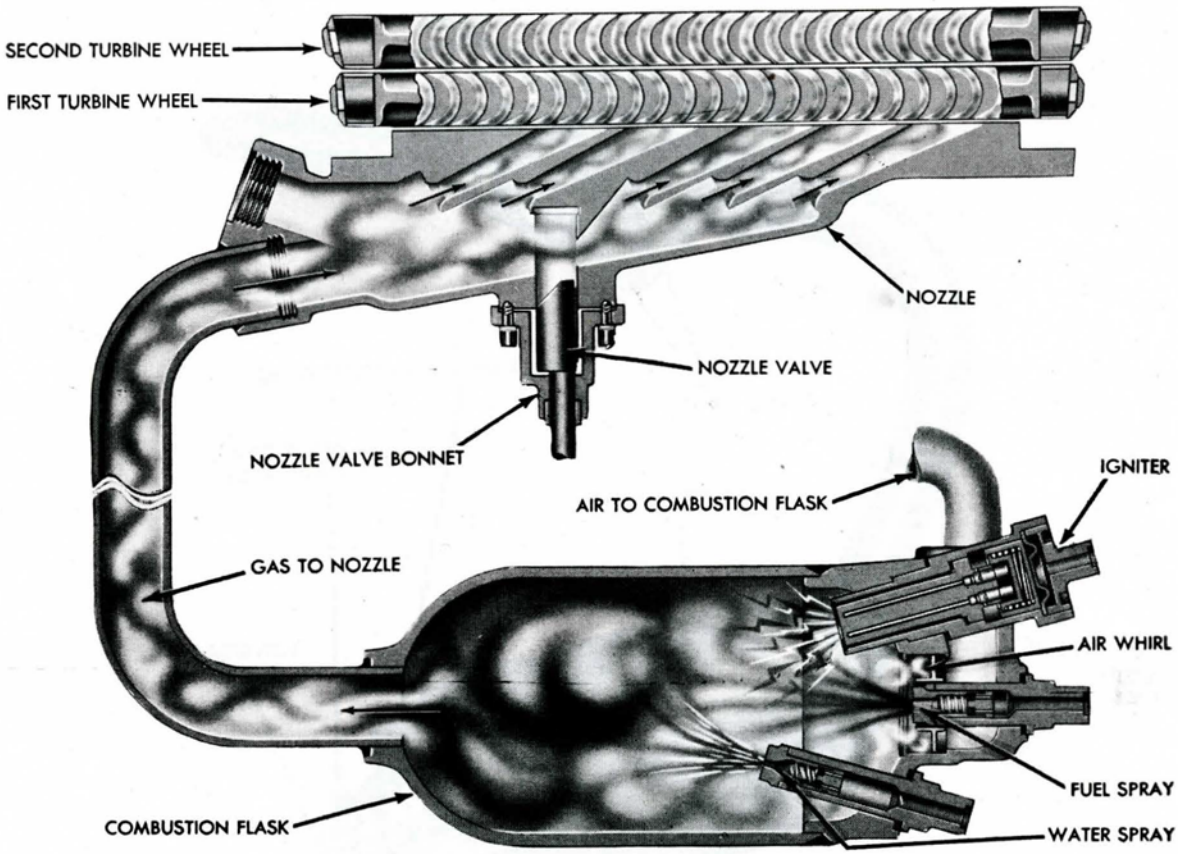

Figure 44—Combustion Flask and Nozzle Unit, diagrammatic view

installed, the variation in pressure during a run is negligible.

Combustion Flask

The function of the combustion flask is to generate gases and steam of proper volume and temperature to drive the main engine, and hence the torpedo, at a specified speed.

Located on the forward side of the turbine bulkhead, as shown in Fig. 40B, is a pressure-tight chamber, the combustion flask, wherein fuel (alcohol) and water are vaporized, mixed with air, and ignited. Once fired by the igniter, the mixture reaches a temperature of approximately 1500 degrees Fahrenheit almost instantaneously, delivering a gas and steam mixture at a working pressure of approximately 450 p.s.i. at high power and 480 p.s.i. at low power to the nozzles.

The combustion flask and nozzle unit, with the air whirl, the igniter, and the fuel and water sprays, is shown in Fig. 43. Fig. 44 is a diagrammatic drawing showing the generation of gases in the combustion flask and their passage through the nozzles and turbines. In Figs. 45A and 45B, the fuel spray and water spray are shown disassembled. These views should be referred to in connection with the following description of the combustion flask.

After passing through the reducing valve and the restriction, as previously described, the air passes through an air whirl and into the combustion flask (see Fig. 44). The air whirl serves to give the air from the restriction valve a whirling motion as it passes through. A hole is drilled and tapped in the center of the cover over the air whirl, this hole being for the fuel-spray holder, the lower end of which is located in the center of the air whirl, being thus positioned for the efficient vaporization of the fuel for

combustion. The water sprays, fuel spray, and igniter are located as shown in Fig. 43.

In order for fuel and water to enter the combustion flask, the pressure of air from the reducer which enters the combustion flask must be less than the pressure of air from the restriction valve which forces the fuel and water into the combustion flask.

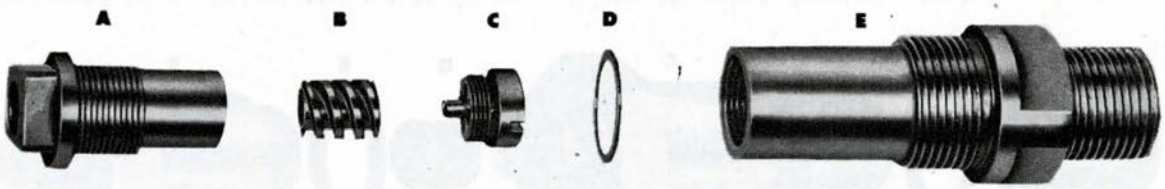

Figure 45A—Fuel Spray, disassembled—(A) Spray body; (B) Whirl; (C) Screw plug (note holes for passage of liquid); (D) Washer; (E) Holder

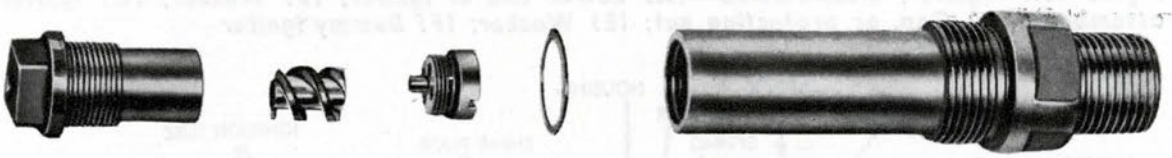

Figure 45B—Water Spray, disassembled (parts same as Fig. 45A)

The restriction effects the necessary difference in pressures. Low-pressure air from the restriction valve, by passing through the restriction, is reduced by about 25 p.s.i. in high power and 55 p.s.i. in low power before it enters the combustion flask. It is this **differential pressure** which forces the fuel and water into the combustion flask. In other words, the low-pressure air from the reducer, and behind the fuel and water, has a pressure about 25 to 55 p.s.i. greater than the low-pressure air from the restriction valve which enters the combustion flask.

At almost the instant of firing, air, fuel, and water enter the combustion flask in the order named. When the torpedo is fired, low-pressure air goes to the igniter; the igniter fires and ignites the combustible mixture of air and alcohol. The water prevents injury to the combustion flask by reducing the temperature of the mixture. Since the water, upon absorption of heat, turns to steam, the volume of gases going to the turbines is substantially increased.

A pipe from a nipple on the top of the combustion flask to the air-strainer body supplies low-pressure air to the depth and steering engines and the gyro reducer.

Fuel and Water Sprays

One fuel and two water sprays deliver fuel and water into the combustion flask in the form of a fine spray or mist. The sprays are similar in construction, as shown in the views of the parts disassembled, Figs. 45A and 45B; also Fig. 44. The holder for the water spray is longer than the holder for the fuel spray.

The fuel spray is calibrated to deliver the proper rate of flow for rapid and efficient combustion, and the water sprays are calibrated to deliver the proper rate of flow for rapid and efficient cooling and subsequent formation of steam. The sprays are calibrated for rate of flow, and not for size of opening.

Igniter

The igniter, which is installed in the combustion flask, is a combined pistol and double fuze, fired by low-pressure air from the reducing valve. The double charge blows out the breakaway head at the lower end of the igniter, (A) in Fig. 46A.

As the torpedo is launched, reduced-pressure air from the reducing valve passes to

the igniter. The air fires the igniter, which burns long enough to ignite the combustible mixture of air and alcohol in the combustion flask.

The igniter operates as follows: The shear nibs hold the piston and firing pins away from the caps until air pressure of about 250 p.s.i. is built up above the diaphragm, when, by suddenly yielding, the piston assembly and firing pins are forced down on the caps. The firing-pin nibs rest on a small steel shear plate, with holes of lesser diameter than the holes in the igniter tube; this is to insure that the sheared areas are not dragged along on their way down to the firing caps.

Igniters must not be shipped or stowed with torpedoes; hence a dummy igniter is used to replace the regular igniter under these circumstances. When the igniter is not fitted in the combustion flask, it must carry a cap, shown at (D) in Fig. 46A.

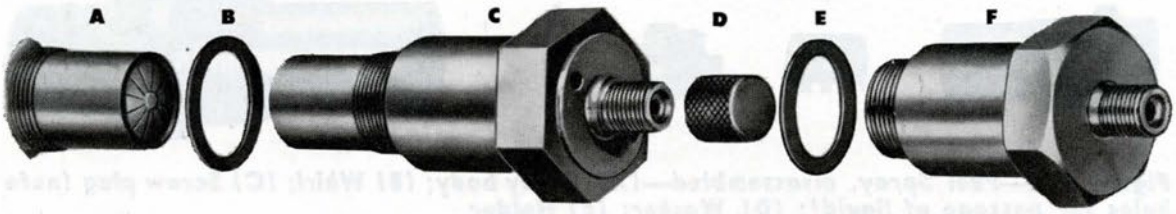

Figure 46A—Igniter, disassembled—(A) Lower end of igniter; (B) Washer; (C) Igniter assembled; (D) Cap, or protecting nut; (E) Washer; (F) Dummy igniter

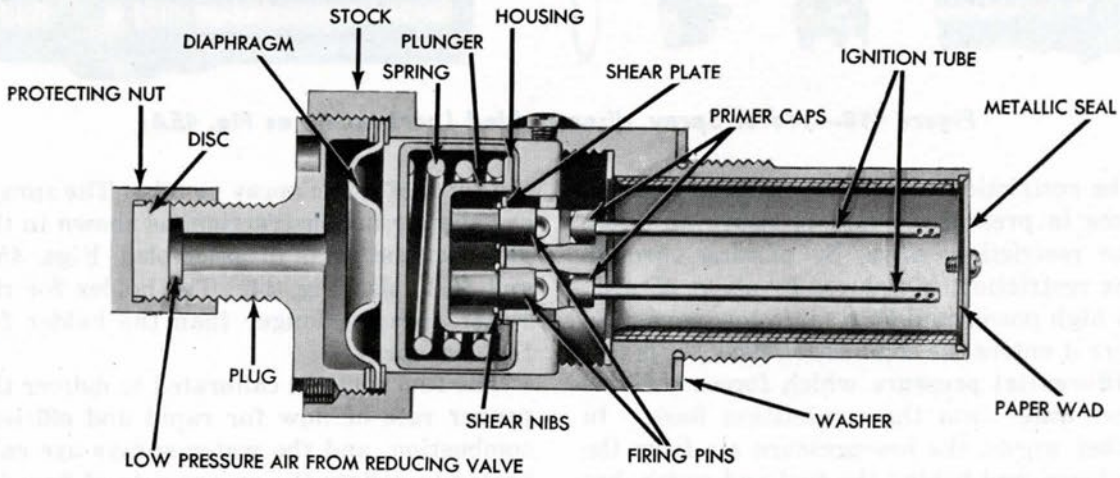

Figure 46B—Igniter, cut-away view

Propelling Mechanism

From the combustion flask, hot gases flow through the nozzles (see Fig. 44) to drive the turbines which supply the power for propelling the torpedo. The propelling mechanism includes the main engine, shown in Figs. 49A and 49B, the propellers, and the propeller sleeves and hubs. Various other units are essential to the operation of the propelling mechanism. These will be described, with the propelling mechanism, in the following paragraphs.

Speed-Change Mechanism, Nozzle and Nozzle Valve

The speed-change mechanism (Fig. 47; also see Figs. 40A and 40B) changes the restrictions in the air, fuel, and water delivery lines, and operates the nozzle valve, changing nozzles from high to low power, or vice versa. This is accomplished by a

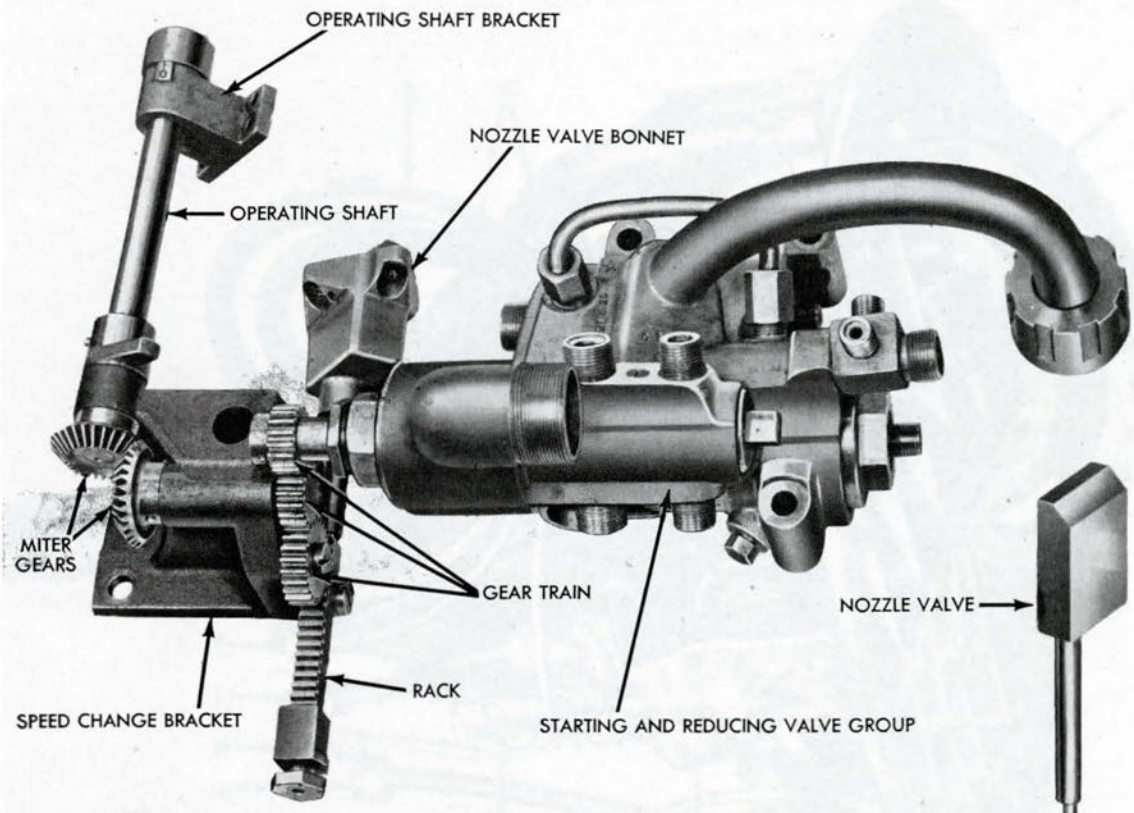

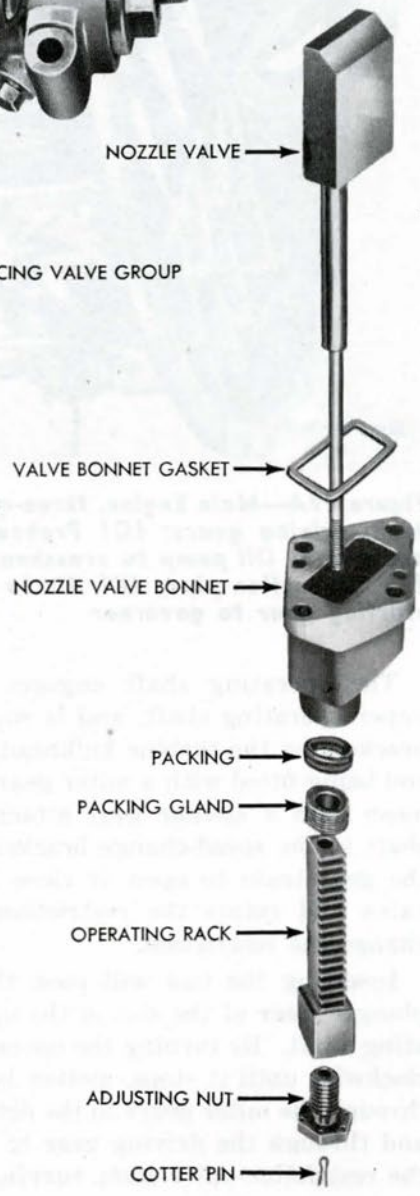

Figure 47 (above)—Speed Change Mechanism, assembled

Figure 48 (at right)—Nozzle Valve, disassembled

system of gears, mounted in a bracket on the turbine bulkhead, and manually operated by a shaft accessible from the outside of the torpedo.

To permit separation of the afterbody from the air flask, the operating shaft is made in two sections, known as the upper operating shaft and the operating shaft. The upper operating shaft is mounted in a bracket attached to the midship section, and has a socket for insertion of the setting tool. This socket is marked with the high- and low-speed setting on its upper end. It is designed to receive the setting tool in only one position, to enable the operator to verify the speed setting from the outside of the launching tube. The tool is turned clockwise for high speed, and counter-clockwise for low speed. Upon removal of the tool, a locking plunger will enter the tool recess and prevent further turning of the shaft.

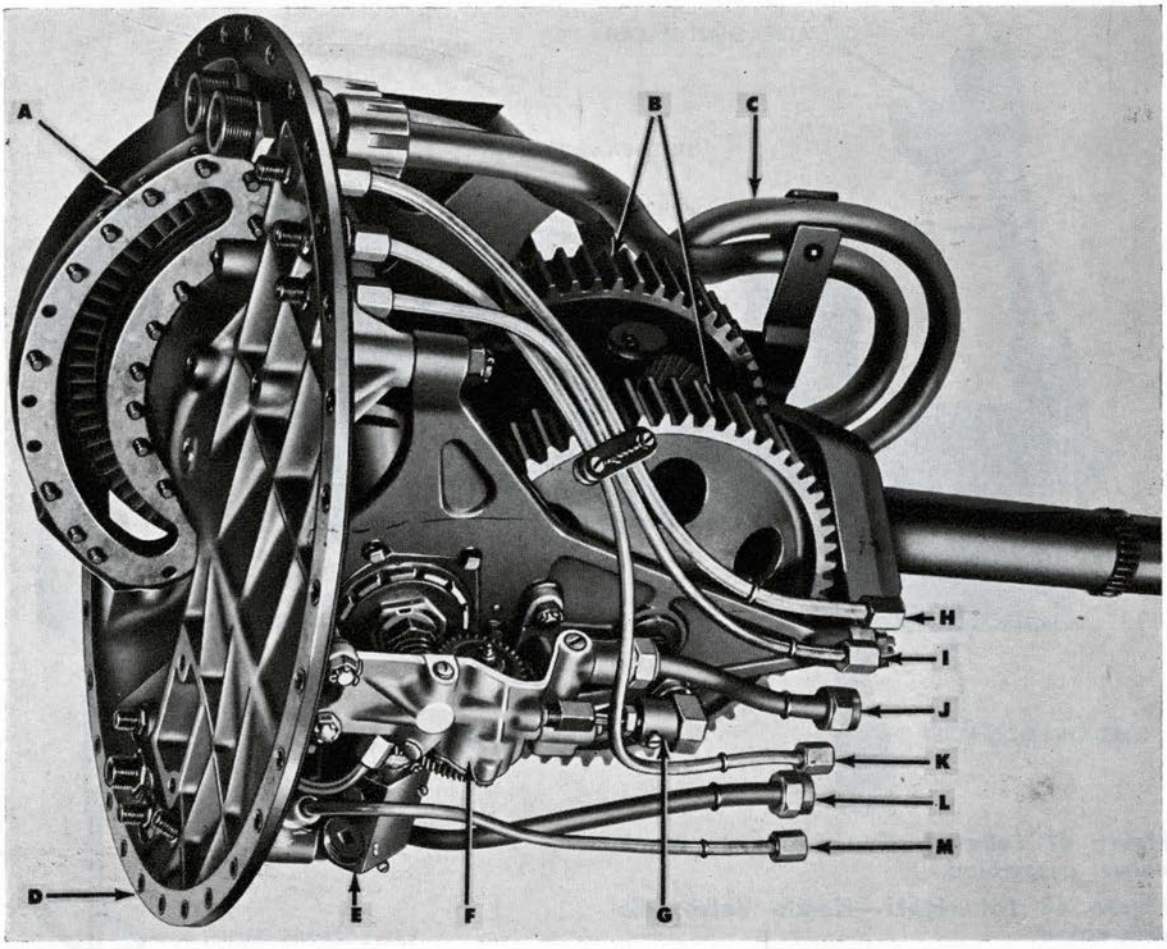

Figure 49A—Main Engine, three-quarter bottom view from port—(A) Turbine pocket; (B) Main driving gears; (C) Preheater coil; (D) Turbine bulkhead; (E) Governor; (F) Oil pump; (G) Oil pump to crosshead; (H) Air to starting gear; (I) Air to air strainer body; (J) Oil suction pipe; (K) Air to control valve; (L) Air to gyro spin; (M) Air return from starting gear to governor

The operating shaft engages with the upper operating shaft, and is supported in brackets on the turbine bulkhead, its lower end being fitted with a miter gear which, in mesh with a similar gear attached to the shaft in the speed-change bracket, operates the gear train to open or close the nozzle valve and rotate the restriction valve to change the restriction.

Inserting the tool will push the locking plunger clear of the slot in the upper operating shaft. By turning the operating shaft clockwise until it stops, motion is imparted through the miter gears to the driving gear, and through the driving gear to a gear on the restriction-valve stem, turning the high speed restrictions into line. At the same time, motion imparted through the idler gear to the rack on the nozzle valve stem will open the nozzle valve. Turning the operating shaft counterclockwise to its stop will change the speed setting to low speed.

The nozzle forging and the combustion flask in reality form a unit permanently connected to each other by a pipe. The nozzle unit is a steel forging which fits the opening on the horizontal projection of the upper portion of the turbine bulkhead, as shown in Fig. 49A.

The hot gases are conveyed through the nozzles, impinging upon the turbine buckets of the main engine by means of nozzle jets

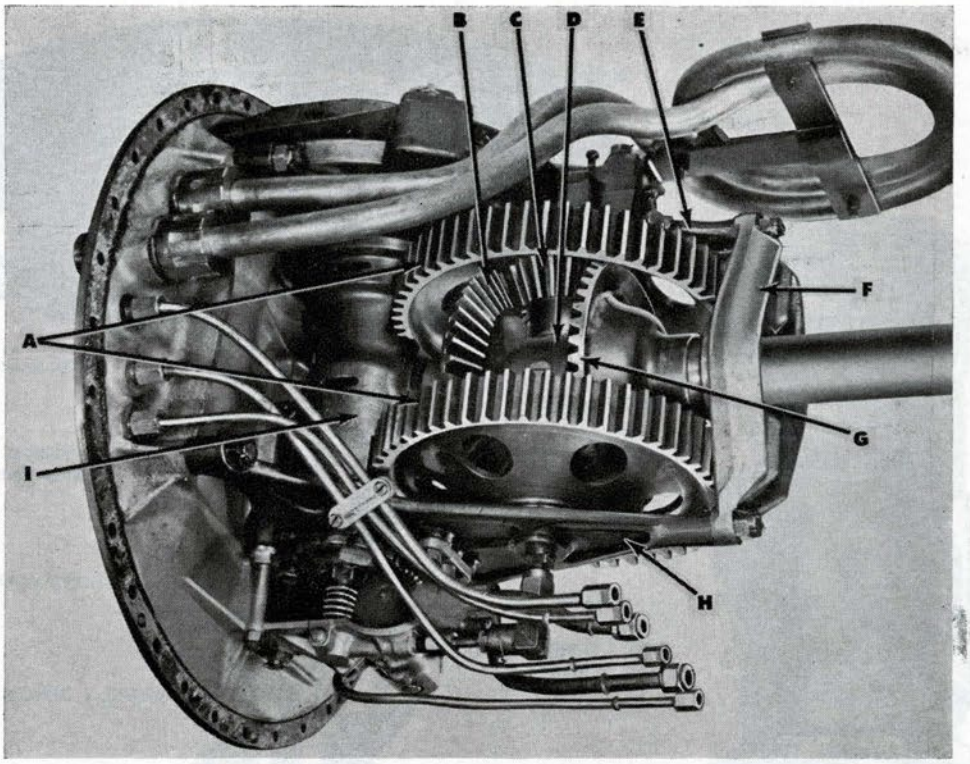

Figure 49B—Main Engine, side view from port—(A) Main driving gears; (B) Forward bevel gear; (C) Bevel pinion; (D) Crosshead; (E) Upper "A" frame; (F) Strut; (G) After bevel gear; (H) Lower "A" frame; (I) Spindle casing

(as shown in Fig. 44), two nozzle jets being utilized for low speed, and five for high speed. These nozzle jets are conical in shape, the smallest diameter being at the throat, the nozzle entrance being slightly rounded at its entering edge to provide easy approach for the gases. The diameter of the throat fixes the rate of flow of the gases at any given pressure, and is accordingly determined by the power requirements of the torpedo. From the throat the nozzle flares in a conical form, the amount of taper being fixed by the ratio of expansion desired.

The nozzles are placed so as to direct the gases to the turbine buckets. In passing through the conical portion of the nozzles, the gases expand from nozzle pressure to approximately afterbody pressure, and emerge from the mouth at high velocity (about 4000 feet per second).

In making the shift from one power to another, in the Torpedo Mk 14-3A, it is necessary to change the number of nozzles in use. In this torpedo, two nozzles are used in a low-power run, and three more are added for a high-power run. To accomplish this change, a valve (nozzle valve) (see Fig. 48) is installed in the nozzle forging between the second and third nozzles. This valve is carried loosely on a valve stem to permit its seating on a lapped face in the nozzle slot, under nozzle pressure. The valve bonnet, which is bolted to the nozzle forging, covers the valve and its slot, and also provides a bearing for the valve stem on which is mounted the rack for engaging the gearing of the speed-change mechanism.

Turbine Bulkhead

The forward end of the afterbody is closed by a bronze casting, known as the turbine bulkhead, shown in Figs. 49A and 49B, also in Figs. 40A and 40B.

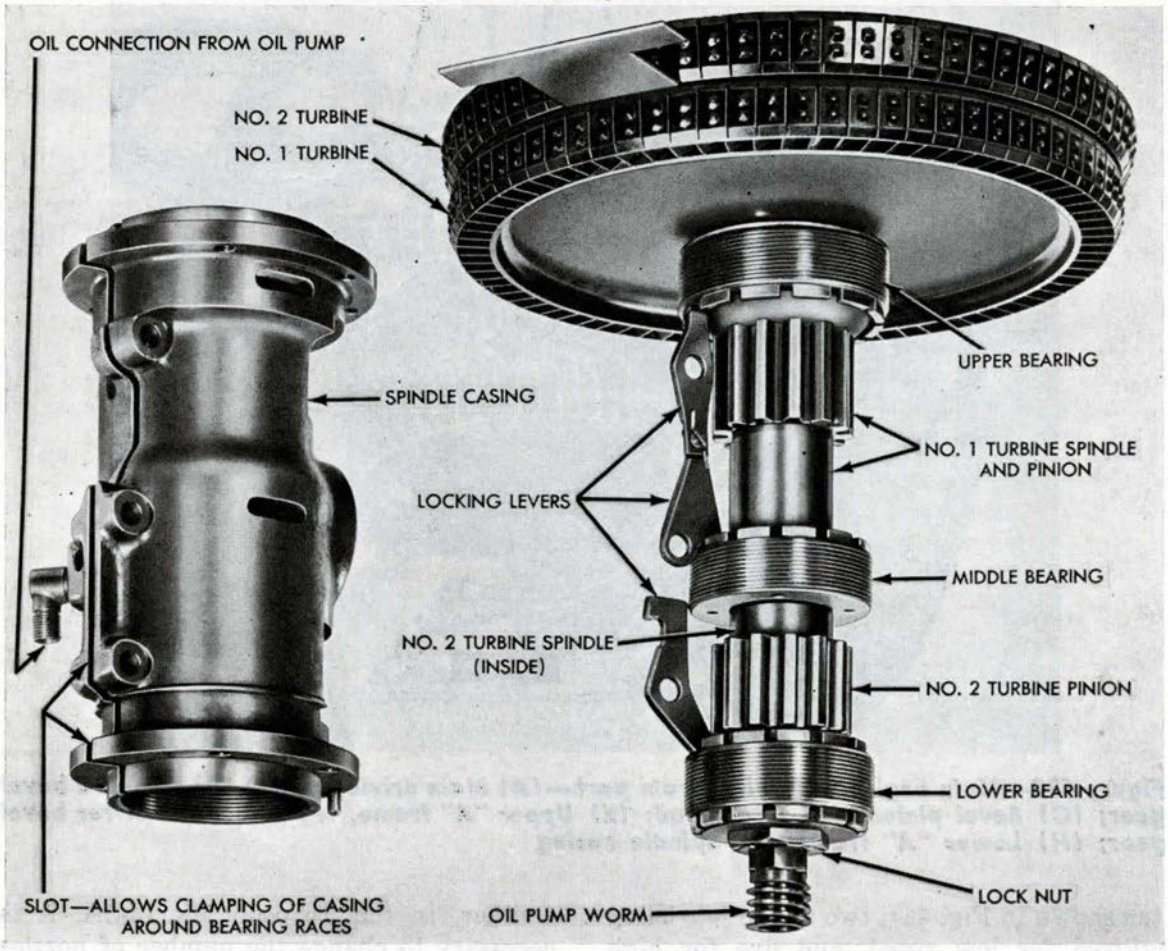

Figure 50—Spindle Casing and Bearings

The upper portion of the bulkhead projects forward, forming the turbine pocket, which has on its lower horizontal surface an opening for attaching the nozzle unit. The engine frames are bolted to this bulkhead on its after face, and thus it supports the entire engine assembly. Also, at its forward side it supports the nozzle unit, the combustion flask, and the starting, reducing, and restriction valve body, and the speed-change mechanism. Suitable nipples are mounted in the bulkhead for connecting the air-pipe lines that pass through the bulkhead, including the preheater pipe which is supported in a bracket extending from the upper "A" frame.

Main Engine

The main engine is of the turbine-driven, gear-reduction type. It is frequently spoken of as a **balanced** turbine engine, due to the fact that the turbines and gearing are in pairs, revolving in opposite directions, thus neutralizing the gyroscopic effect of the rotation of the turbines on the torpedo. The engine consists essentially of two turbine rotors, each mounted on a suitable spindle, one within the other, and a system of gearing for conveying the drive to the propeller shafts. Ball bearings are used wherever space permits.

The main engine is mounted in a frame supported on the turbine bulkhead. This frame is assembled in three sections, the upper and lower engine frames ("A" frames), and the engine-frame strut. The forward ends of the "A" frames are secured to the turbine bulkhead, and the after ends

are cross connected by the engine-frame strut, thus forming the engine frame. Mounted vertically in the center line of the forward portion of the engine frame is the turbine-spindle casing, and similarly mounted mid-way between the spindle casing and the strut is the crosshead. A top bearing holder mounted over the upper "A" frame completes the engine frame and fixed supports for the main engine bearing.

The turbine wheels are manufactured of alloy steel. The blades project radially from the periphery of the wheel, and are of practically crescent-shaped sections. Projections are machined on the end of each blade to form rivets for the turbine band. The turbine band is made up of individual segments, each overlapping the other, with sufficient clearance on the butt ends to allow for expansion; each segment is riveted to its blade. The second turbine wheel has slightly larger blades of the opposite curvature from the first turbine to expand the gases further after passing through the first turbine, and thus maintain the velocity until expanded through both turbines. Tapered holes and keyways in the center of the turbine wheels permit assembling to the turbine spindles.

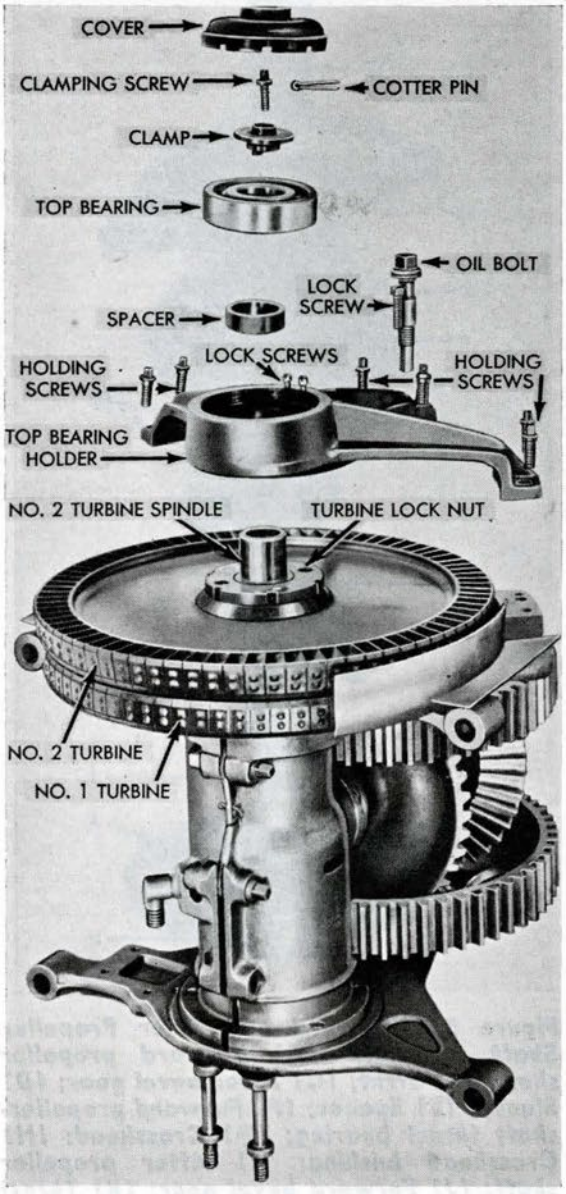

Figure 51—Top Bearing, disassembled

The turbine spindles are mounted in the spindle casing, which, in turn, is bolted to the upper and lower engine "A" frames. The crosshead supports the main driving gears and bevel pinions, and is bolted to the engine "A" frames.

The turbine spindles are supported both radially and axially by four ball bearings. Three of the bearings are in the spindle casing (see Fig. 50), and the fourth is located above the spindle casing in the top bearing holder (see Fig. 51), which is secured to the upper "A" frame. The forward side of the spindle casing is slotted, and at each bearing a bolt is provided for clamping the casing around the ball races. The upper face of each outer race of the bearings in the spindle casing is notched, and locking fingers mounted in the slot (one for each bearing) engage with the notches, as shown in Fig. 50. By this means, a degree of adjustment is provided whereby the desired clearance between the face of the nozzle and the first turbine wheel, and clearance between the turbine wheels, may be obtained. The upper end of the second turbine spindle is supported by the top bearing in the top bearing holder. The turbine spindles carry the pinions which transmit power to the main driving gears.

The main driving gears, with bevel pinions, are mounted on the crosshead. (See Fig. 52.) The bevel pinions mesh with bevel gears, one on each propeller shaft.

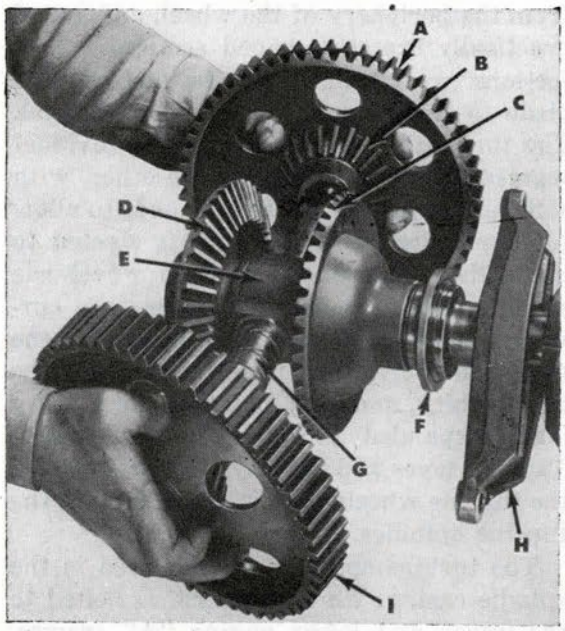

Figure 52—Crosshead, with Main Driving Gears and Bevel Pinions—(A) Main driving gear; (B) Bevel (driving) pinion; (C) After bevel gear; (D) Forward bevel gear; (E) Crosshead; (F) Thrust race; (G) Main driving gear bushings; (H) Strut; (I) Main driving gear

The arrangement is such that the unequal turning effort of the turbines is converted to equal turning effort on the propeller shafts. The bearings for the main driving gears and bevel pinions are bronze bushings, lack of space precluding the use of ball bearings.

The drive from the engine to the propellers is conveyed through the propeller shafts, of which there are two. The **forward** propeller shaft is tubular in form. It passes through the strut, as shown in Figs. 53 and 54, and is keyed at its forward end to the after bevel gear. A self-aligning ball thrust bearing is interposed between this gear and the crosshead. A collar is turned on the shaft, just forward of the strut, and serves as a bearing for the inner race of the ball bearing in the strut. This bearing is designed to carry both radial and thrust loads. At its after end, this shaft is supported in a bearing in the after bulkhead. Its extreme after end is provided with keyways for attachment to the forward propeller sleeve.

Both the driving torque and the thrust of the forward propeller are carried through this shaft, the latter being partly resisted by the tendency of the bevel gear and pinion to separate under the driving load. The thrust of the propeller is somewhat the greater, and this difference in the forces is carried by the ball bearing to the crosshead, and by the crosshead to the turbine frame, thence to the turbine bulkhead. The shaft

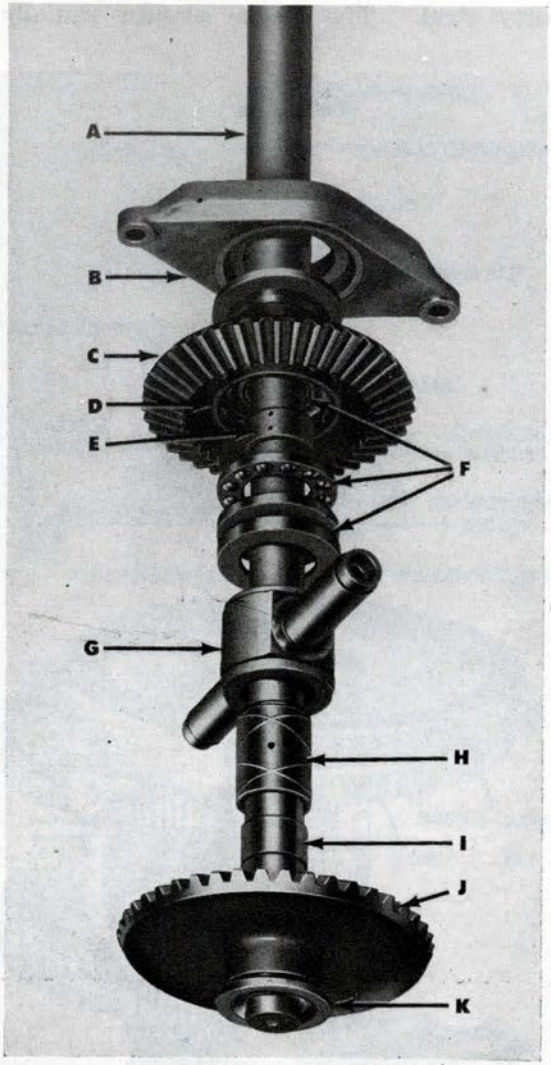

Figure 53—Forward and After Propeller Shaft Assembly—(A) Forward propeller shaft; (B) Strut; (C) After bevel gear; (D) Sleeve; (E) Spacer; (F) Forward propeller-shaft thrust bearing; (G) Crosshead; (H) Crosshead bushing; (I) After propeller shaft; (J) Forward bevel gear; (K) Thrust washer

has a spur pinion integral with it, just aft the strut, for driving the gyro mechanism.

The after propeller shaft is solid, and is carried within the forward propeller shaft. At the crosshead, it runs in a floating bronze bushing. At its forward end, the shaft is keyed to the forward bevel gear. Interposed between the forward bevel gear and a bearing washer on the shaft at this point and the turbine spindle casing, is a ball-bearing thrust washer. The after end of the after propeller shaft is supported in bronze bushings between it and the forward propeller shaft.

A grease retainer ring is installed in the forward propeller sleeve around the after propeller shaft to prevent loss of grease, and to minimize water leakage between the shafts into the afterbody. A U-seal and retainer are provided, as shown in Fig. 55, further to prevent leakage of water between the shafts into the afterbody. The extreme after end of the after propeller shaft is provided with keyways for attaching to the after propeller sleeve, and a nut for securing the sleeve. The driving torque and thrust of the after propeller are carried through this shaft; the thrust, in addition to the tendency of the forward bevel gear and the pinions to separate, is taken by the ball thrust washer and carried by it to the spindle casing and through the turbine frames to the turbine bulkhead.

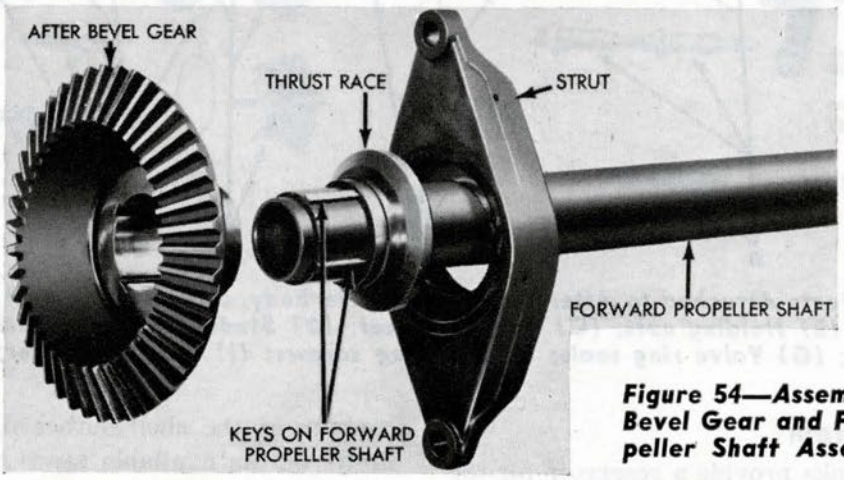

Figure 54—Assembly of After Bevel Gear and Forward Propeller Shaft Assembly

To prevent leakage around the forward propeller shaft, a U-seal and retainer are provided (see Fig. 56), which are secured to the after bulkhead bearing.

The propeller shafts pass through the after bulkhead of the afterbody and into the tail section of the torpedo, where the other parts of the propelling mechanism are assembled. The parts on the after bulkhead of the afterbody are shown disassembled in Fig. 56.

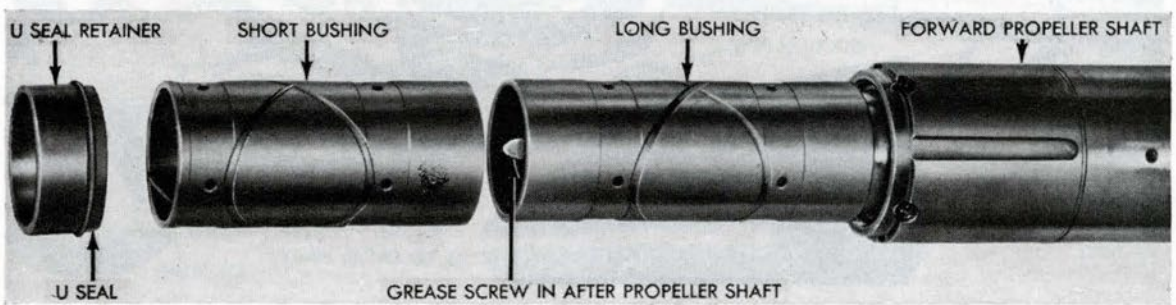

Figure 55—Propeller Shaft Bushings and U-Seal

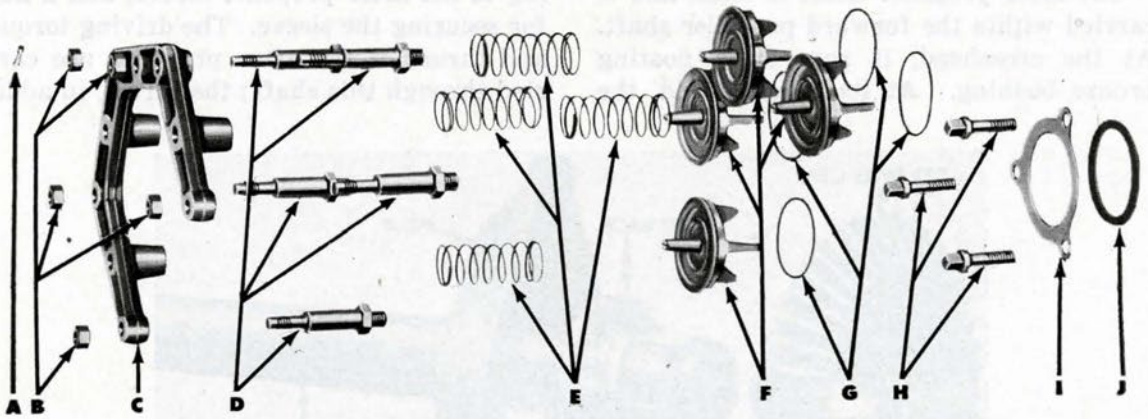

Figure 56—Parts Attached to After Bulkhead of Afterbody, disassembled—(A) Cotter pins (five used); (B) Holding nuts; (C) Valve bracket; (D) Studs; (E) Valve springs; (F) Exhaust valves; (G) Valve ring seals; (H) Holding screws; (I) U-seal retainer; (J) U-seal;

Oiling System

Two oil tanks provide a reservoir for the oil that lubricates the main engine, as shown in Figs. 57 and 58. They are located abaft the main engine and along the sides of the afterbody shell, conforming to the contour of the shell outboard, and to the limits of the available space of the afterbody interior.

The tanks are filled through the oil-filling flange, located on the top center line of the afterbody, and two filling pipes leading to

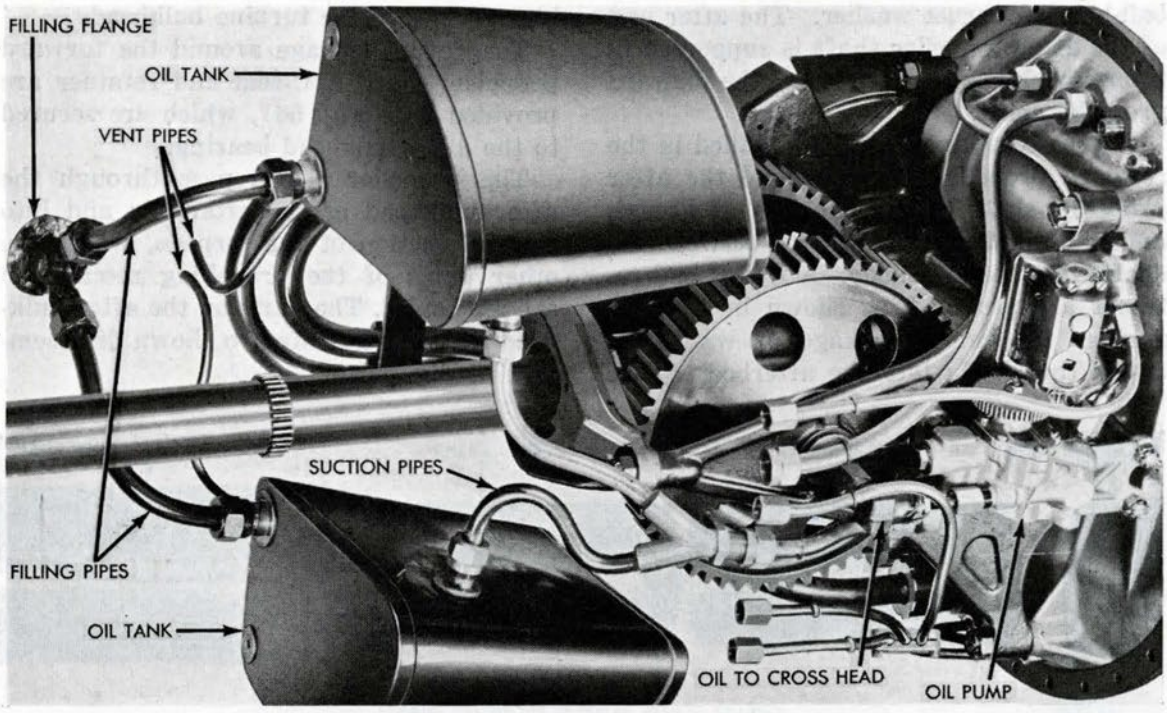

Figure 57—Oil Pump, Oil Tanks, and Connections, bottom view (Note: Tanks are secured to afterbody shell)

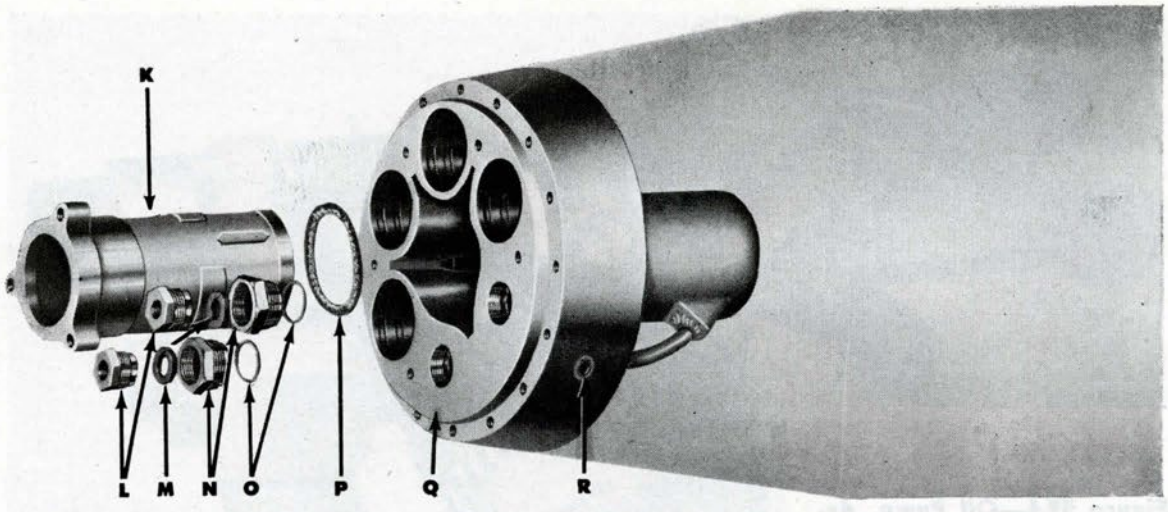

(K) After-bulkhead bearing; (L) Glands; (M) Packing; (N) Stuffing boxes; (O) Washers; (P) Washer; (Q) After bulkhead; (R) Water outlet for cooling after bearing

the tanks. Vent pipes are located as shown in Fig. 58. Each vent pipe connects to a check-valve body, from which a perforated curved pipe runs into the tanks. The curved pipes contain ball checks, which drop into their seats when the torpedo is upside down, and prevent the oil from running into the afterbody (see Fig. 60).

The oil pump (Figs. 59A, 59B, 59C, and 59D) is driven by the worm wheel, which meshes with the worm screwed to the lower end of the second turbine spindle. The oil is

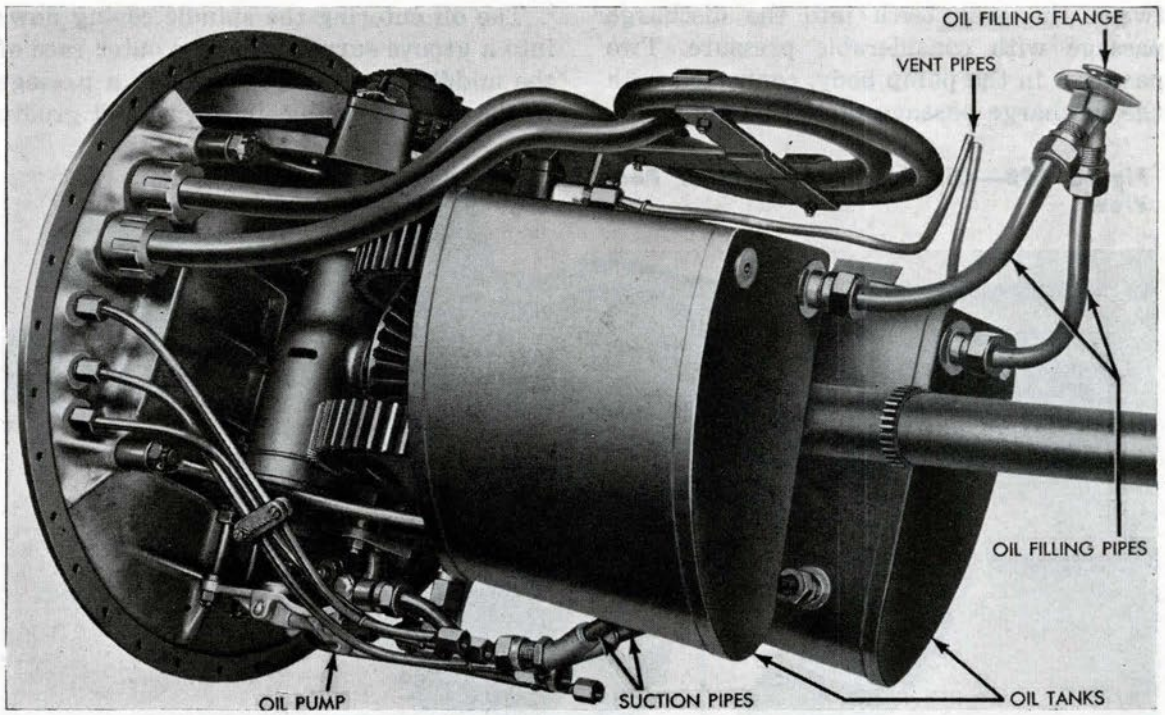

Figure 58—Oil Pump, Oil Tanks, and Connections, viewed from port (Note: Tanks are secured to afterbody shell)

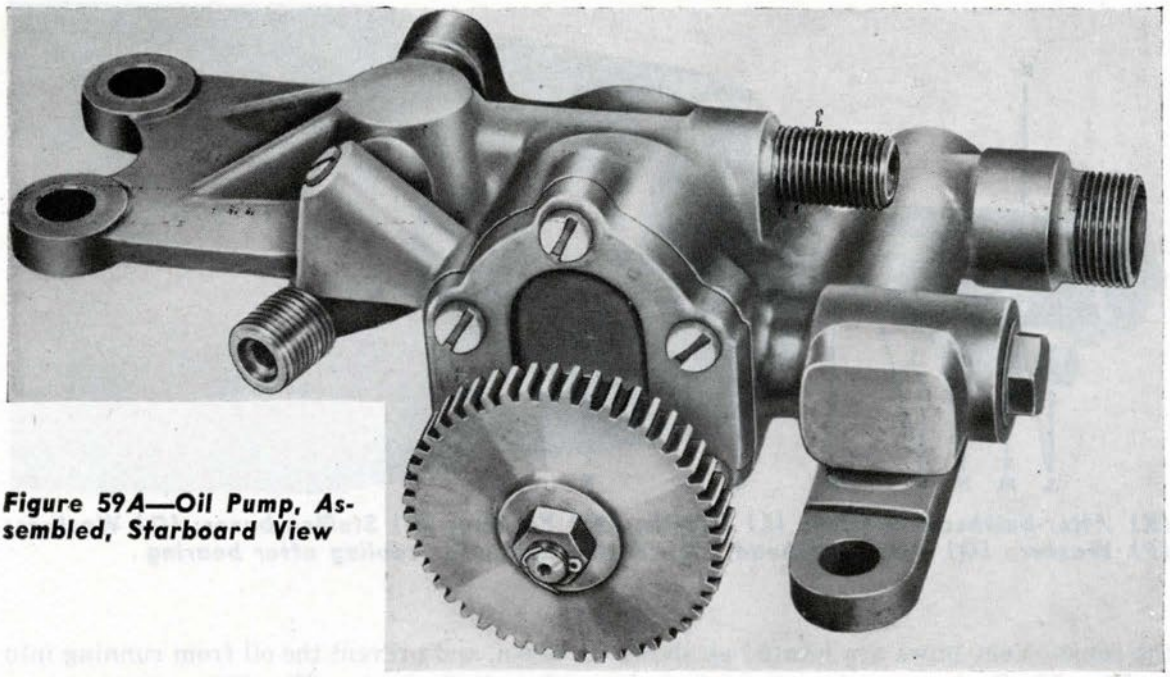

Figure 59A—Oil Pump, Assembled, Starboard View

carried from the suction side of the pump to the discharge side by a pair of gears which run in the oval shaped chamber. The meshing of the gears on the discharge side of the chamber drives the oil out from between the gear teeth into the discharge passage with considerable pressure. Two passages in the pump body, connected with the discharge passage of the pump, terminate in nipples, the forward nipple being connected to a pipe leading to the turbine spindle casing (see Fig. 38), and the after nipple being connected by a fitting to the crosshead.

The oil entering the spindle casing flows into a groove surrounding the outer race of the middle bearing, and through a passage in the spindle casing, into a second groove

Figure 59B—Oil Pump, Assembled, Port View

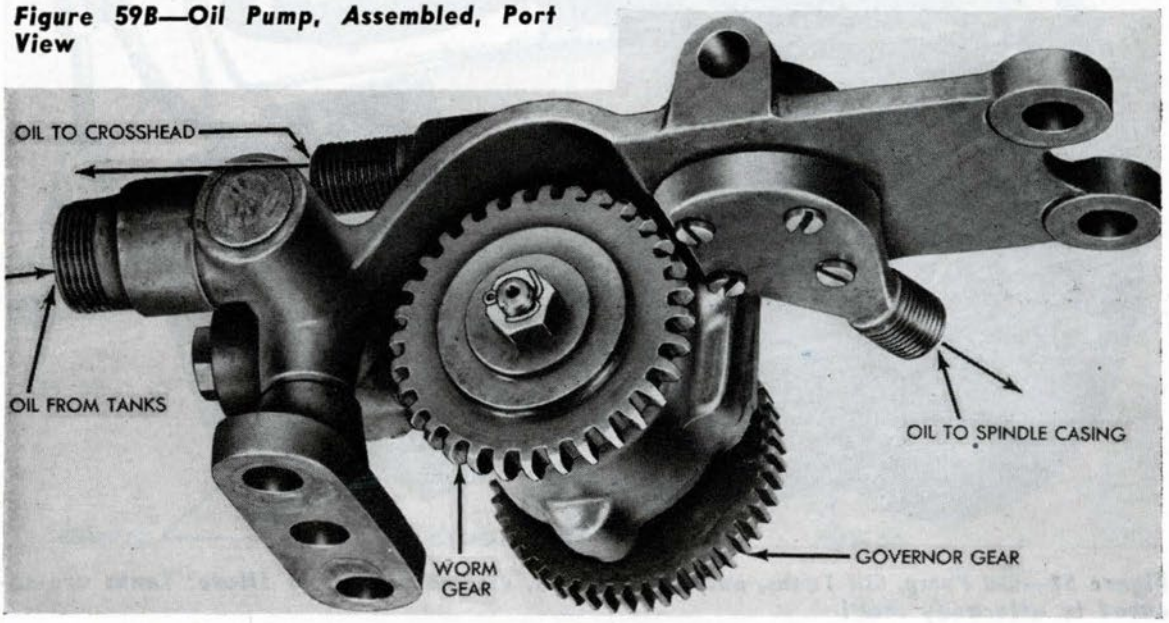

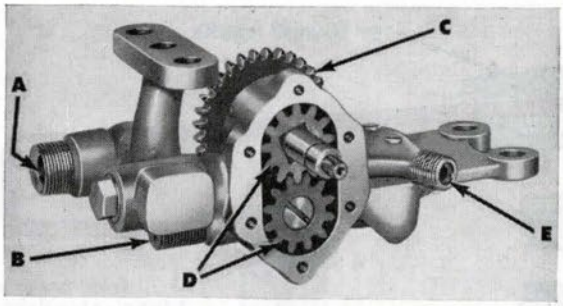

Figure 59C—Oil Pump, Showing Pump Gears—(A) Oil from tanks; (B) Oil to crosshead; (C) Worm gear; (D) Pump gears; (E) Oil to spindle casing

surrounding the outer race of the upper bearing. The outer races of the upper and middle bearings are drilled radially, thus permitting oil from the grooves in the spindle casing to enter the upper and middle bearings for lubrication. The excess oil from the upper and middle bearings falls to the bottom of the spindle casing, where it lubricates the bottom bearing (see Fig. 60).

Oil entering the lower end of the crosshead is distributed through suitable openings to the main driving gear and bevel-pinion bushings, and to the crosshead bushing, a restriction being provided to regulate the amount of oil entering the bushing. Oil reaching the upper end of the crosshead enters a drilled bolt, which acts as a passage to the top bearing holder, which is drilled to allow the oil to reach the top bearing for its lubrication, after passing through a restriction.

The entire oiling system is shown in Fig. 60.

Smoke Prevention

Unless some means are taken to prevent it, these torpedoes will have a smoke wake in addition to the bubble wake. This is caused by engine oil entering the exhaust and being partly burned by the heat of the gases. It is desirable, for a war shot, to render the wake of the torpedo as nearly invisible as possible. To this end, it is necessary that all engine oil be excluded from the exhaust.

Underneath the turbine, and attached to the top engine frame, is a sheet-metal pan (the turbine oil guard) flared at its periphery (see Fig. 61). This pan, with the horizontal bulkhead, serves to prevent the splash of oil from the gears and turbines into the exhaust system. Also, above the upper turbine spindle bearing is a baffle or oil-deflector ring (see Fig. 61), which serves to prevent the entry of oil from the spindle bearing to the exhaust chamber.

The turbine oil guard, the bulkhead, and

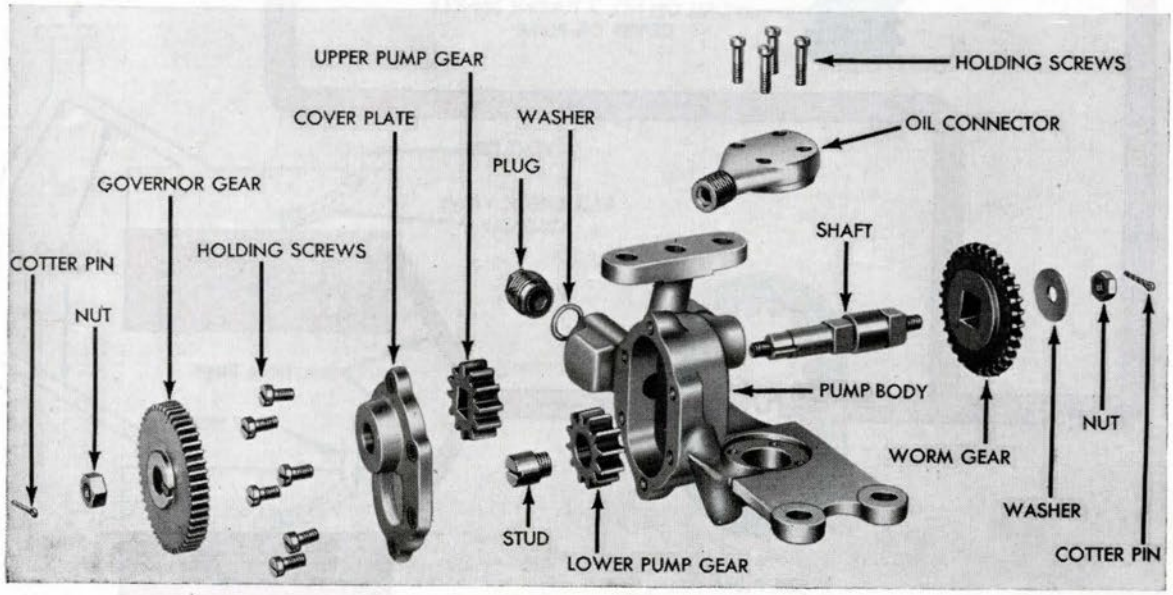

Figure 59D—Oil Pump, Disassembled

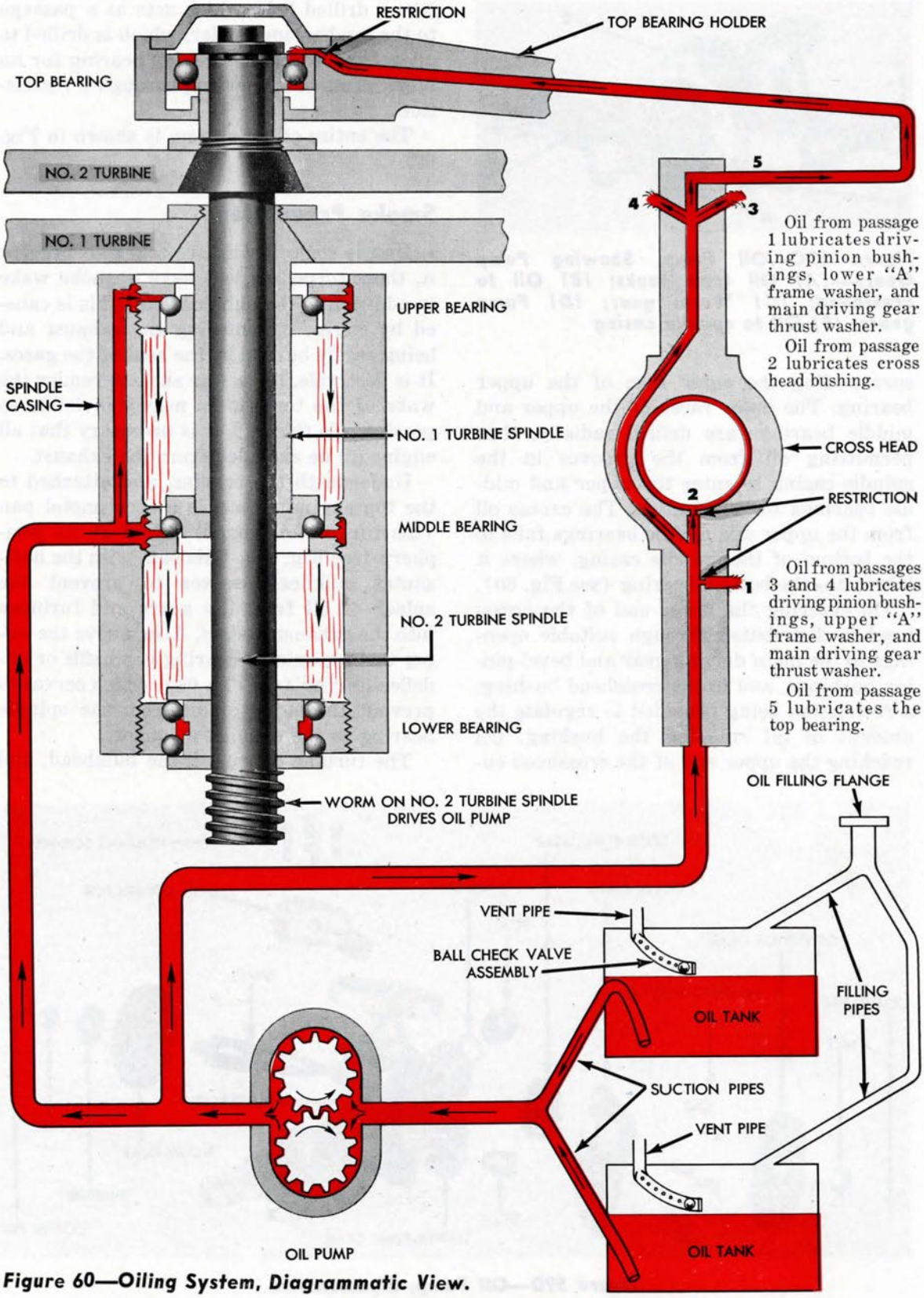

Figure 60—Oiling System, Diagrammatic View.

the oil deflector ring are provided to aid in the elimination of smoke. It should be noted, however, that if the torpedo is rolled over in preparation for a run when there is oil in the afterbody, the oil will enter the exhaust chamber, and the torpedo will smoke heavily until the oil is burned up.

Exhaust System

The exhaust system (Figs. 62 and 63) is devised to carry off the turbine gases with the least back pressure, with the least circulation through the afterbody, and with the least amount of surface indication. The system consists of a semi-closed chamber above the turbines, two exhaust tubes leading aft, and branching into four tubes leading to exhaust ports in the after bulkhead; and hollow propeller sleeves with escape holes in their sides, through which the gases are expelled.

The turbine exhaust chamber is formed within the afterbody shell by vertical and horizontal bulkheads which, supplemented by the turbine oil guard below the turbines and the turbine bulkhead, form a semi-tight chamber.

The exhaust tubes are telescoped over short sleeves, with flanged collars, attached to the vertical bulkhead with screws. The after end of each tube is slipped into suitable openings in the after bulkhead and held in place by rolling a beaded projection into a recess cut around the opening. By removing the flanged sleeves and prying under the beaded ends, the tubes may be withdrawn from the afterbody.

The four exhaust valves are supported in a bracket secured to the after bulkhead.

Three guide vanes (as shown at "E" in Fig. 63) on the inboard face of each valve insure proper alignment of the valve with its seat in the after bulkhead. A raised ring on the outboard face of the valve serves as a retainer for the forward end of the exhaust-valve spring. The tapered valve stem on the outboard face of the valve serves as a rough guide for the valve, and its presence also facilitates the machining and lapping of the valve. Ring seals are provided on the valves as seats to prevent leakage of water into the afterbody while the torpedo is in a submerged tube. Since these ring seals burn off during the run, it is necessary to lap the valves to their seats for exercise runs.

Springs hold the valves on their seats until the exhaust gases build up to a pressure slightly greater than the surrounding water pressure.

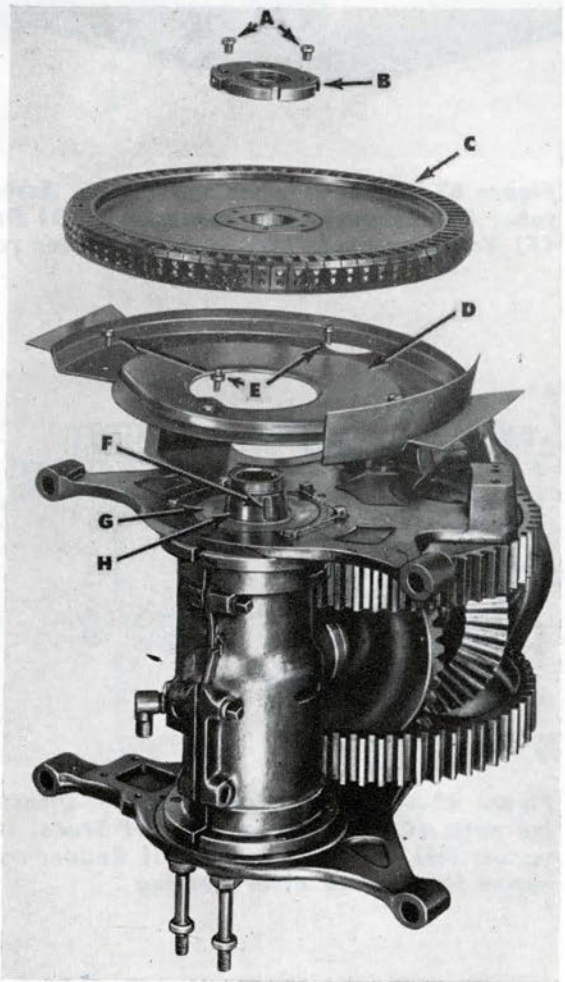

Figure 61—Main Engine, Partially Disassembled—(A) Locking screws; (B) Turbine lock nut; (C) No. 1 turbine; (D) Turbine oil guard; (E) Holding screws; (F) Keys; (G) Oil deflector ring; (H) No. 1 turbine spindle

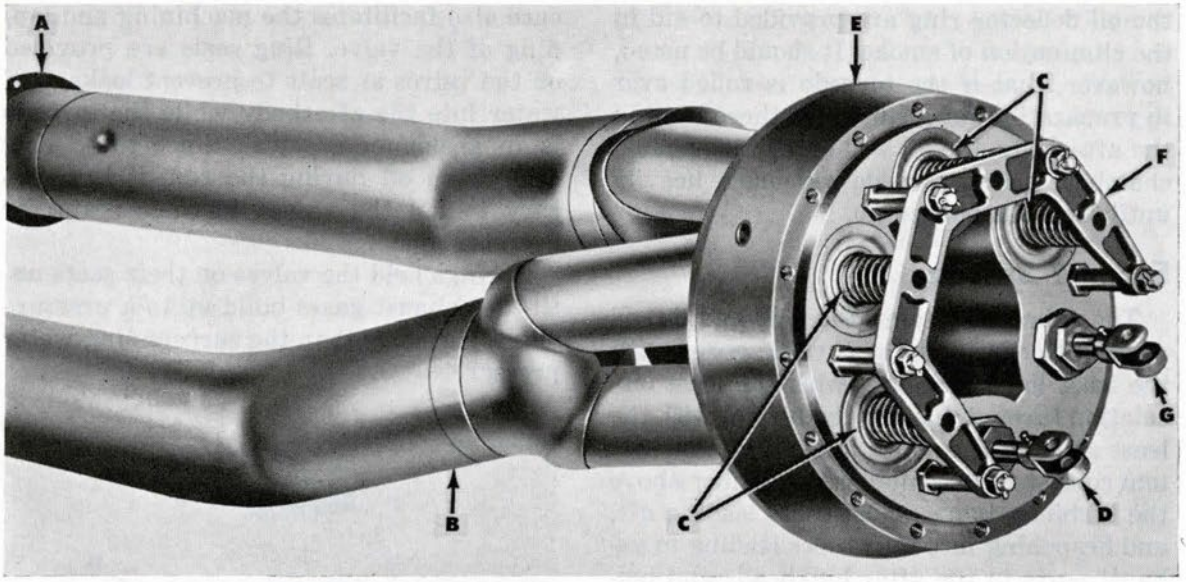

Figure 62—Exhaust Tubes and Valves, Assembled—(A) Exhaust-tube thimbles; (B) Exhaust tube; (C) Exhaust-valve assemblies; (D) Depth-rudder rod connection; (E) After bulkhead; (F) Valve bracket; (G) Steering-rudder rod connection

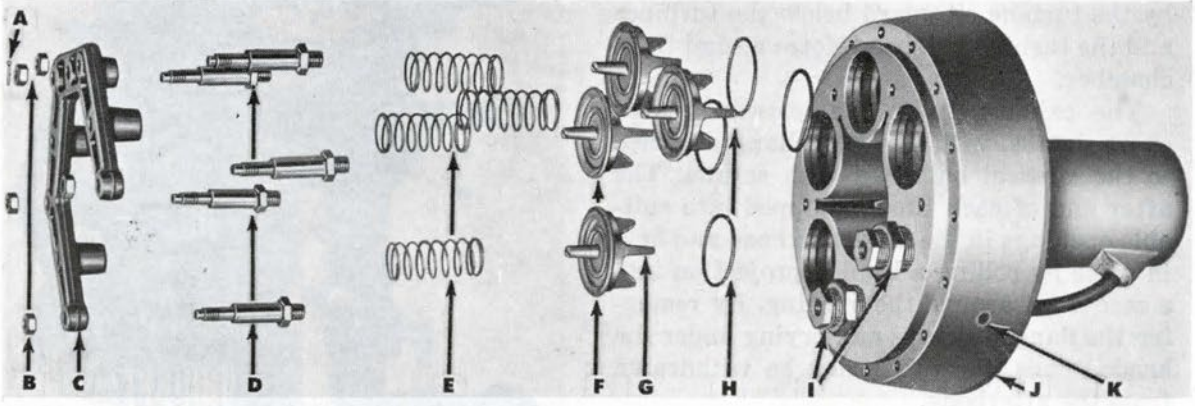

Figure 63—Exhaust-Valve Assembly, Disassembled—(A) Cotter pin (five used); (B) Holding nuts; (C) Valve bracket; (D) Studs; (E) Valve springs; (F) Exhaust valves; (G) Guide vanes; (H) Valve ring seals; (I) Rudder-rod stuffing boxes; (J) After bulkhead; (K) Water outlet for cooling after bearing

Chapter 5

THE TAIL SECTION

General Construction

The tail section is shown in Figures 64A, B, C, and D. This section consists principally of those surfaces required to propel the torpedo and to control it in its water travel. The moving parts of this section are actuated by the various mechanisms in the afterbody. All the parts are mounted on the main

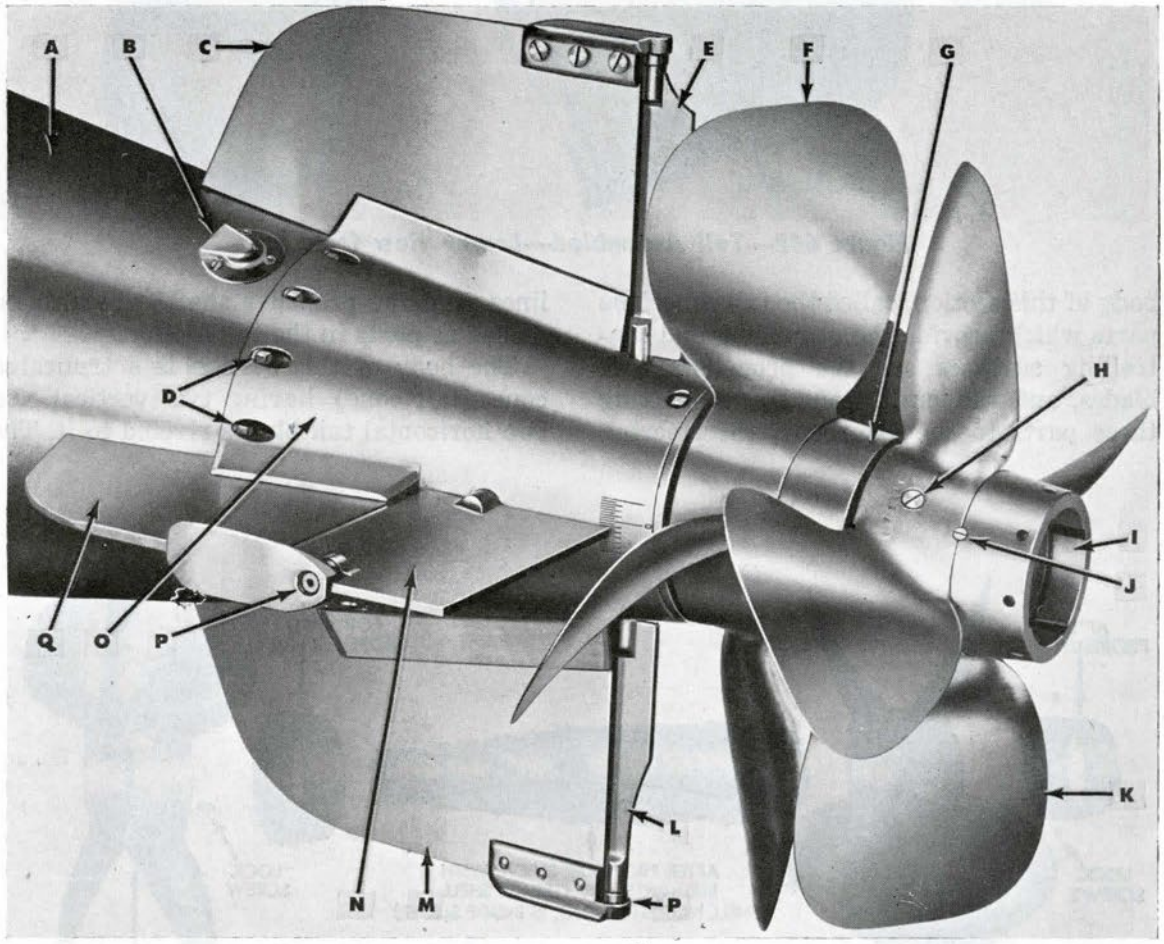

Figure 64A—Tail, Assembled, Upper view from port—(A) Afterbody; (B) Water scoop; (C) Vertical tail blade; (D) Joint screws; (E) Upper steering rudder; (F) Forward propeller; (G) Forward-propeller lock nut; (H) Grease plug; (I) After-propeller lock nut; (J) Lock screw; (K) After propeller; (L) Lower steering rudder; (M) Vertical tail blade; (N) Depth rudder; (O) Tail Cone; (P) Outboard bearings; (Q) Horizontal tail blade

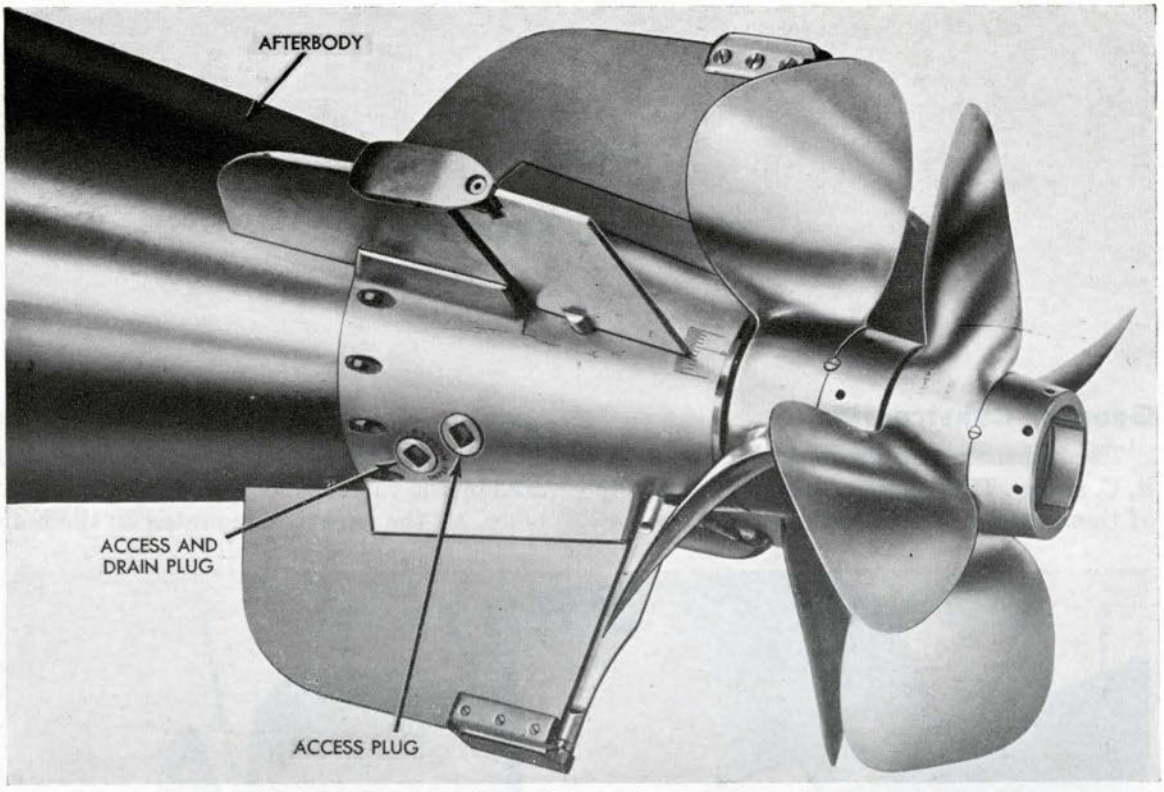

Figure 64B—Tail Assembled—Lower view from port

body of this section, called the tail cone. The parts which provide the propelling and controlling surfaces are the propellers, tail blades, and rudders. Means for connecting these parts to the afterbody, the steering lines, and the propeller shafts are also included as parts in the tail section.

The body of this section is a truncated cone (tail cone) having two vertical and two horizontal tail blades riveted to it. The

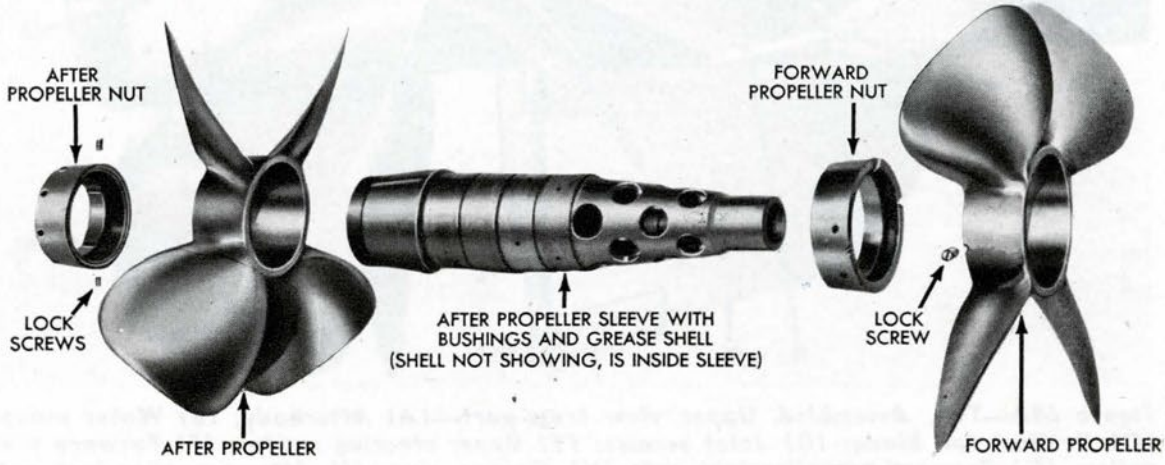

Figure 64C—Tail, Disassembled

forward end of the tail cone is drilled for securing the tail section to the afterbody with joint screws. A shoulder in the after end contains tapped holes for the screws with which a bronze bearing (tail bearing) for the forward propeller sleeve is held in place.

The tail bearing supports the forward propeller sleeve, which in turn supports the after propeller sleeve by means of four bushings interposed between the sleeves. A grease container is provided in the after end of the tail. It connects with the grooves in the tail bearing and provides a means for packing the tail bearing. Removal of a plug gives access to the grease container.

The grease container described above is being replaced by a grease reservoir (shell) contained in the after propeller sleeve in torpedoes of new manufacture.

A grease (packing) retainer ring is installed in the forward propeller sleeve around the after propeller shaft to prevent loss of grease and entry of sea water, as described in Chapter 4.

Enclosed in the tail cone are the depth steering-rudder yokes, (Fig. 65), the rudder-adjusting rods and eyes, and the forward and after propeller sleeves. To the sleeves are attached the propeller hubs, on which the propellers are mounted. The after propeller hub is made integral with the after propeller sleeve. The propellers are secured to their hubs with lock nuts and screws.

The after ends of the rudder-adjusting rods slip over studs in the yokes, and are secured by cotter pins, brass washers being interposed on the studs between the rudder-adjusting rods and the yokes. The forward end of each rudder-adjusting rod is threaded to receive an eye. Turning the eye serves to lengthen or shorten the adjusting rods. The adjustment is clamped by means of a clamp screw. The eyes are connected by linkages to the depth and steering engines. The steering rudders are designed to minimize rudder interference with the water ahead of the propellers. It will be noted that the lower section of the steering rudder is smaller than the upper, to minimize the tendency of a torpedo to heel during the turn on an angle shot.

At the center of the port side of the tail cone are graduations by means of which the depth-rudder readings are taken. A zero graduation is stamped on the starboard side for the purpose of aligning the top surfaces of the depth rudders. The depth and steering rudders (each made in two sections) are mounted in bearings directly abaft the tail blades (Fig. 64C).

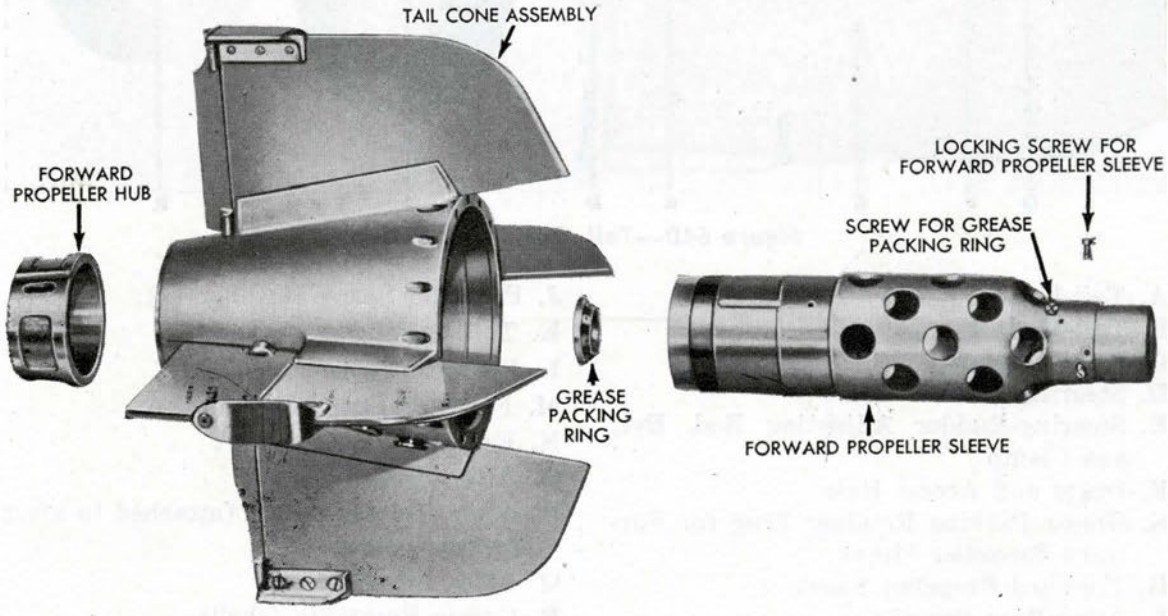

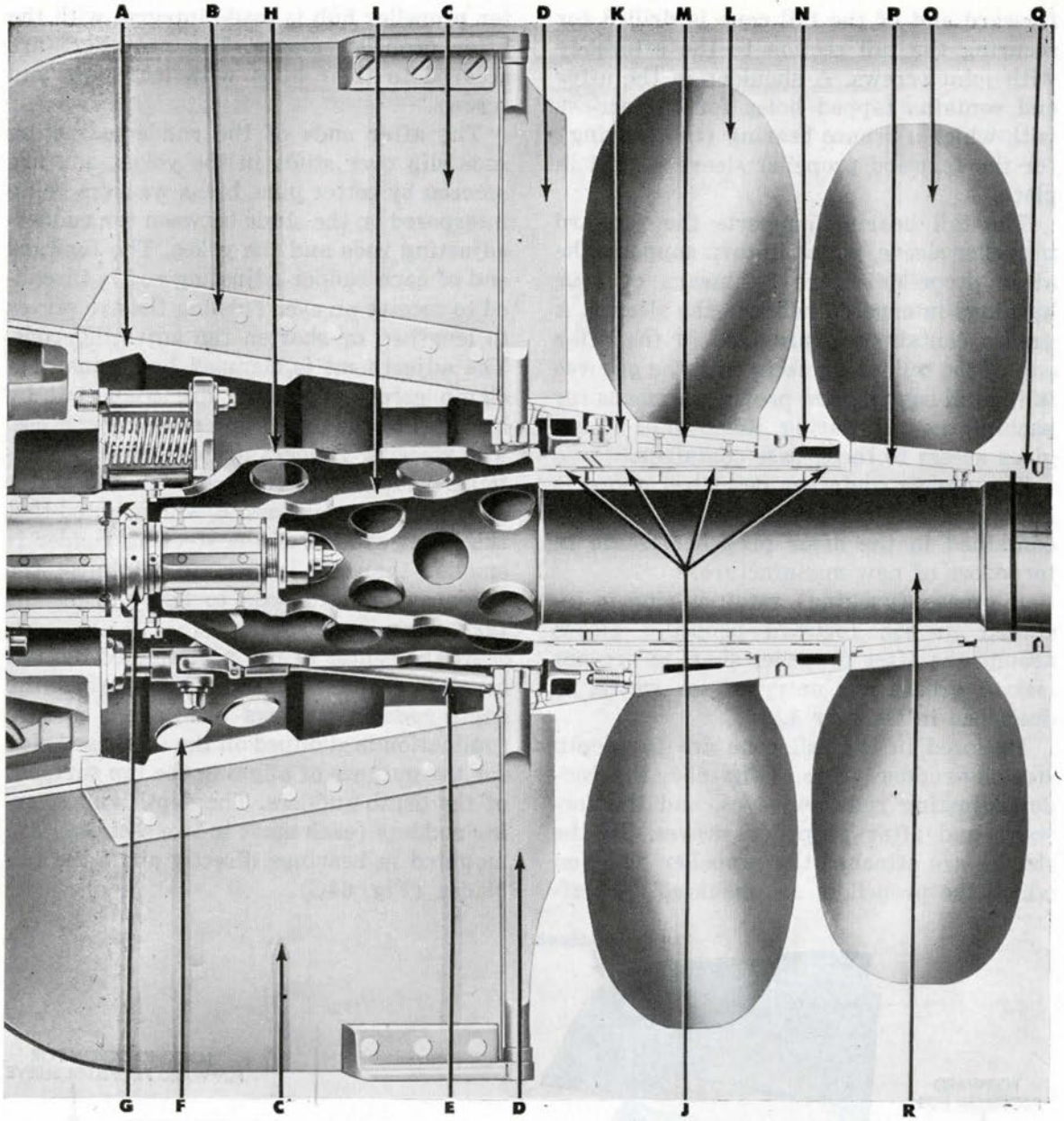

Figure 64D—Tail, Cut-Away View

A. Tail Cone
B. Tail-Blade Flanges
C. Vertical Blade
D. Steering Rudder
E. Steering-Rudder Adjusting Rod, Eye, and Clamp
F. Drain and Access Hole
G. Grease-Packing Retainer Ring for Forward Propeller Sleeve
H. Forward Propeller Sleeve
I. After Propeller Sleeve
J. Propeller Sleeve Bushing (4)
K. Tail Bearing
L. Forward Propeller
M. Forward Propeller Hub
N. Forward Propeller Nut
O. After Propeller
P. After Propeller Hub (attached to after propeller sleeve)
Q. After Propeller Nut
R. Grease Reservoir (shell)

Movement of the rudders is effected by the rudder yoke through connection of the yoke to the rudder rods extending from the afterbody. The connecting piece is known as the rudder-adjusting rod and eye. The eye is adjustable on the rod through a clamped screw connection and it is accessible through access holes in the tail cone.

Propeller Sleeves

The propeller sleeves are short, hollow shafts, which connect to the propeller shafts extending through into the tail section from the afterbody. These propeller sleeves are part of the tail assembly and carry the propellers, as shown in Figs. 64C and 64D.

The forward propeller sleeve is tubular in form, and connects at its forward end with the forward propeller shaft by means of keys which fit into keyways in the shaft, a neat slip fit being provided. The sleeve is further locked to the shaft by means of four holding screws.

The after end of the forward propeller sleeve is supported in the tail bearing secured to the after end of the tail cone. On the extreme after end of the forward propeller sleeve are mounted the forward propeller and hub. The sleeve has a shoulder forward of the tail bearing. There is no thrust contact between this shoulder and the tail bearing. A considerable longitudinal play is provided for this sleeve in order that the expansion of the forward propeller shaft, due to temperature in the afterbody, will not bind the bearing.

The after propeller sleeve is also tubular in form, and connects at its forward end with the after propeller shaft by means of keys fitting into keyways in the shaft. The sleeve is further locked to the shaft by means of a nut, which screws on the after propeller shaft and draws the sleeve up against a shoulder on the shaft. The after end of the after propeller sleeve carries a bronze bearing in the form of four separate bushings interposed between it and the forward propeller sleeve. On its extreme after end are mounted the after propeller and hub.

In torpedoes of new manufacture, a tubular grease reservoir (shell) (see Fig. 64D) is installed in the after propeller sleeve in order to improve the lubrication of the bearing surfaces in the tail. This method reverses the direction of the flow of the grease in relation to the center of rotation, and takes advantage of exhaust-gas heat to liquefy, and centrifugal action to force grease into the bearings.

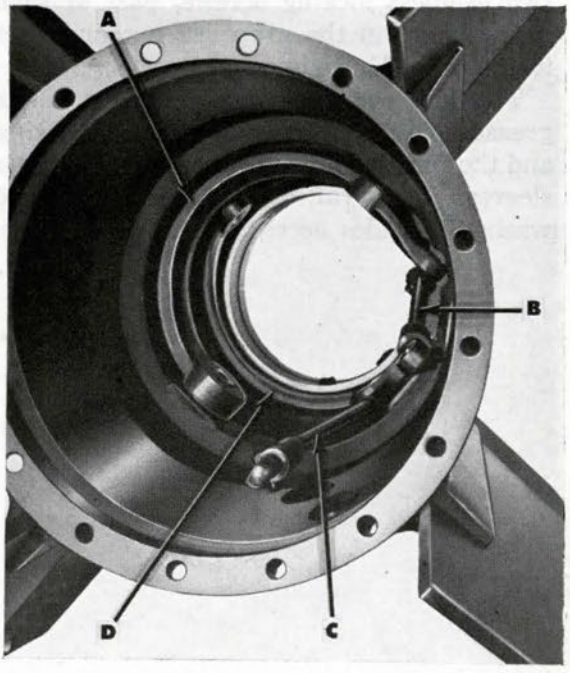

Figure 65—Interior of Tail Cone, Showing Rudder Yokes—(A) Depth-rudder yoke; (B) Depth-rudder adjusting rod; (C) Steering-rudder adjusting rod; (D) Steering-rudder yoke

A considerable space is provided between the sleeves within the tail cone; and, in addition, each sleeve has a series of large holes. The construction allows the exhaust gases to be expelled aft of the propellers, thereby preventing disturbance of the water forward of the propellers, and reducing surface indications of the torpedo wake.

Propellers and Hubs

The propellers are made of steel, each propeller having four blades. Each propeller has a steep tapered hole in the central body which fits a corresponding taper

on the propeller hub to which it is keyed. The propeller hub fits snugly over the after end of the propeller sleeve, and is keyed to the sleeve with one key. A large propeller nut forces the propeller on the tapered hub, and forces the hub into position on the sleeve. A slot in the forward propeller hub allows the hub to contract and grip the sleeve as the propeller nut is tightened. The propeller nut is prevented from turning by two headless locking screws, part of each screw being in the propeller nut and part in the propeller body.

The hub for the after propeller has a grease hole for lubricating the tail bearing and the four bushings between the propeller sleeves. Removal of a grease plug and washer provides access to the grease hole.

The grease cavity and grease plug referred to above are not used in torpedoes equipped with the new tail lubricating system described under propeller sleeves, above.

The after propeller hub is made integral with the sleeve, and the after propeller is secured to the after hub by a tight fit over the hub, and also by the after propeller lock nut. The after propeller is keyed to the hub, and the lock nut is held by two keep screws.

In torpedoes equipped with the new tail lubricating system, the hub for the after propeller has a grease hole for lubricating the tail bearing and the four bushings between the propeller sleeves. Removal of a grease plug and washer provides access to the grease hole.

Chapter 6

THE GYRO AND DEPTH MECHANISMS

General

The gyro and depth mechanisms (see Fig. 66) are installed for the purpose of keeping the torpedo on its predetermined course and at the desired depth.

The gyro and gyro mechanism, by operating the steering rudders, correct any deviation of the torpedo to port or starboard. The depth mechanism, by operating the depth rudders, maintains the torpedo at the desired depth during its run.

The two mechanisms are mounted on one base, as shown in the large illustration, Fig. 66, and also in Fig. 67, which shows the connections with the rudders.

The controlling feature of the gyro mechanism is the gyroscope, which is placed in the gyro pot, as a final step in getting a topedo ready for a run. Similarly, the controlling feature of the depth mechanism is the hydrostatic diaphragm and pendulum unit. The basic principle employed in the gyro mechanism is the gyroscope's resistance to any change in the alignment of its axis of rotation.

There are two controlling elements in the depth mechanism: (a) The hydrostatic diaphragm, which brings the torpedo to and maintains it at its set depth; and (b) the pendulum, which aids the diaphragm and keeps the torpedo at its proper running attitude.

The gyroscope is described fully in Ordnance pamphlet Number 627A. The purpose here is to give only a brief general description of the gyroscope, more especially as it relates to the gyro mechanism; hence reference should be made to OP 627A for complete details.

The gyroscope Mk 12-3 is used for the Torpedoes Mk 14 and Mk 23 Types.

The gyroscope is composed of a gyro wheel and supporting gimbals, which are so arranged that the axis of rotation of the gyro wheel may assume any direction. The gyro wheel receives its initial rotation by a gyro spinning and unlocking mechanism, which automatically is disengaged from the wheel once it has been given its initial spin; thereafter the velocity of the gyro wheel is maintained throughout the run of the torpedo by means of low-pressure air (approximately 125 p.s.i.).

The gyroscope is installed in a housing (gyro pot) to which are attached the mechanisms necessary for steering the torpedo.

These various mechanisms will be described in the following pages of this chapter.

Gyroscope

The gyroscope (see Figs. 68A to 68E) is composed of the following parts:

1. The wheel and spindle, a thick rimmed monel-metal wheel accurately balanced on its spindle or axis, and rotating in the central plane of the gyroscope. This wheel is shown, with the inner gimbal ring, in Fig. 69. On the rim of the wheel are saw-tooth buckets on which air impinges, maintaining a constant rate of spin. Spur gears are machined on each enlarged section of the spindle. One of these meshes with a similar spur gear of the gyro spinning and unlocking mechanism while the gyro wheel is be-

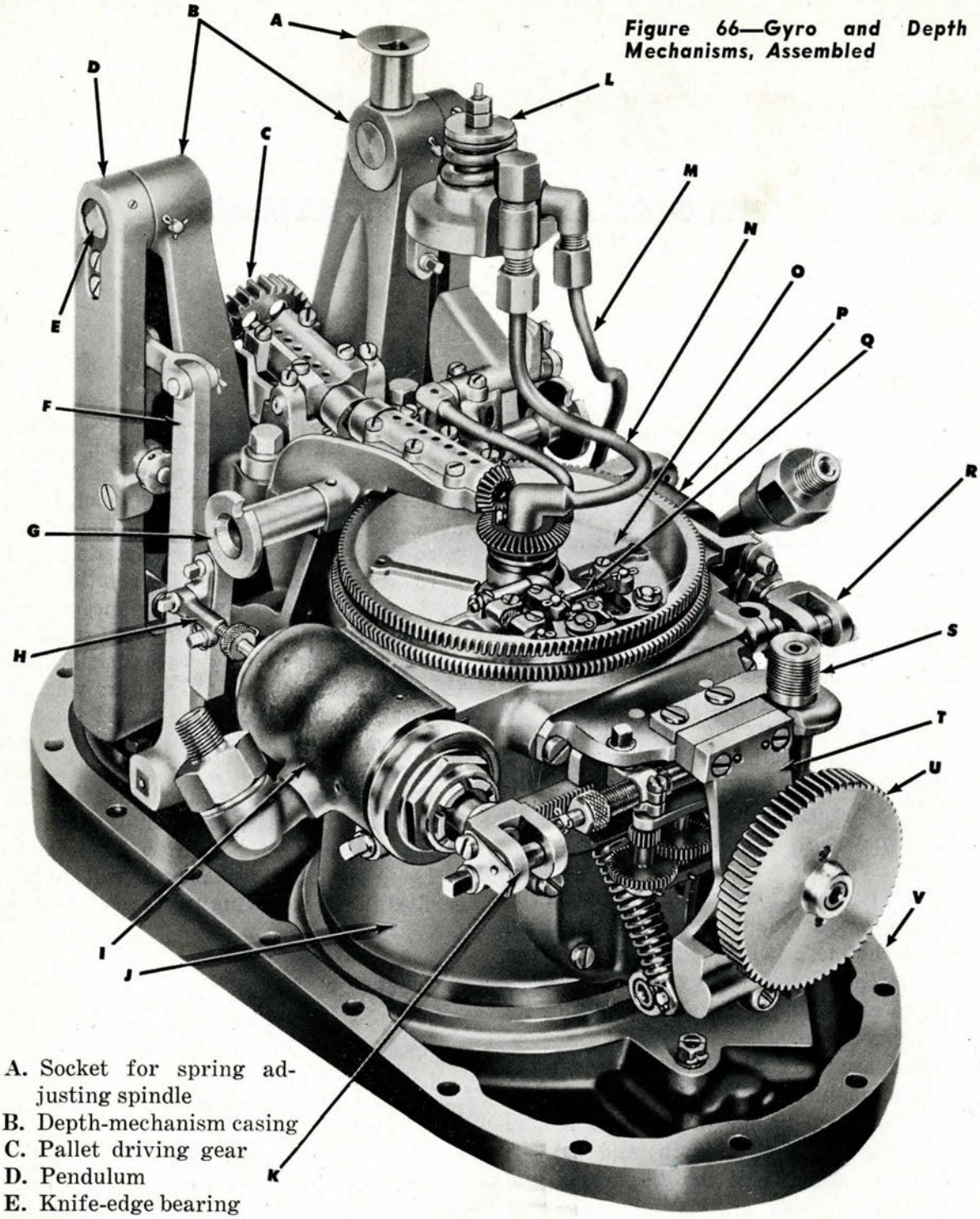

Figure 66—Gyro and Depth Mechanisms, Assembled

A. Socket for spring adjusting spindle
B. Depth-mechanism casing
C. Pallet driving gear
D. Pendulum
E. Knife-edge bearing
F. Pendulum lever
G. Worm-shaft sockets (for angle setting)
H. Valve connection
I. Depth engine
J. Gyro pot
K. Piston fork
L. Gyro reducer
M. Air from strainer holder
N. Air for sustaining gyro spin
O. Top plate
P. Steering engine
Q. Pallet mechanism
R. Piston fork
S. Gyro spin nipple
T. Gyro spinning and unlocking mechanism
U. Spinning turbine
V. Base

Figure 67—Gyro and Depth Mechanisms, Showing Linkage to Depth and Steering Rudders

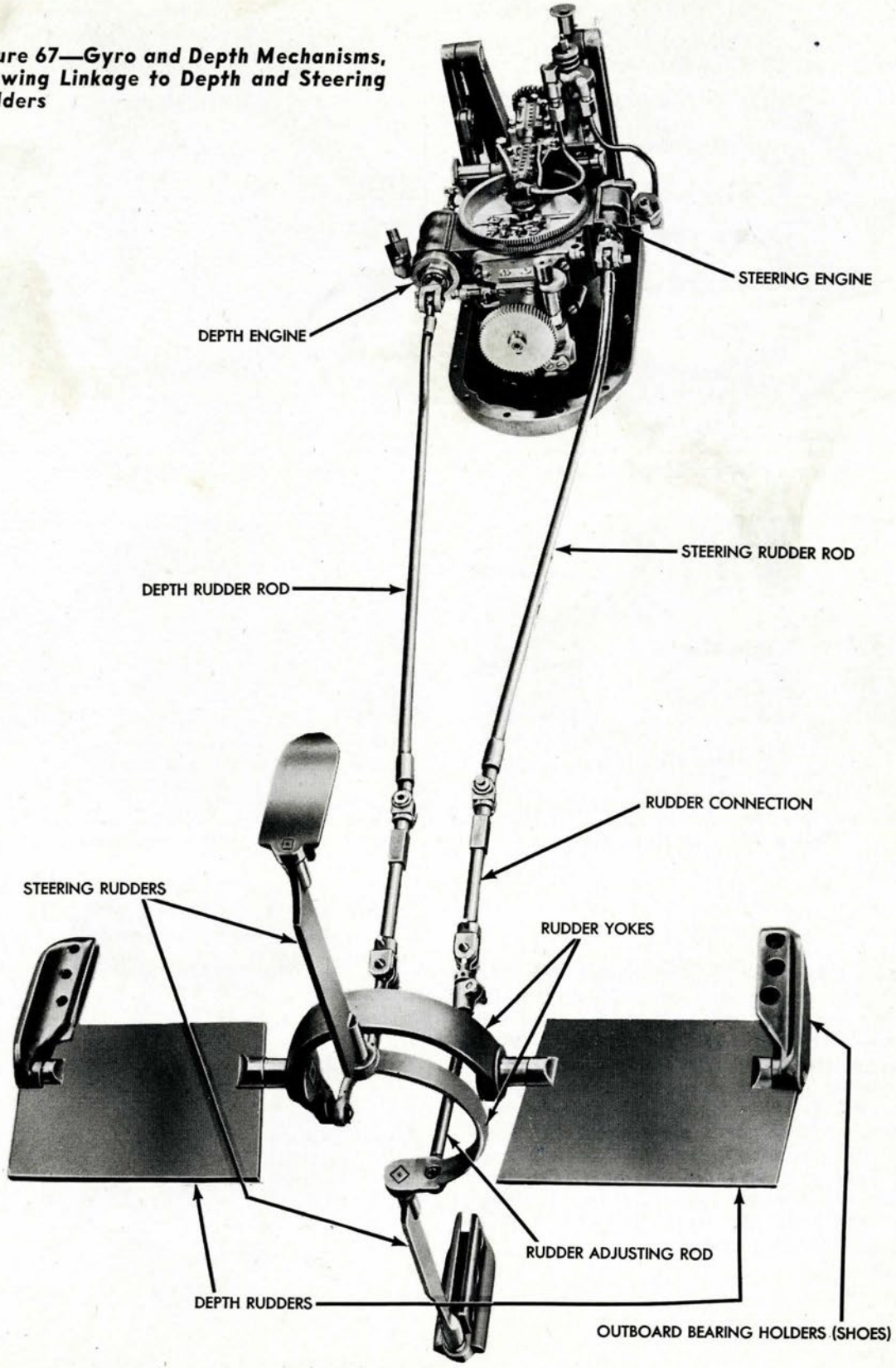

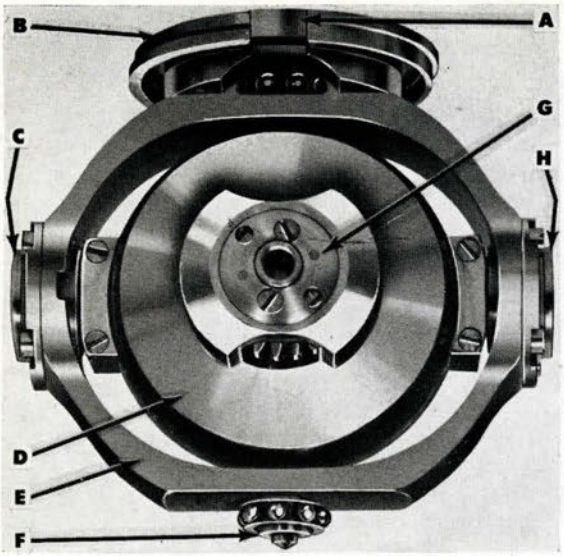

Figure 68A—Locking-End View

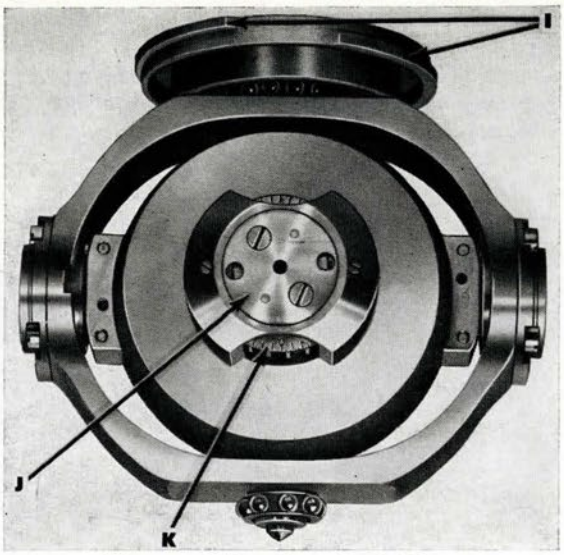

Figure 68B—Free-End View

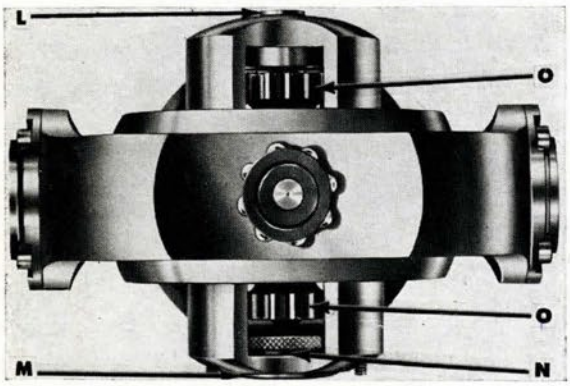

Figure 68C—Bottom View

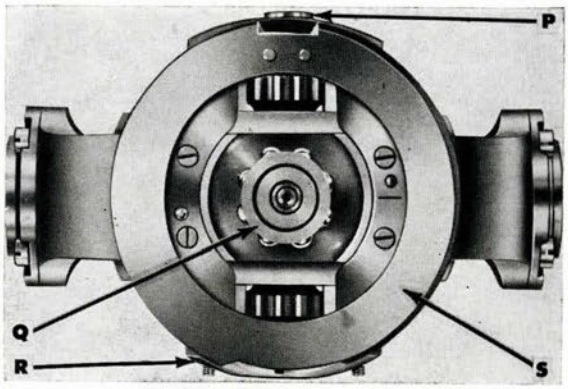

Figure 68D—Top View

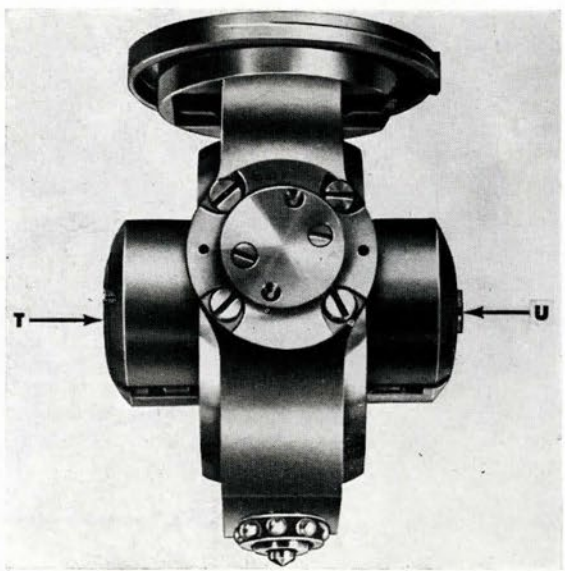

Figure 68E—Port-Side View

Figures 68A to 68E—Gyroscope Mk 12-3 (including cam plate) assembled, showing locking end, free end, bottom, top, and side views—(A) Cam; (B) Cam plate; (C) Side-bearing assembly; (D) Inner gimbal ring; (E) Outer gimbal ring; (F) Bottom bearing; (G) Locking end; (H) Side-bearing assembly; (I) Concentric ridges; (J) Free end; (K) Balance nut; (L) Locking end; (M) Free end; (N) Balance nut; (O) Spur gears; (P) Locking end; (Q) Top bearing; (R) Free end; (S) Cam plate; (T) Free end; (U) Locking end

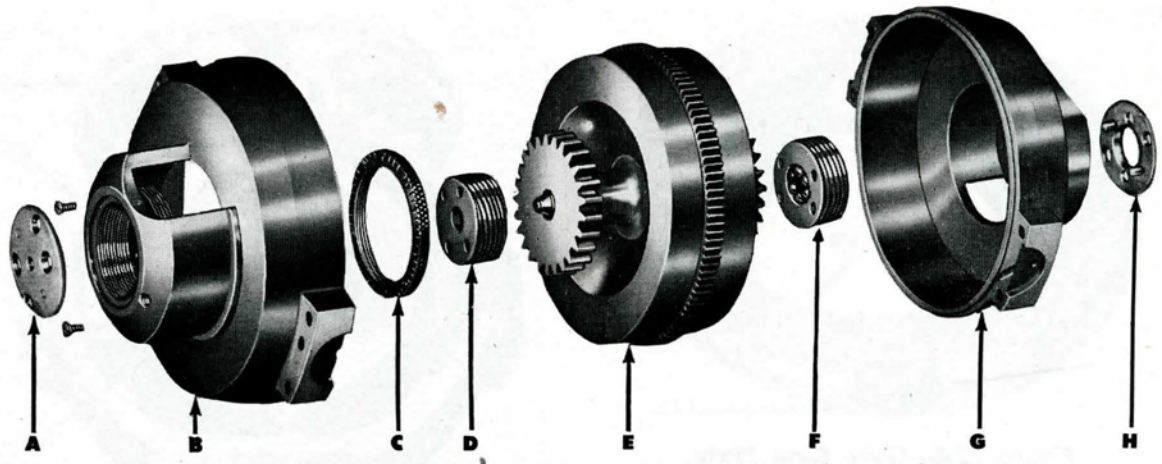

Figure 69—Gyro Wheel and Inner Gimbal Ring disassembled

A. Locking disc (free end) with screws for attaching
B. Inner gimbal (after half)
C. Balance nut
D. Wheel bearing "B"
E. Gyro wheel, showing pivot, spur gear, and saw-tooth buckets on wheel rim
F. Wheel bearing "A". Side opposite that shown is machined with socket to receive centering pin.
G. Inner gimbal (forward half). Note channels grooved into brackets at sides of ring; when the two rings meet, these channels form ducts to convey air to buckets on wheel rim.
H. Locking disc. Note locating dowels.



Figure 70—Outer Gimbal Ring, showing partial cut-away of air passages

ing given its initial spin; the other gear is provided for balance. The gyro wheel is housed within a split casing called the **inner gimbal ring** (see Fig. 69) which, in turn, is pivoted within the **outer gimbal ring** (see Fig. 70). The gyro wheel spins on its own axis and holds to its original alignment, while the torpedo may swing and even revolve either horizontally or vertically without deflecting the axis of the gyro wheel from its original alignment.

2. The inner gimbal ring, shown in Fig. 69, is machined in the form of a hood, being thus designed to prevent air currents thrown off by the wheel from striking the gimbal rings and thereby setting up deflecting forces on the sensitive parts of the unit. The inner gimbal ring may be turned 360 de-

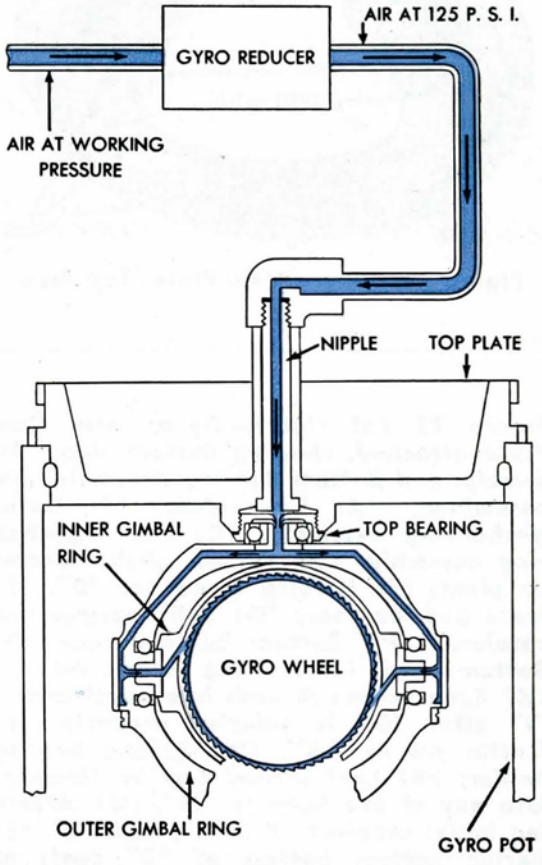

Figure 71—Diagrammatic Drawing showing Path of Air which Sustains Gyro Wheel at a Constant Speed

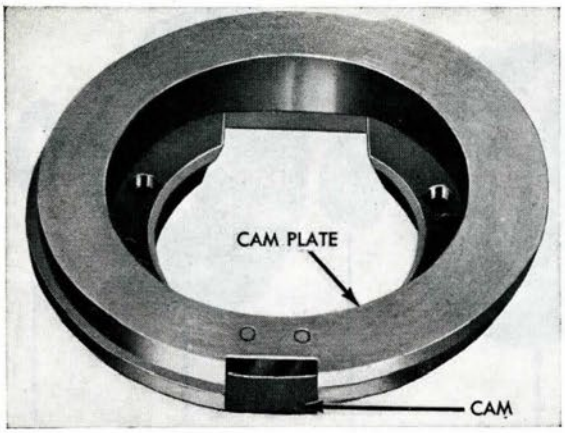

Figure 72A—Gyro Cam Plate, Bottom View

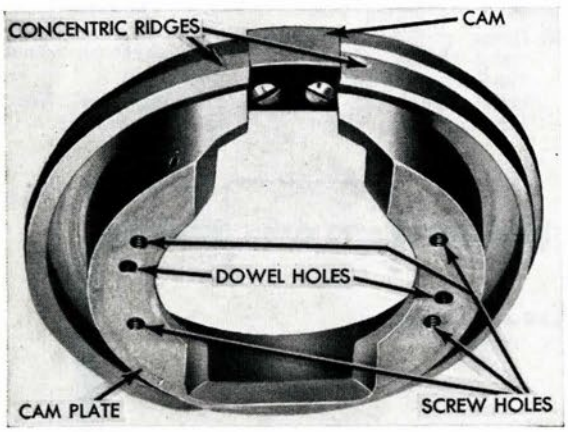

Figure 72B—Gyro Cam Plate, Top View

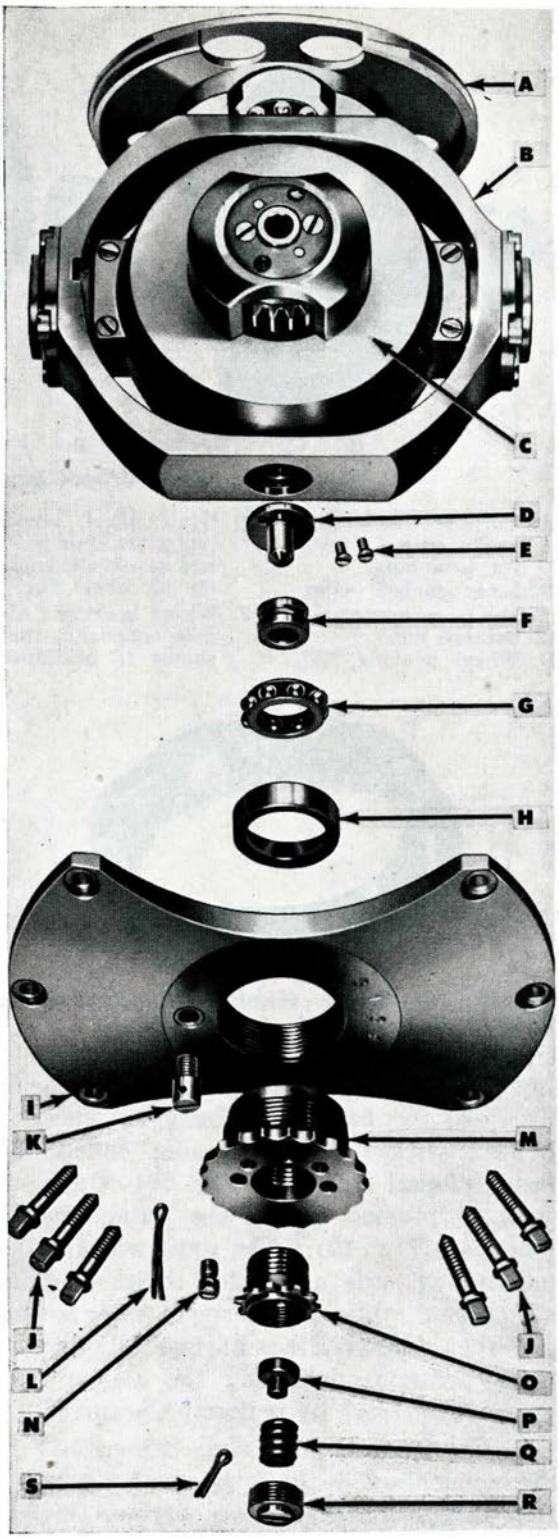

Figure 73 (at right)—Gyro, with Cam Plate attached, showing Bottom Head Assembly, and Bottom Bearing Assembly, disassembled. (A) Cam plate; (B) Outer gimbal-ring assembly; (C) Inner gimbal-ring assembly; (D) Bottom gimbal center or pivot; (E) Holding screw for "D"; (F) Inner bearing race; (G) Ball bearings and retainer; (H) Bottom bearing race; (I) Bottom head; (J) Holding screws for "I"; (K) Keep screw; threads into small hole in "I" after "M" is adjusted properly; (L) Cotter pin for "K"; (M) Bottom bearing holder; (N) Lock screw; may be threaded into any of five holes in "M"; (O) Adjusting body; receives "P", "Q", and "R"; (P) Spring button; bottom of "D" seats on upper face of "P"; (Q) Spring; (R) Plug; provides seat for "Q"; (S) Cotter pin for "N"

grees in its bearing in the outer gimbal ring without interference.

3. The outer gimbal ring, which supports the inner gimbal ring, is shown in Fig. 70. In other words, the outer gimbal ring encircles and supports the gyro and inner gimbal-ring assembly. The upper face of the outer gimbal ring is machined for attaching the cam plate. Holes are drilled through the upper section of the outer gimbal ring for the passage of air to the side bearing sleeves, and through the inner gimbal centers to sustain the constant spin of the gyro as shown in Fig. 71.

Cam Plate

The cam plate (see Figs. 72A and 72B), through which the gyro controls the torpedo's mechanism for holding the torpedo to its course, is secured to the top of the outer gimbal ring, as shown in Fig. 68, its location being determined by dowels projecting from the top of the ring (see Fig. 70). The cam plate has a central opening to permit engagement of the top outer gimbal-ring bearing with the bearing race in the top of the gyro pot.

A cam is secured to the outer circumference of the cam plate in line with the axis of the gyro wheel. This cam serves to throw the pallet blade to right or left as the torpedo changes its direction relative to the axis of the gyro, giving right and left rudder respectively. The rim of the cam plate is machined with concentric ridges and grooves, so that the cam pawls will be thrown in the direction necessary to restore the torpedo to the course, at which time the cam pawls will straddle the cam.

The Gyroscope Mk 12-3 is shown in Fig. 68 (locking-end view) with the cam plate in place, this being the after side of the gyro and cam plate, and showing the socket in the gyro wheel bearing into which the head of the centering pin inserts when the spinning and unlocking mechanism is in locked position. Fig. 73 also shows the bottom center bearing assembly, disassembled, together with the bottom head and related parts, the bottom head being assembled on the gyro pot after the gyro is installed in the pot.

Fig. 74 shows the side bearing assembly and inner gimbal center bearing assembly, disassembled.

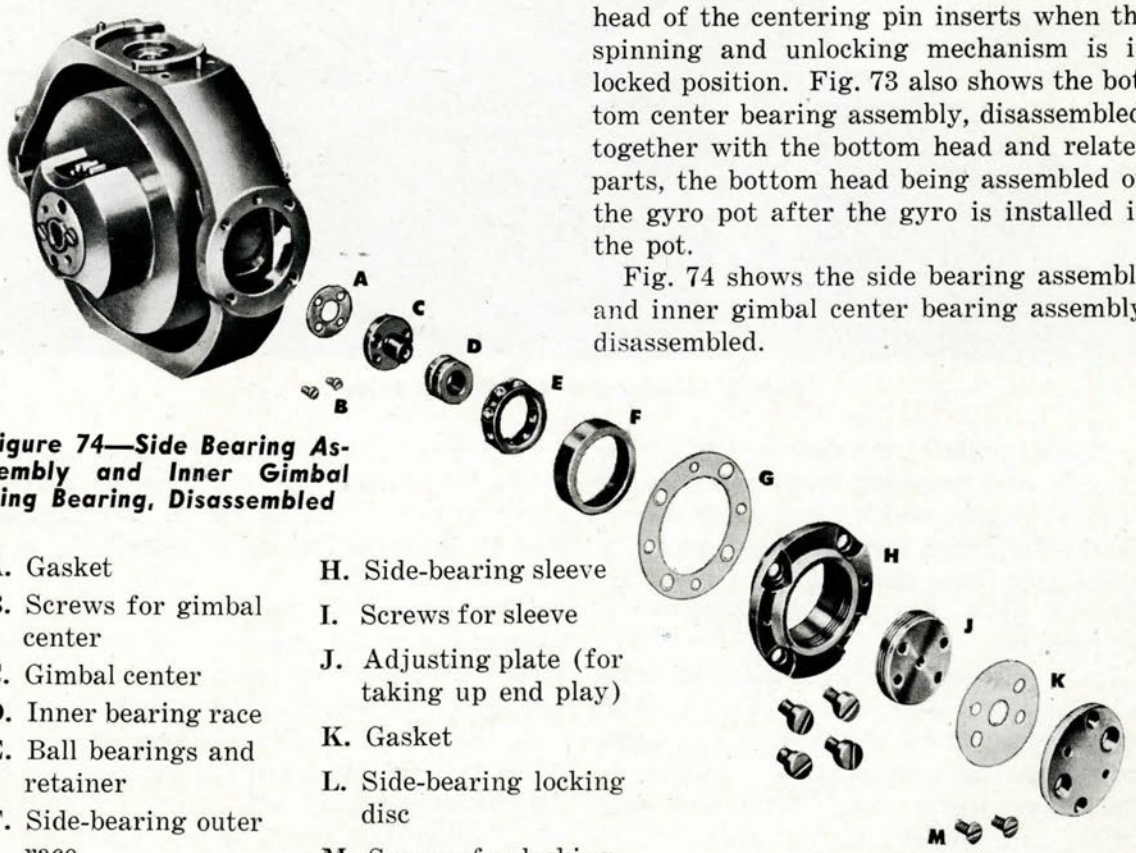

Figure 74—Side Bearing Assembly and Inner Gimbal Ring Bearing, Disassembled

A. Gasket
B. Screws for gimbal center
C. Gimbal center
D. Inner bearing race
E. Ball bearings and retainer
F. Side-bearing outer race
G. Gasket
H. Side-bearing sleeve
I. Screws for sleeve
J. Adjusting plate (for taking up end play)
K. Gasket
L. Side-bearing locking disc
M. Screws for locking disc

Gyro Pot

The gyro pot (Fig. 75) is a cylindrical bronze drum which houses the complete gyroscope. It carries the spinning and unlocking mechanism assembly on its after side. On the upper port and starboard sides are bosses for mounting the depth and steering engine.

The spinning and unlocking mechanism gives the gyro its initial spin; the pallet mechanism takes "steering orders" from the gyro and transmits those orders to the steering engine, which carries out the orders by regulating the steering rudders.

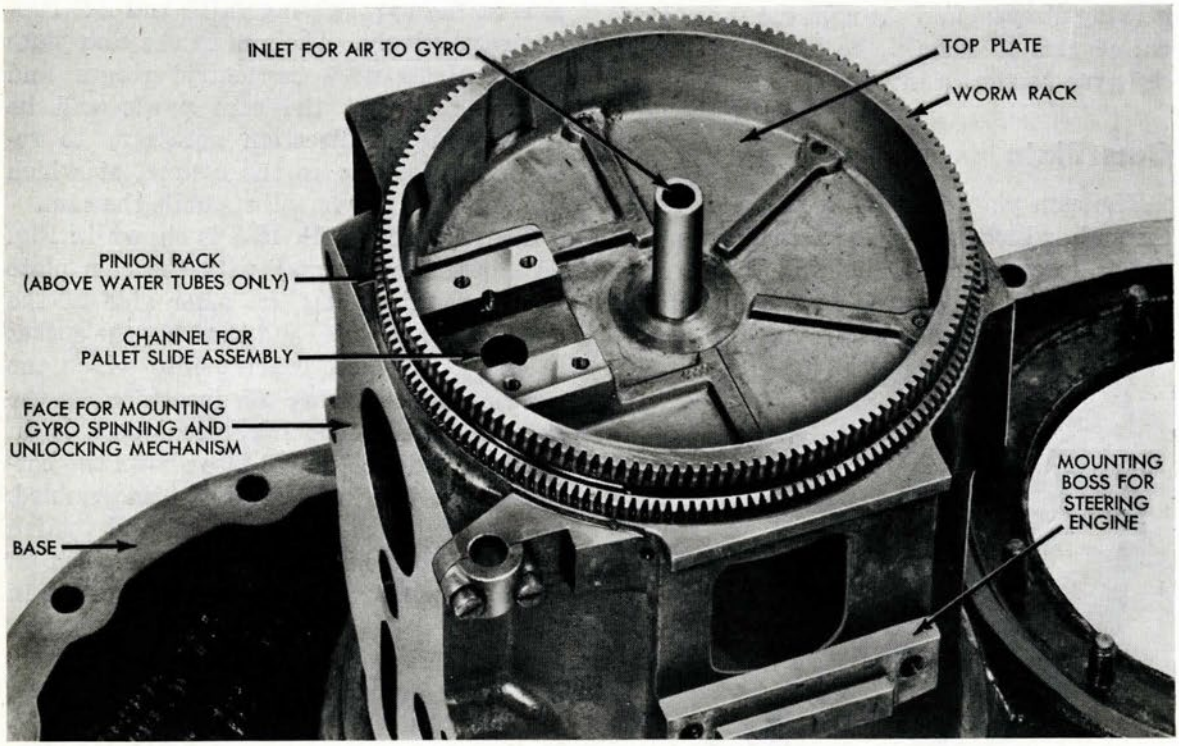

Figure 75—Gyro Pot with Top Plate

The gyro clamp plate and cover (see Figs. 76A and 76B) close the lower opening of the gyro pot.

The clamp plate has a flanged seat on its outer circumference which fits a similar seat in the bottom of the gyro pot, being made water-tight by means of a gasket. In the center of the clamp plate is a hole, drilled and tapped, for the screw which holds the clamping plug.

The clamp plate cover has a four-section interrupted ridge on its circumference which fits over a corresponding interrupted ridge on the gyro pot. The clamp plate is rotated until the ridges are in line, after which the cover may be clamped against its seat by tightening the plug.

The top of the pot is machined with a tight joint permitting a turning of the top plate for angle settings. The center of the top plate is built up to form a recess for the top bearing of the gyro outer gimbal ring. A passage is drilled down through this section, providing for the introduction of air into this bearing to sustain the spin of the gyro wheel.

Two segments are extended from the lower end of the inner wall of the gyro pot for the support of the bottom head. The complete gyroscope is supported through its vertical axis between a bearing in this bottom head and a bearing mounted in the gyro top plate.

The top plate (see Fig. 75), which closes the top of the gyro pot, and on which the pallet mechanism is assembled, is held

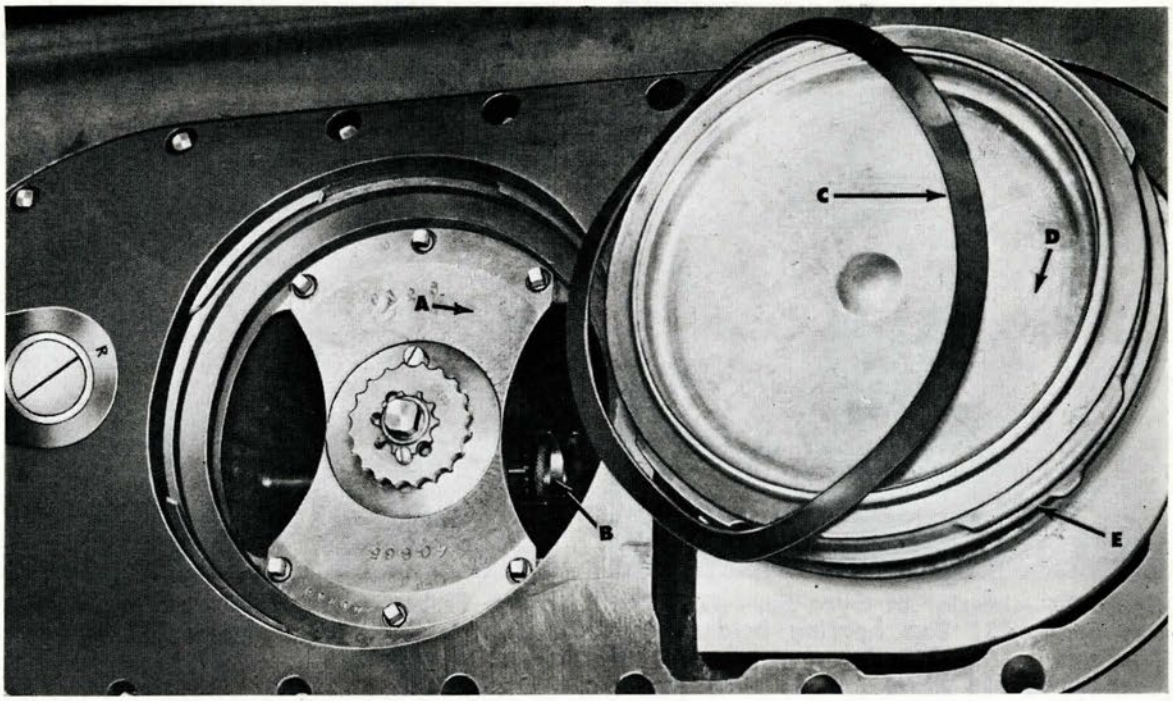

Figure 76A—Gyro Clamp Plate and Cover, Removed—(A) Gyro bottom head; (B) Gyro; (C) Gasket; (D) Clamp plate; (E) Clamp plate cover

against a lapped surface on the top of the gyro pot with retainer plates (see Fig. 77). This top plate can be moved through 160 degrees left or right to permit setting of the gyro pot for angle shots. The plate is machined with a double row of teeth on its outer periphery, the upper being the worm rack for side setting, and the lower being a pinion rack for setting by means of the bottom setting socket (for above-water tubes only). The side setting socket (in combination with the side gears) permits setting for angle shots from the exterior of the torpedo in a tube. This complete mechanism, called the angle-fire setting device, will be described later in this chapter.

Figs. 78A and 78B show the gyro and related mechanisms in place, Fig. 78A being a side view, and Fig. 78B a view from aft. The pot has been cut away in these two views to show how the various units relate to each other.

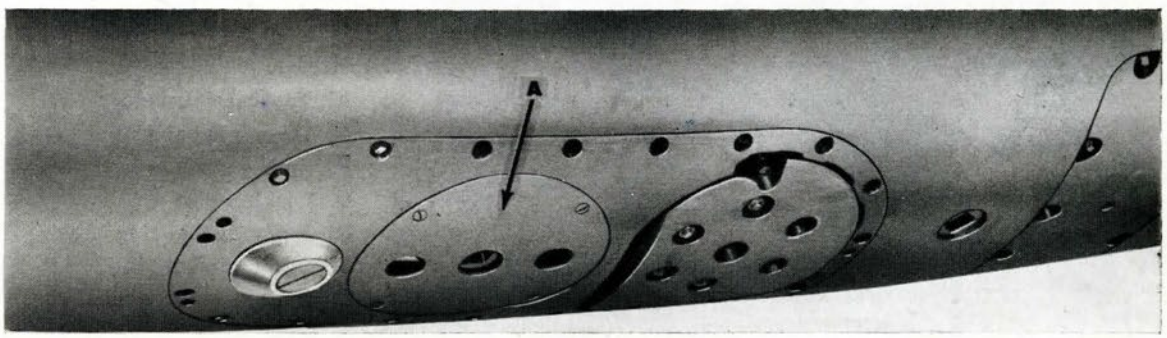

Figure 76B—Gyro Clamp Plate and Cover (A) in place

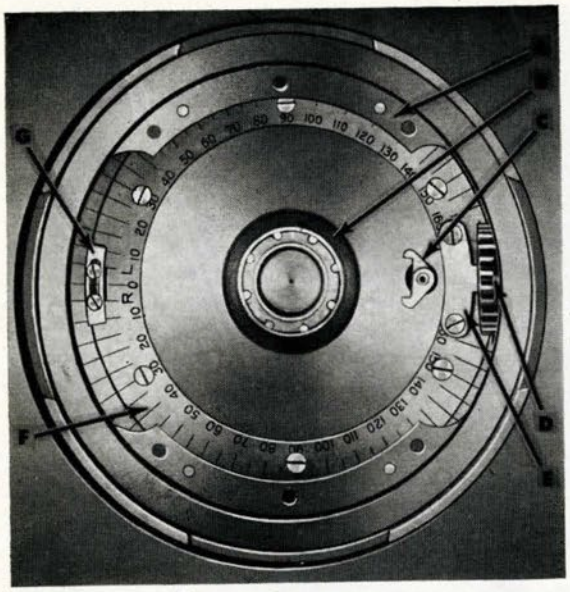

Figure 77—Interior of Gyro Pot—(A) Bottom head; (B) Top bearing holder; (C) Cam pawls; (D) Spinning gear of spinning mechanism; (E) Stop; (F) Retainer plate; (G) Marker

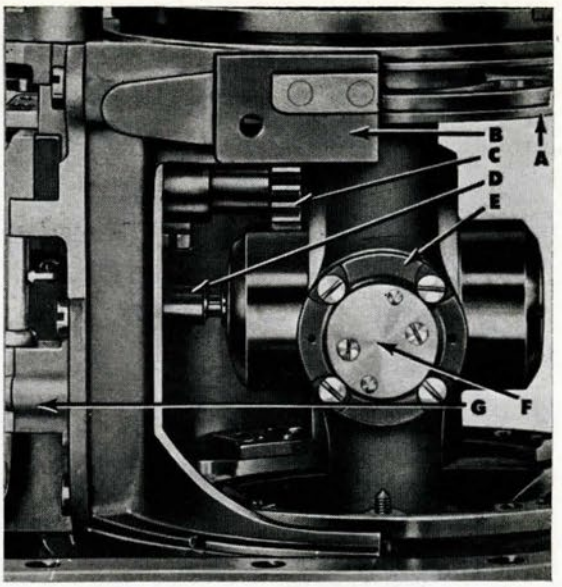

Figure 78A—Gyro and Related Mechanisms in Place, side view. Figure 78B (below) shows view from aft

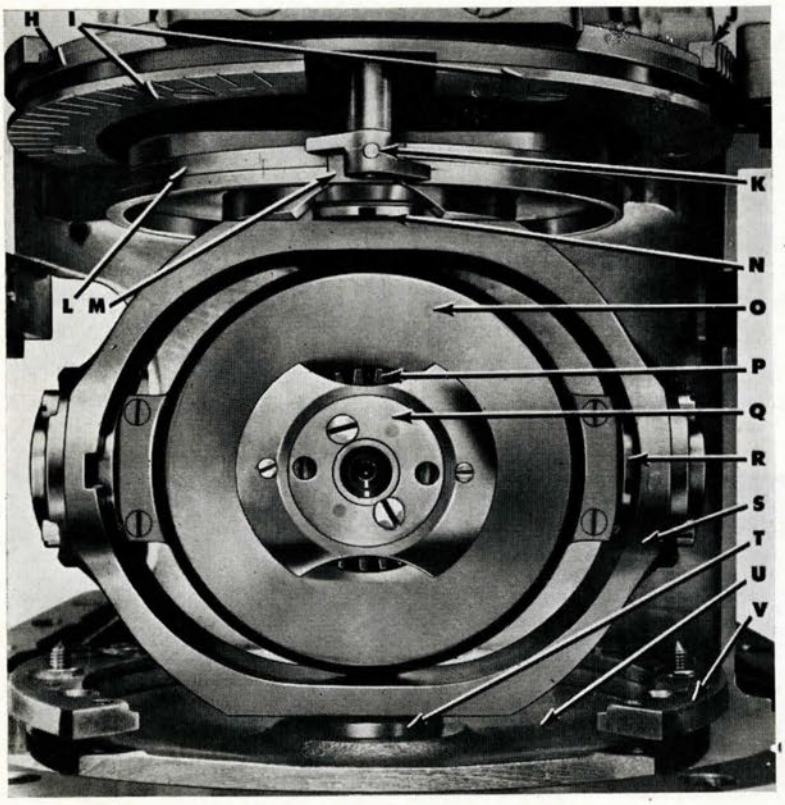

Figure 78B—Gyro and Related Mechanisms in Place, viewed from aft

A. Cam plate from port side, showing port concentric ridge
B. Boss for depth engine
C. Spinning gear; meshed with spur gear at locking end of gyro
D. Centering pin; is engaged in socket on outer side of gyro wheel bearing "A"
E. Inner gimbal ring sleeve
F. Locking disc
G. Gyro spinning and unlocking mechanism frame
H. Gyro top plate
I. Retainer plates
J. Top plate teeth; mesh with worm
K. Cam pawls
L. Cam plate
M. Cam
N. Top bearing holder
O. Inner gimbal ring
P. Spur gear
Q. Locking disc
R. Inner gimbal-ring bearing
S. Outer gimbal ring
T. Bottom outer gimbal-ring bearing
U. Bottom head
V. Renewal plate

Gyro Spinning and Unlocking Mechanism

A gyroscope accomplishes its purpose only when it is spinning at a very high rate of speed. It is the function of the gyro spinning and unlocking mechanism to give the gyro the initial spin (approximately 20,000 revolutions per minute) while holding the gyro firmly in position. Having supplied this initial spin, the mechanism must then be released from the gyro so that the latter will spin freely, and it must accomplish this without disturbing the gyro.

The gyro spinning and unlocking mechanism is assembled in a spinning-gear frame (see Figs. 79A and 79B), which is attached to the after side of the gyro pot, and in a front plate assembly attached to the spinning-gear frame. The front plate assembly has radial holes which direct the high-pressure air upon the teeth of the spinning turbine. Fig. 66 is a view of the spinning and unlocking mechanism in place on the gyro pot.

The essential features of the spinning and unlocking mechanism are: (a) the spinning turbine and impulse mechanism, Figs. 80A, 80B, and 80C; (b) the centering feature, Fig. 81; (c) the locking and unlocking gear train, Figs. 82A and 82B; and (d) the spinning gear duration-adjustment feature, Fig. 83; also see Fig. 82B.

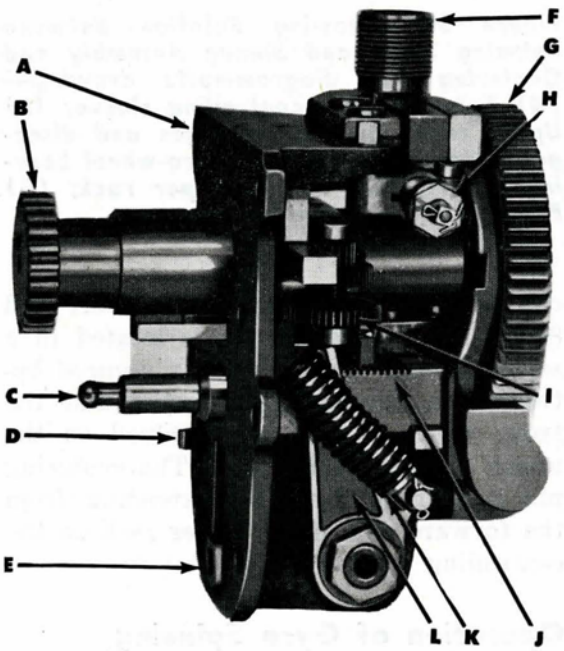

Figure 79A—Gyro Spinning and Unlocking Mechanism, Locked, View from Port Side. The mechanism mounted on the gyro is shown in Fig. 66

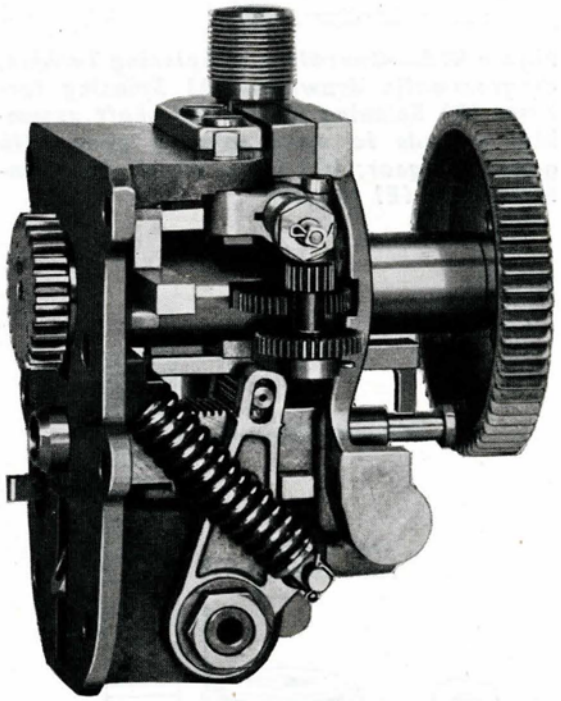

Figure 79B—Gyro Spinning and Unlocking Mechanism, removed from gyro pot, as it appears after it has supplied the gyro's initial spin and is disengaged from it. View from port side

(A) Frame; (B) Spinning gear; (C) Centering pin; (D) Hand trip; (E) Locking lever; (F) Gyro spin nipple; (G) Spinning turbine; (H) Duration-adjustment feature; (I) Reduction-gear train; (J) Lower rack; (K) Spring; (L) Spring bell crank

Centering Features

To hold the gyro rigid with the spur gears of the spinning shaft and gyro in proper mesh during the initial spin, the gyro wheel is held in position by a centering pin, the ball end of which engages in the hollow center of the ball-bearing

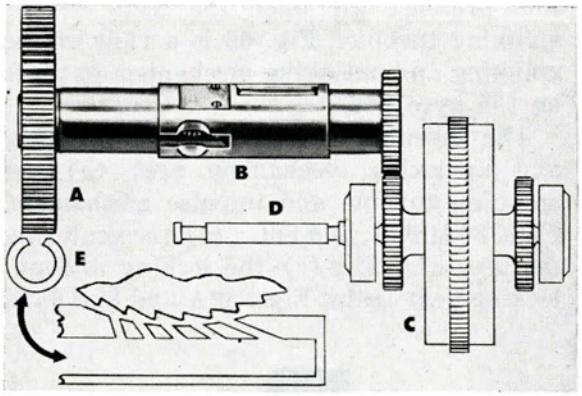

Figure 80A—Operation of Spinning Turbine, diagrammatic drawing—(A) Spinning turbine; (B) Spinning sleeve and shaft assembly; extends to mesh spinning gear with gyro spur gear; (C) Gyro wheel; (D) Centering pin; (E) Nozzles

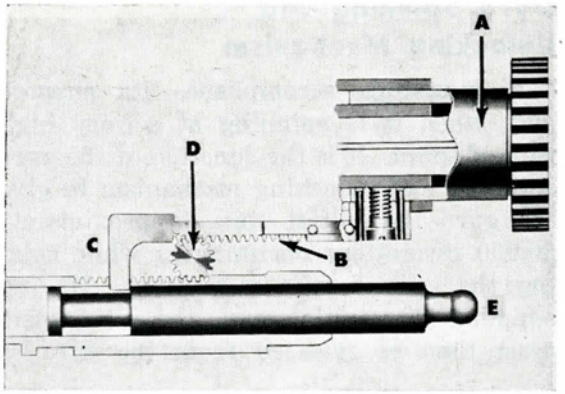

Figure 80B—Showing Relation Between Spinning Shaft and Sleeve Assembly and Centering Pin, diagrammatic drawing—(A) Spinning-shaft controlling sleeve; (B) Upper rack; toe "C" engages and disengages centering pin with gyro-wheel bearing socket; (C) Toe of upper rack; (D) Pinion; (E) Centering pin

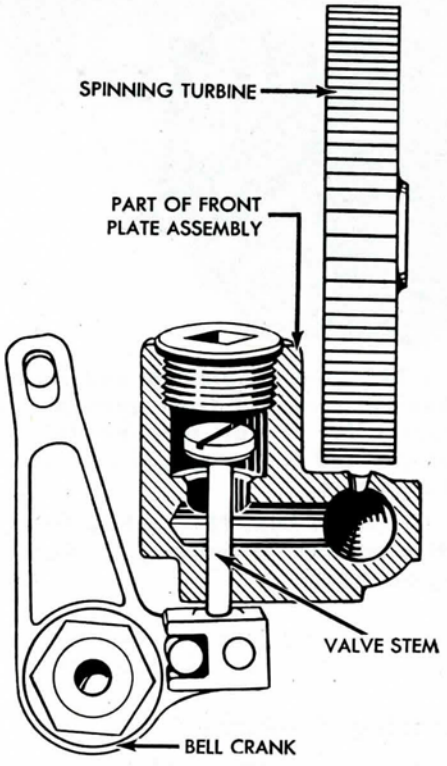

Figure 80C—Impulse valve—Locking of the spinning gear in mesh with the gyro automatically opens the impulse valve, through which air is passed to the nozzles for the spinning turbine. Valve closes when the mechanism unlocks.

cup for the wheel. (See Figs. 78A and 80A.) This centering pin is located in a separate steel housing rigidly secured between the spinning-gear frame and the front plate. A rack is machined on the upper side of the housing. The centering pin is operated by a toe extending from the forward end of the upper rack on the controlling sleeve.

Operation of Gyro Spinning and Unlocking Mechanism

The operation of the complete spinning and unlocking mechanism is as follows: With the locking of the mechanism, the spinning-shaft sleeve is moved in until the toe of the unlocking bar catches and holds it in the spinning position. The turbine wheel is then lined up over the nozzles; the centering pin is engaged in the forward ball cup of the gyro wheel; the spinning gear engages the spur gear on the gyro wheel spindle; the pinion on the locking and unlocking gear train is engaged with the teeth in the unlocking rack; the impulse valve is held clear of its seat; and the unlocking spring is placed under heavy compression by the spring bell crank. The gyro is then ready for a spin.

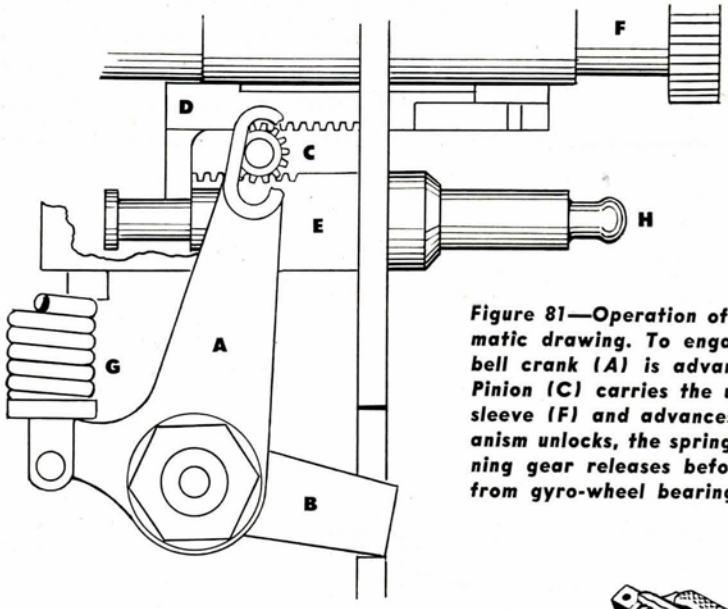

A. Spring bell crank
B. Locking lever
C. Pinion
D. Upper rack
E. Lower rack
F. Controlling sleeve
G. Spring
H. Centering pin

Figure 81—Operation of Locking and Centering Feature, diagrammatic drawing. To engage spinning gear and centering pin, the bell crank (A) is advanced by means of the locking lever (B). Pinion (C) carries the upper rack with it, which in turn extends sleeve (F) and advances the centering pin (H). When the mechanism unlocks, the spring (G) reverses travel of upper rack; spinning gear releases before toe or rack disengages centering pin from gyro-wheel bearing.

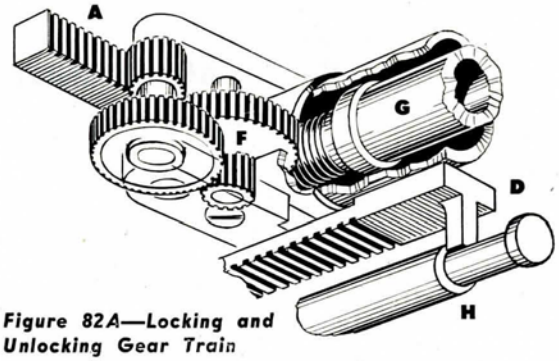

Figure 82A—Locking and Unlocking Gear Train

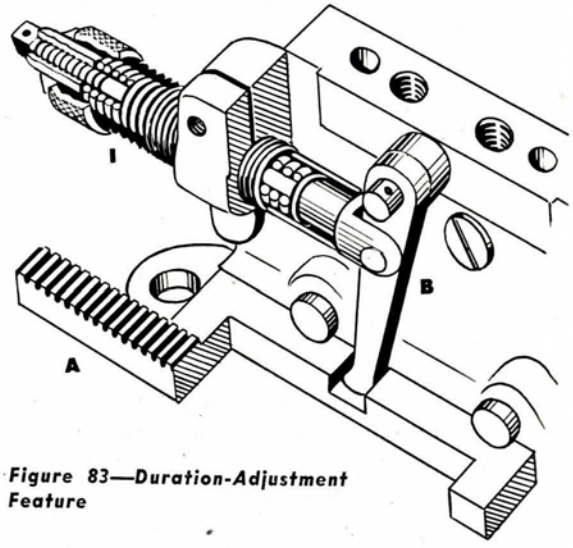

Figure 83—Duration-Adjustment Feature

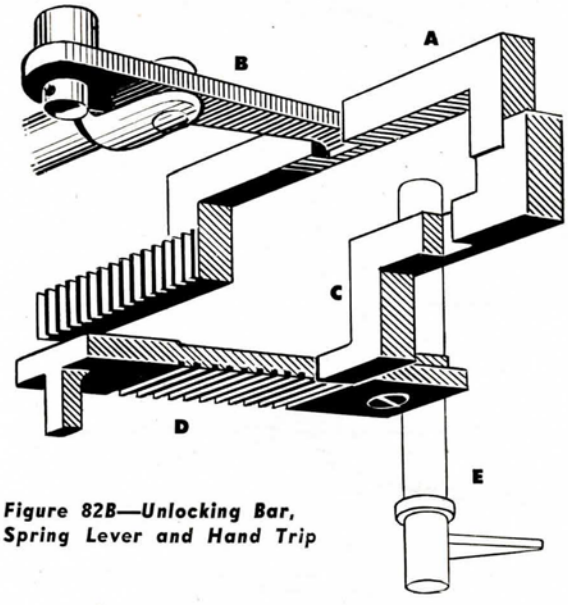

Figure 82B—Unlocking Bar, Spring Lever and Hand Trip

Figures 82A, 82B, and 83—Diagrammatic drawings illustrating operation of spinning and unlocking mechanism. (A) Unlocking rack, releases spinning shaft when thrust against "C"; (B) Spring lever, returns "A" to left after unlocking action; (C) Unlocking bar, releases "D" when moved to right by "A"; (D) Upper rack; (E) Hand trip, cam at top locks "C" against "D" and releases it when lever at bottom is moved by hand; (F) Reduction gear train, advances "A" to right as spinning shaft "G" revolves, until "C" is contacted; unlocking of mechanism then releases "A" for return; spinning shaft and sleeve with rack "D" snap to unlocked position, "D" carrying "H" with it; (G) Spinning shaft; (H) Centering pin; (I) Duration-of-spin adjustment; through lever "B", positions rack "A" so more or less teeth are engaged by pinion of gear train "F", controlling time required to advance rack to unlocking point.

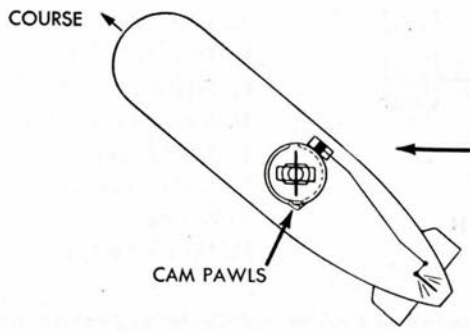

Torpedo running on desired course. Cam pawls now in line with gyro axis. Torpedo straightened out on course and steering rudders oscillating in normal manner. Gyro axis still parallel to original position.

Torpedo running. Steering rudders turning torpedo to bring cam pawls into line with gyro axis. Gyro axis still parallel to original position.

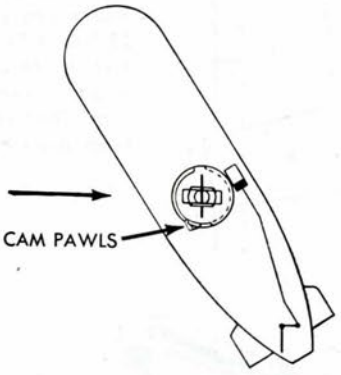

ANGLE SHOT

Torpedo ready to be fired on angle shot. Gyro-mechanism top plate rotated to desired angle, thus setting cam pawls off center of gyro cam plate by same angle.

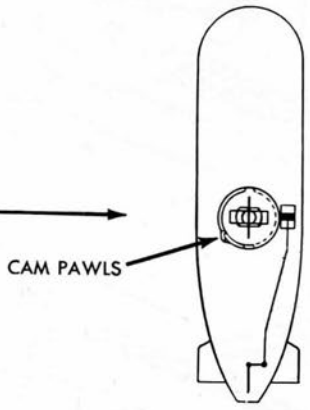

Torpedo ready to be fired on straight shot. No angle set. Cam pawls in line with gyro axis.

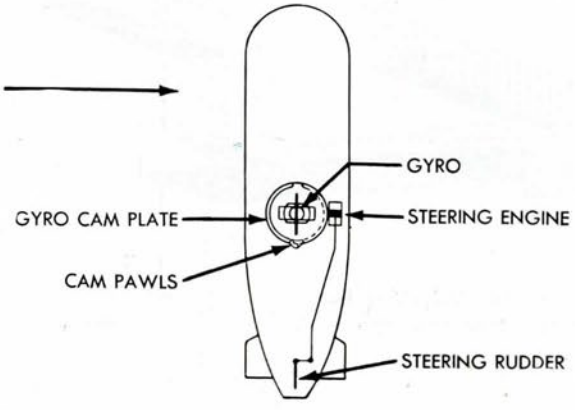

Figure 84—Angle Shot, Functional Diagram, showing action of the gyro, pallet, and rudder (read from bottom up).

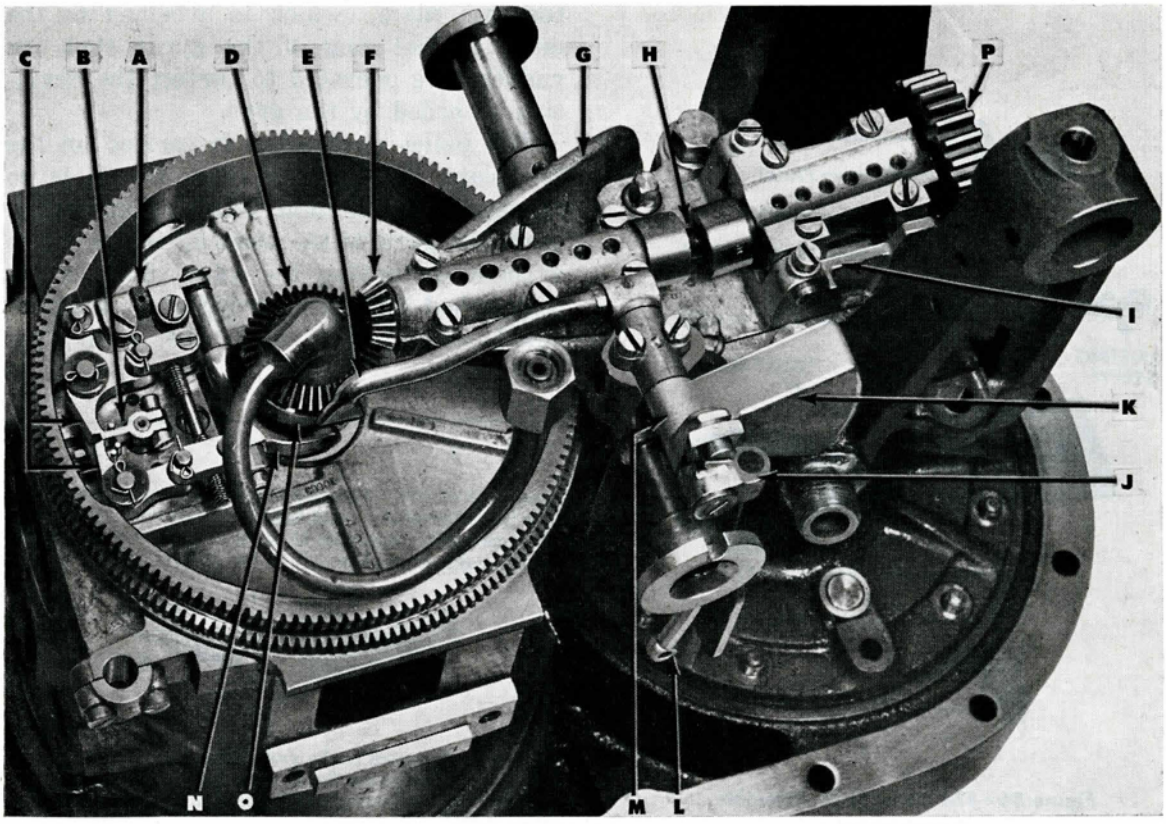

Figure 85—Pallet Mechanism with Linkage to Steering Engine—(A) Adjustable connection; (B) Pallet; (C) Pallet pawls; (D) Cam bevel gear; (E) Valve rock-shaft arm; (F) Driving spindle and bevel pinion; (G) Bracket for driving spindle; (H) Driving connection; (I) Bracket for pallet driving gear; (J) Adjusting head; (K) Counter weight on rock shaft; (L) Valve connection arm; (M) Valve rock shaft; (N) Bell crank; (O) Connection spool; (P) Pallet driving gear

Upon launching of the torpedo, when the starting valve lifts, a blast of air at flask pressure is admitted through the impulse valve and the turbine nozzles of the gyro spinning and unlocking mechanism, spinning the turbine wheel. While the turbine wheel is being spun, the unlocking rack, actuated by the unlocking gear train, travels toward the unlocking bar until, at the end of its travel, the toe of the unlocking rack pushes the unlocking bar clear of the spinning-shaft sleeve. The pressure of the unlocking spring against the spring bell crank, augmented by the force exerted by the impulse-valve stem against the toe on the valve bell crank, causes the instant withdrawal of the spinning-shaft sleeve. This disengages the spur gears and the unlocking-gear pinion, closing the impulse valve, and finally withdrawing the centering pin. The spinning gyro is now free, having accomplished the purpose of the spinning and unlocking mechanism for the run.

Pallet Mechanism

In Fig. 84 a diagrammatic drawing is shown illustrating the action of the gyro, pallet, and rudders in guiding the torpedo on its course.

The course of the torpedo is controlled by the steering rudders, which are operated by the steering engine. The **directive force** is relayed from the gyro wheel to the steering-engine valve by means of the **pallet mechanism.** This pallet mechanism is so arranged in coordination with the cam on

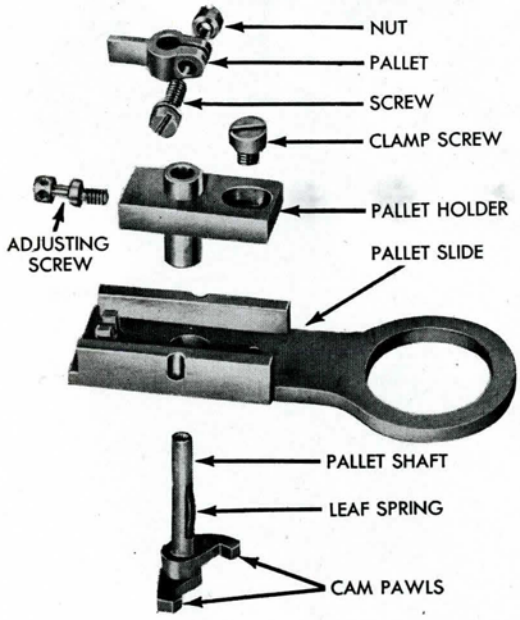

Figure 86 —The Pallet Slide Assembly, disassembled

the cam plate (which is attached to the outer gimbal ring of the gyro) that the rudders are operated to correct the deviation recorded by the gyro.

The pallet mechanism is carried on the top plate, as shown in Fig. 85. It is so arranged that motion will be transmitted from the gyro to the steering-engine valve without disturbing the gyro. This is accomplished by intermittent light contact of small cam pawls with the cam (see Fig. 78B).

Figures 87B to 87K —The drawings and explanatory text given below present a progressive explanation of how the pallet mechanism operates to control the operation of the steering engine, and through it the steering rudders.

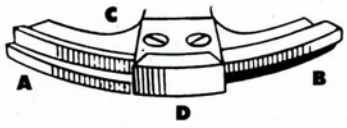

Figure 87B —Fastened to the gyro, cam plate "C" holds cam "D" with its center on the firing course. For later reference, "A" is port concentric ridge, "B" is starboard concentric ridge.

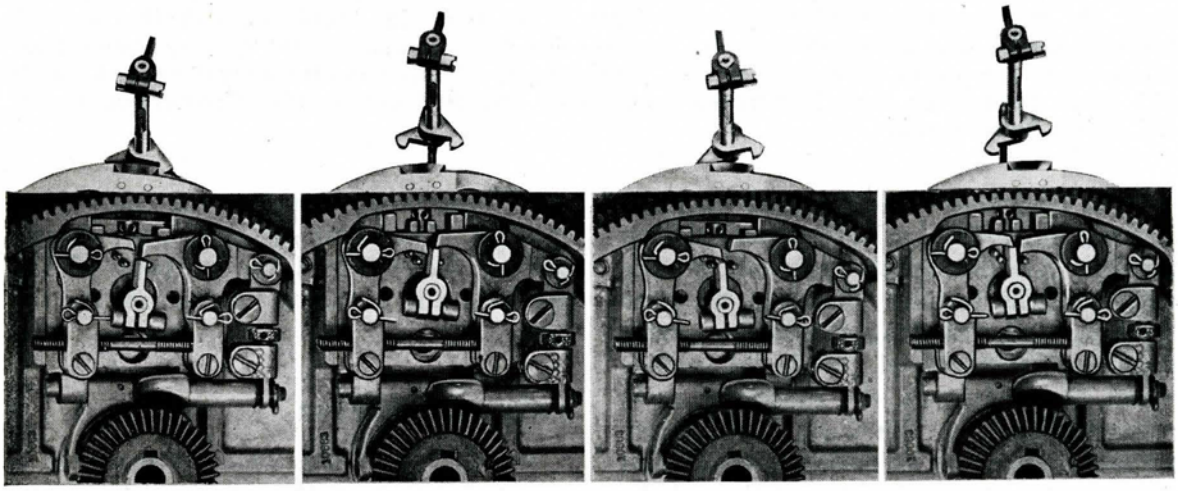

Figure 87A —Operation of Pallet Mechanism

Top view above shows cam pawls forward with port pawl engaging port groove, causing pallet blade to swing to position opposite port pallet pawl. Lower view shows pallet blade in position for thrust against pawl.

Pallet assembly has been thrust aft by motion of pallet slide; pallet blade pivots port pallet pawl aft. To avoid disturbance of gyro, pallet slide is kept in constant motion fore and aft, so contacts with cam are momentary.

Pallet assembly has been brought back by motion of pallet slide; torpedo is now assumed to have swung off course to starboard. Starboard cam pawl engages starboard groove in cam plate, and pallet blade swings to starboard.

The pallet blade having received its "steering orders" through momentary contact of the cam pawls with the cam and plate, the pallet moves aft, pushing the toe of the starboard pallet pawl aft.

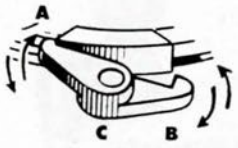

Figure 87C —Cam pawls "A" and "B" have a span just over the width of cam; if put in contact with cam with torpedo off course either way, one pawl or the other will drop into recess above ridge to which it is opposite. "C" receives pallet shaft "A" (at right); pawls are pinned to shaft and oscillate it to right or left. Leaf spring "B" lies in recess in shaft to prevent it from chattering in pallet holder.



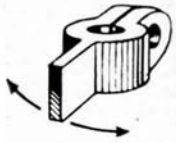

Figure 87D —Pallet (at left) mounts at top of pallet shaft and clamps to it, with blade facing aft and at right angles to the oscillating plane of the cam pawls.



Figure 87E — At left, cam pawls, pallet shaft, and pallet are assembled; movement of cam pawls to right or left due to contact with cam or cam plate results in corresponding movement of pallet blade. Contact of cam pawls with the cam must be brief to avoid disturbance to the gyro; hence holder for pallet shaft assembly rides in a pallet slide (see Fig. 86).

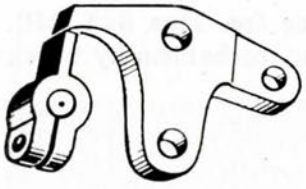

Figure 87F — The pallet blade, having taken a right or left hand throw from the cam pawls, is advanced by movement of the pallet slide and moves one or the other of two pallet pawls about its pivot; at left is left hand or port pallet pawl.



Figure 87G —At right is right hand or starboard pallet pawl with pallet blade thrusting against it. The pallet pawls are positioned so that if cam pawls straddle cam, pallet blade passes between pallet pawls.

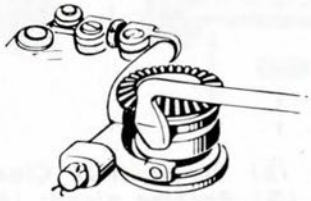

Figure 87H —To further pass on the directional motion set up by the cam and cam pawls, an "extender" is mounted on the left hand pallet pawl; an arm pinned to the extender pivots a bell crank in an up-and-down movement, as the arm is given a back-and-forth movement by the extender. A linkage arrangement (Fig. 87I) results in the left hand pallet pawl moving forward when the right hand pallet pawl is thrust aft by the pallet blade.

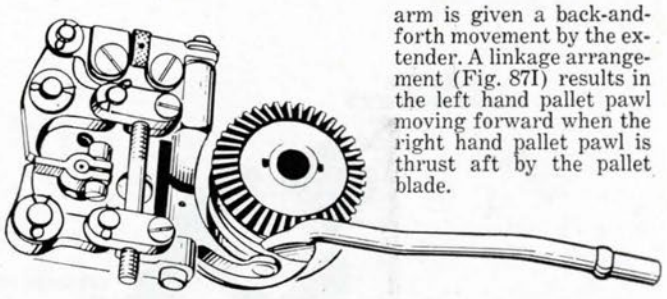

Figure 87 I —

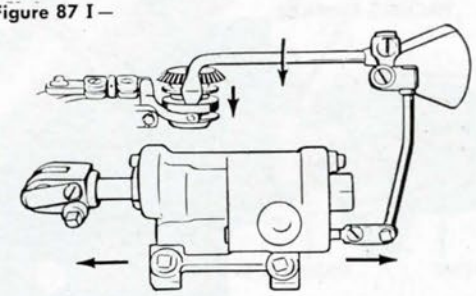

Figure 87J —To complete the steering process, when the port cam pawl is thrown aft by the pallet blade the bell crank throws the connection spool and the valve rock shaft arm downward, which, through the linkage, results in a forward motion of the steering engine valve and aft movement of the piston, as shown by the arrows; the rudders are then thrown hard to port.

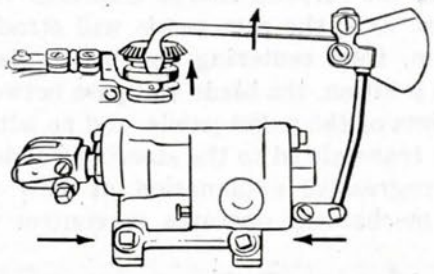

Figure 87K —When the starboard cam pawl is thrown aft by the pallet blade, the motion of the connection spool and the valve rock shaft arm is upward, and the steering engine valve moves aft, the piston forward, as shown by the arrows; the rudders are then thrown hard to starboard.

The cam pawls are carried on a small shaft known as the pallet shaft (see Fig. 86).

When the torpedo course varies on either side of the axis of the gyro, one of the cam pawls will have moved into line with and will contact the cam, imparting a slight rotary movement to the pallet shaft, thus actuating the steering engine and steering rudders through the pallet mechanism (see Fig. 85).

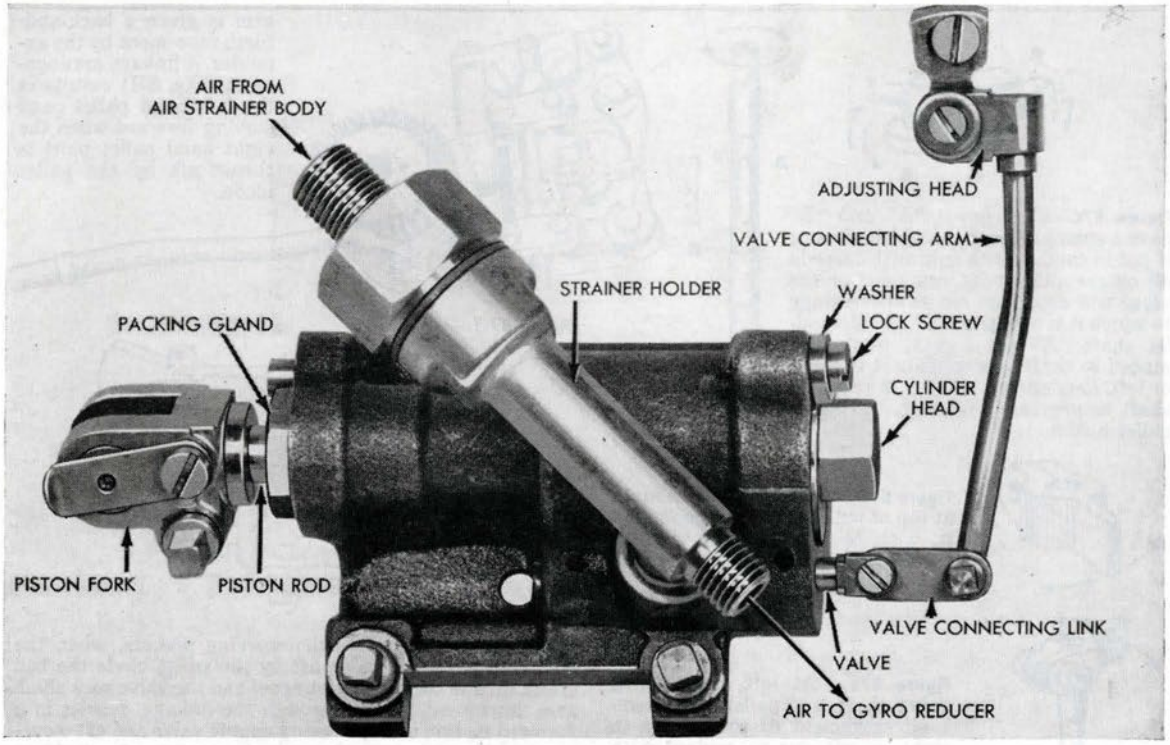

Figure 88A—Steering Engine, Assembled, showing Linkage to Valve Rockshaft

When the torpedo course coincides with the gyro axis, the cam pawls will straddle the cam, thus centering the pallet blade. In this position, the blade will pass between the points of the pallet pawls, and no action will be transmitted to the steering rudders.

A progressive explanation of how the pallet mechanism operates to control the operation of the steering engine, and through it the steering rudders, is given in the drawings and the accompanying explanatory text in Figs. 87A to 87K.

Steering Engine

The steering engine (see Figs. 84A, 84B, 89A, and 89B) is the mechanism by which

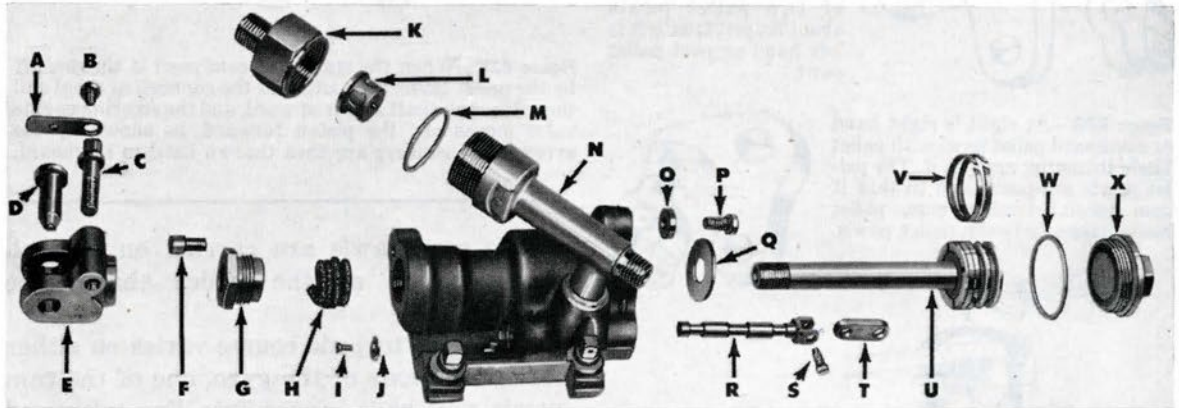

Figure 88B—Steering Engine, disassembled—(A) Locking clip; (B) Screw; (C) Clamp screw; (D) Rudder-rod pin; (E) Piston fork; (F) Lock screw; (G) Packing gland; (H) Packing; (I) Screw; (J) Stop washer; (K) Strainer holder cap; (L) Strainer; (M) Washer; (N) Strainer holder; (O) Washer; (P) Lock screw; (Q) Adjusting washer; (R) Valve; (S) Screw; (T) Valve link; (U) Piston and piston rod; (V) Piston rings; (W) Head gaskets; (X) Cylinder head

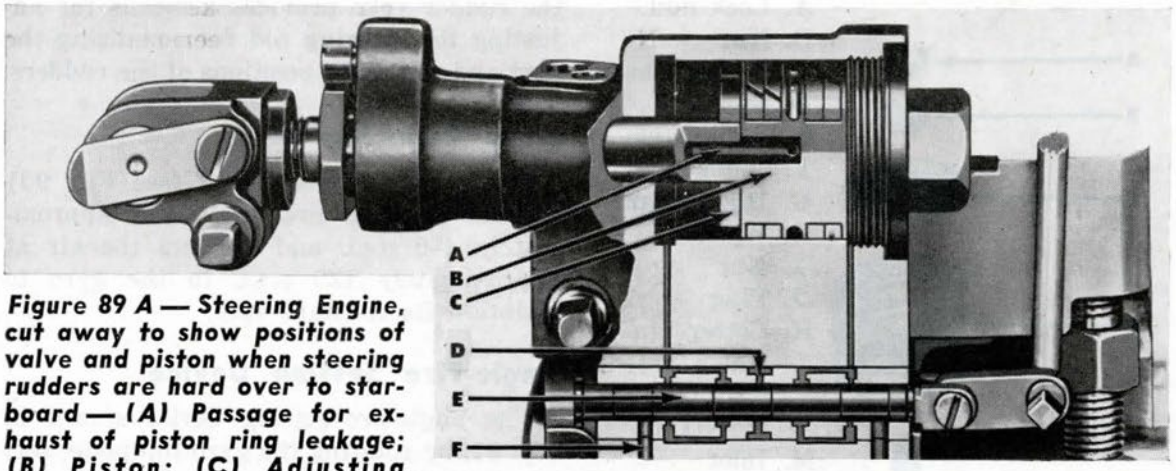

Figure 89 A — Steering Engine, cut away to show positions of valve and piston when steering rudders are hard over to starboard — (A) Passage for exhaust of piston ring leakage; (B) Piston; (C) Adjusting washer which controls engine stroke; (D) Air inlet chamber; (E) Valve; (F) Exhaust port. Note that when valve is aft, piston is forward.

the directive force of the gyro is multiplied to give sufficient power for effective operation of the steering rudders to correct deviation recorded by the gyro. The engine has a single cylinder (see Figs. 89A and 89B), with a piston operated by the admission of air at reduced pressure at either end, the air being admitted through a valve operated by the pallet mechanism.

Steering Line

The portion of the steering-rudder operating mechanism between the steering engine and the rudders is called the **steering line.** The motion of the steering engine is transferred to the steering rudders through the steering line, as shown in Fig. 67.

With the steering engine piston moving aft, the rudder rod is being pushed in the same direction, changing the angle of the rudder yoke, with a consequent movement of the steering rudders to port. The forward movement of the steering engine piston would have the reverse effect, changing the angle of the rudder yoke so the movement of the steering rudders would be to starboard.

An adjustable extension on the steering rod between the bulkhead connection and

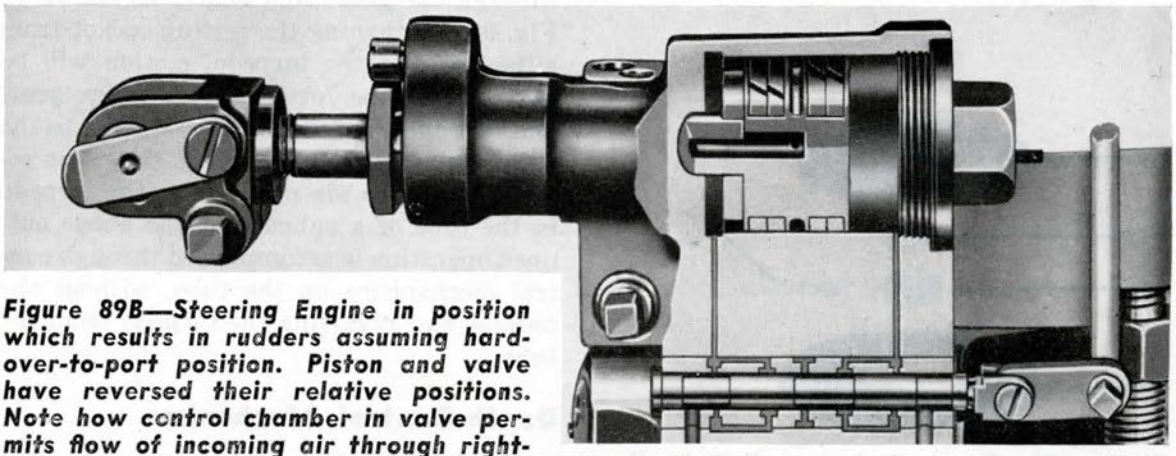

Figure 89B—Steering Engine in position which results in rudders assuming hard-over-to-port position. Piston and valve have reversed their relative positions. Note how control chamber in valve permits flow of incoming air through right-hand intake channel to cylinder, while chamber at left-hand end of valve opens channel for exhaust (compare with Fig. 89A).

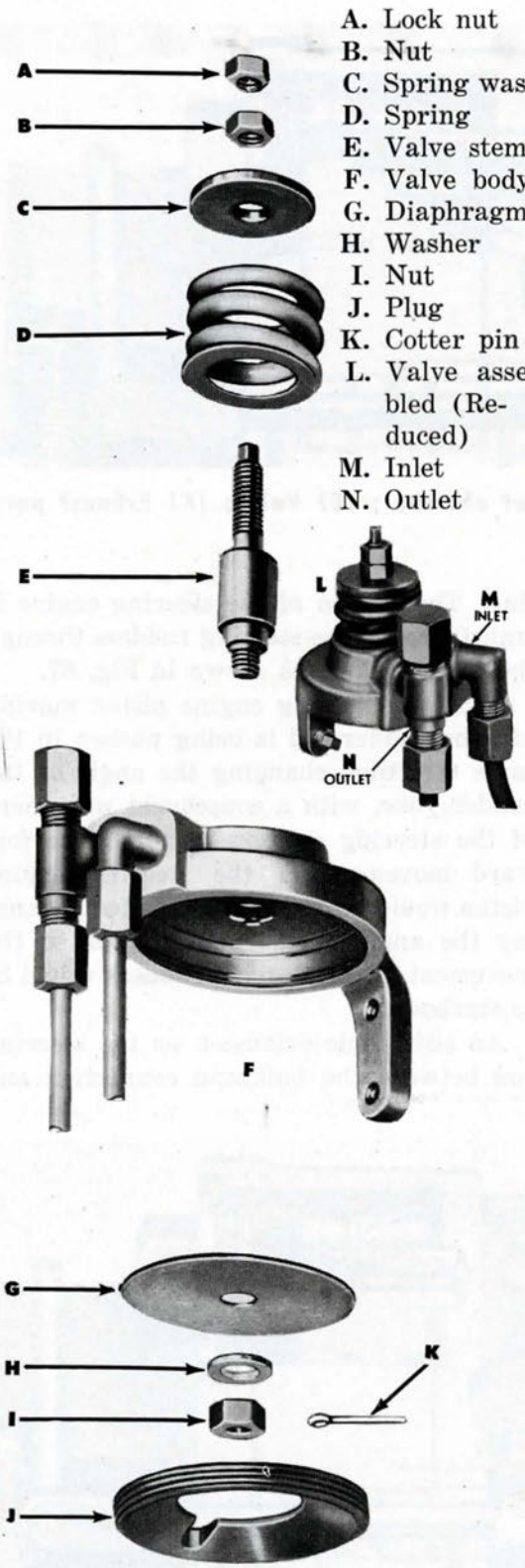

A. Lock nut
B. Nut
C. Spring washer
D. Spring
E. Valve stem
F. Valve body
G. Diaphragm
H. Washer
I. Nut
J. Plug
K. Cotter pin
L. Valve assembled (Reduced)
M. Inlet
N. Outlet

Figure 90—Gyro Reducing Valve, disassembled and assembled

the rudder yoke provides a means for adjusting the steering rod for equalizing the port and starboard positions of the rudders.

Gyro Reducing Valve

The gyro reducing valve (see Fig. 90) reduces the air pressure from approximately 450 p.s.i. and delivers the air at approximately 125 p.s.i. to the gyro to maintain its constant spin.

Angle-Fire Setting Device

The angle-fire setting device shown in Fig. 91, by rotating the gyro top plate, sets the desired angle between the pallet pawls and the cam on the gyroscope, and thereby the angle through which the torpedo will run. This action is shown diagrammatically in Fig. 84, with the accompanying text. The later Torpedoes Mk 14 Type are fitted with side setting devices only; changes from side setting to bottom setting cannot be accomplished in service without major modifications.

The top plate is rotated by a worm carried in a bracket attached to the gyro pot (Fig. 92) and meshing with the teeth cut around the outer periphery of the top plate. The flanged ends of the worm shaft and the sockets attached to the ends of this shaft are machined for connecting with the index levers. Connection from the side setting sockets to the index levers, and thus to the worm for indexing the gyro pot, is made through the gears and shafts as shown in Fig. 91. By turning the setting socket from either side of the torpedo, motion will be imparted to the forward gyro index gear, and through the index gear and lever to the index worm spindle and worm, the worm rotating the gyro top plate. With the torpedo in the tube of a submarine, the above outlined operation is accomplished through control mechanisms on the tube, without the necessity of removing the torpedo from the tube.

Depth-Control Mechanism

The depth-control mechanism, or the immersion mechanism as it is also called (see

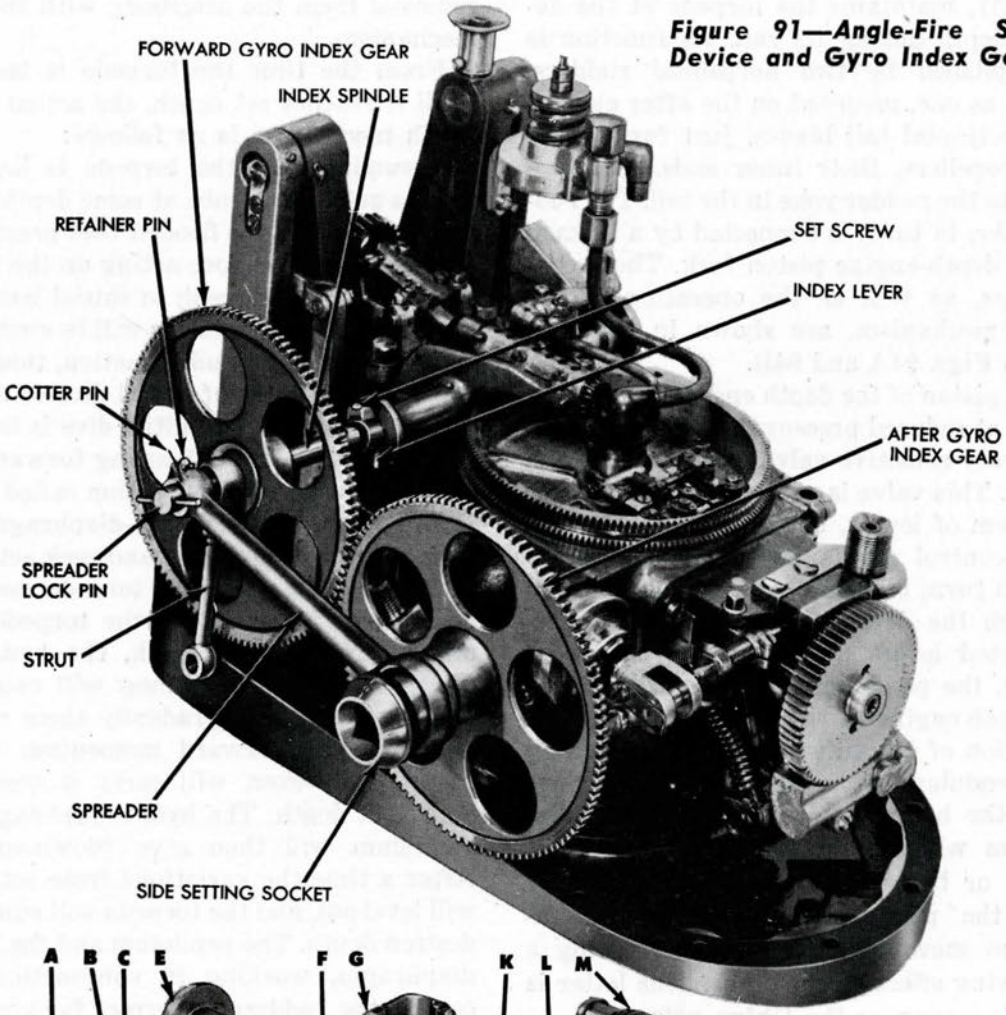

Figure 91—Angle-Fire Setting Device and Gyro Index Gears

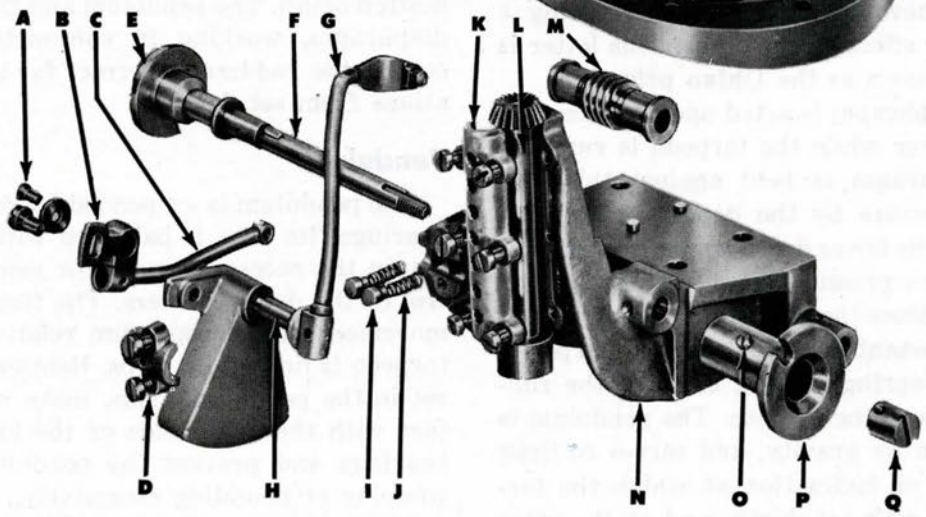

Figure 92—Angle-Fire Setting Bracket and Countershaft Assembly, Disassembled—(A) Screws and washer for securing adjusting head to valve rock shaft; (B) Adjusting head; (C) Valve connection arm; (D) Bearing cap and screw; (E) Socket; (F) Worm spindle; (G) Valve rock-shaft arm; (H) Valve rock shaft; (I) Spring button; (J) Spring; (K) Bearing cap and screw; (L) Driving spindle; (M) Worm; (N) Bracket for driving spindle; (O) Lock screw; (P) Socket; (Q) Nut

Fig. 93), maintains the torpedo at the desired depth during its run. Its function is accomplished by two horizontal rudders, acting as one, mounted on the after ends of the horizontal tail blades, just forward of the propellers, their inner ends being secured to the rudder yoke in the tail. The rudder yoke, in turn, is connected by a linkage to the depth-engine piston fork. These connections, as well as the operation of the depth mechanism, are shown in Fig. 93; also in Figs. 94A and 94B.

The piston of the depth engine is operated by air at reduced pressure, and is controlled by a very sensitive valve located inside the piston. This valve is connected, by means of a system of levers, to the pendulum of the depth-control mechanism; and the pendulum, in turn, is connected to the diaphragm through the depth-spring socket by interconnected levers and links. As thus connected, the pendulum, the diaphragm, and the depth engine valve move simultaneously.

Motion of the valve may be produced by the pendulum when the torpedo inclines from the horizontal, or by the hydro-diaphragm when the torpedo is off the set depth, or by both in combination. In any case, the pendulum and the hydro-diaphragm move together, each exercising a modifying effect on the other. This latter is what is known as the **Uhlan principle.**

The diaphragm is acted upon by pressure of sea water while the torpedo is running. The diaphragm is held against this seawater pressure by the depth spring, connected to the lower depth-spring socket, plus atmospheric pressure in a pressure-tight air chamber. Since the pressure in the air chamber is constant for all practical purposes, the depth-spring loading controls the running depth of the torpedo. The pendulum is acted upon by gravity, and serves to limit the angle of inclination at which the torpedo may seek set depth, and at the same time tends to steady the torpedo at set depth.

The depth-control mechanism is assembled on the same base as the gyro mechanism, as shown in Fig. 66, and is therefore removed from the afterbody with the gyro mechanism.

From the time the torpedo is launched until it reaches set depth, the action of the depth mechanism is as follows:

Assuming that the torpedo is launched from a submarine tube at some depth under water with the tube flooded (sea pressure in the tube and therefore acting on the hydro-diaphragm), as a result of initial launching momentum, the pendulum will be swung aft, calling for a down-rudder action, thus causing varying depths of initial dive of the torpedo. As soon as this initial dive is in progress, the pendulum will swing forward and, in combination with the action called for by the pressure on the hydro-diaphragm, will cause the torpedo to rise and seek set depth as the speed at which the torpedo control is effective is attained. As the torpedo rises and approaches set depth, the hydro-diaphragm and the pendulum will cause the rudders to assume gradually their neutral position. The forward momentum of the torpedo, however, will carry it somewhat above set depth. The hydro-diaphragm and pendulum will then give "down-rudder". After a time the variations from set depth will level out, and the torpedo will run at the desired depth. The pendulum and the hydro-diaphragm, working in conjunction, will control the rudders to correct for any deviations from set depth.

Pendulum

The pendulum is suspended on knife-edge bearings. Its base is ballasted with lead to obtain the necessary mass for smooth control of the depth rudders. The fore-and-aft movement of the pendulum relative to the torpedo is limited by stops. Retainer plates, set in the pendulum arms, make near contact with the under side of the knife-edge bearings and prevent the pendulum from jumping or pounding excessively.

The pendulum may be subjected to severe side forces, and in order to prevent damage to its supports, the under side of the pendulum has guides which just clear rollers attached to the depth-mechanism casing (see Fig. 95-2 and 3). Normally

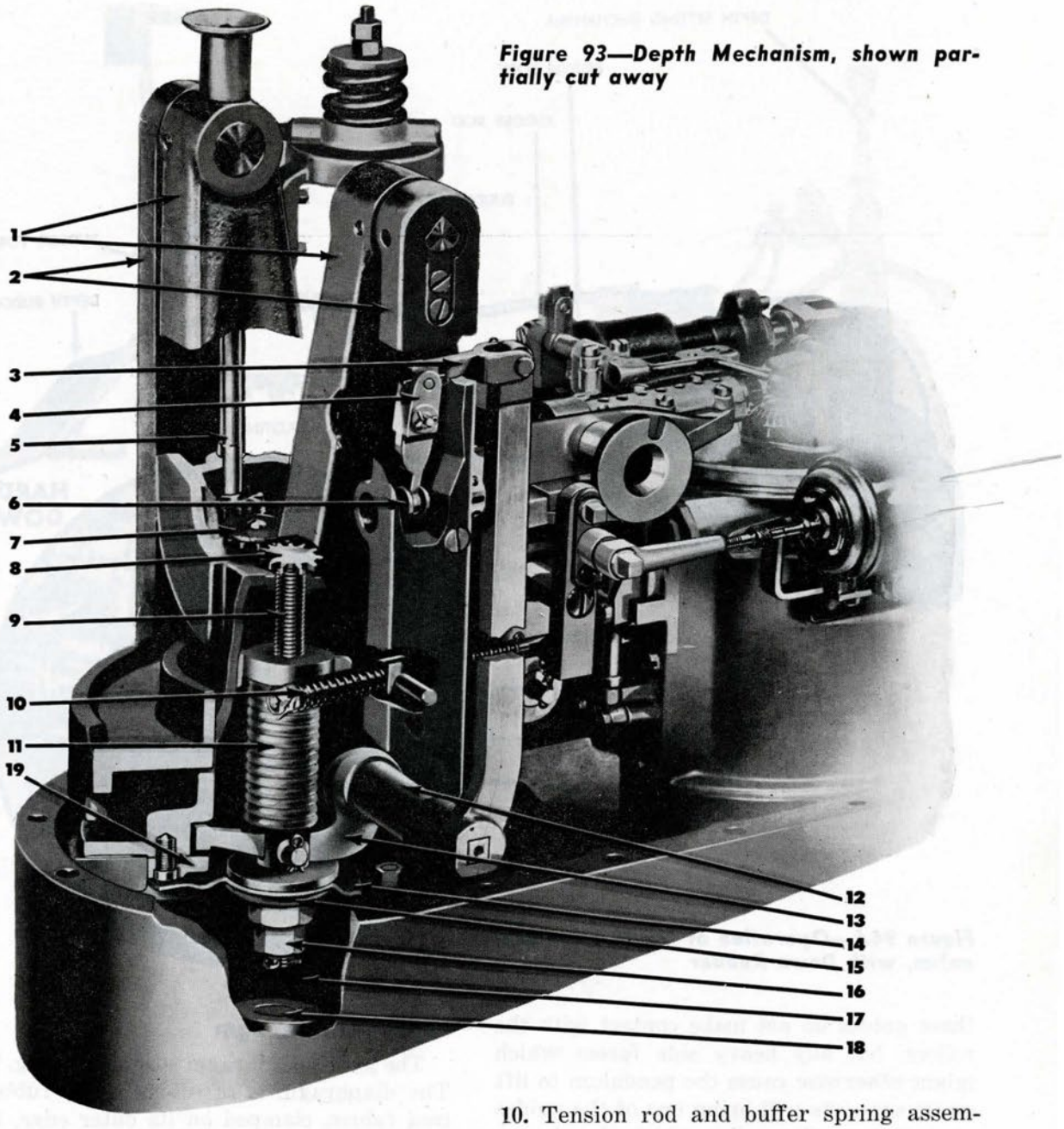

Figure 93—Depth Mechanism, shown partially cut away

1. Pendulum bracket or depth-mechanism casing
2. Pendulum
3. Pendulum link
4. Linkage adjusting arm
5. Depth-spring adjusting spindle
6. Linkage adjusting screw
7. Idler gear
8. Depth-spring adjusting-screw gear
9. Depth-spring adjusting screw
10. Tension rod and buffer spring assembly
11. Depth spring
12. Diaphragm-lever shaft
13. Diaphragm lever
14. Diaphragm
15. Diaphragm plate
16. Clamp nut
17. Air chamber
18. Plug
19. Diaphragm ring

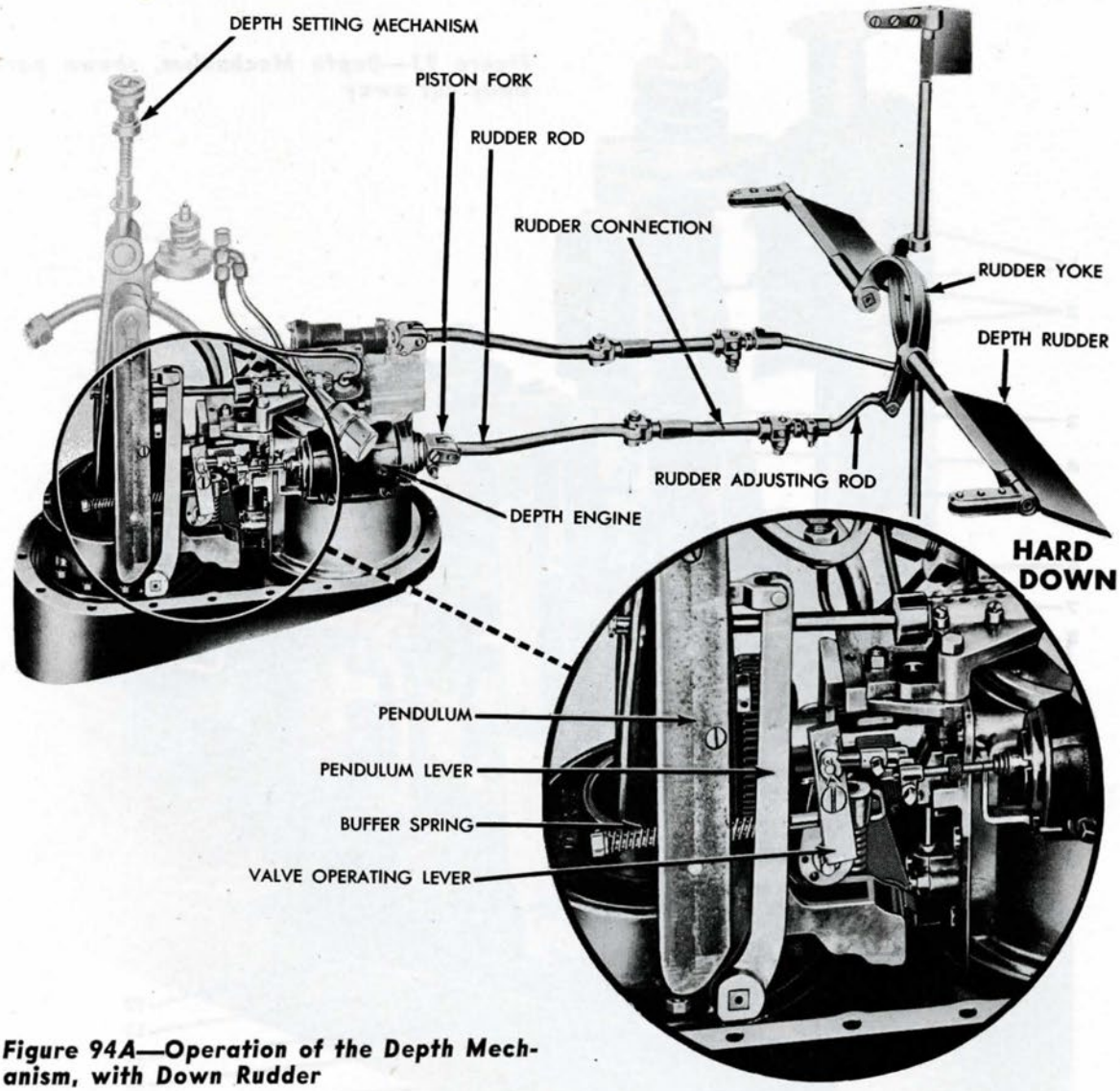

Figure 94A—Operation of the Depth Mechanism, with Down Rudder

these guides do not make contact with the rollers, but any heavy side forces which might otherwise cause the pendulum to lift on its supports will bring one of the guides against its mating roller, which absorbs the shock. The clearance between the guides and mating rollers is such that the rollers do not contact the guides when the casing is not inclined more than 30 degrees to either side. Figs. 95A to 95H show views of the pendulum and other related parts of the depth mechanism. These views are arranged to give a clear picture of the pendulum and its operation.

Hydro-Diaphragm

The hydro-diaphragm is shown in Fig. 96. The diaphragm is of oil-resistant, rubberized fabric, clamped on its outer edge, between the diaphragm ring and the air chamber. The parts and assembly are shown in Fig. 96.

Water enters to exert its pressure upon the upper side of the diaphragm through an inlet pipe, the open end of which is located in the midship section. A small hole is drilled in the diaphragm ring to vent air which may be trapped in this chamber by the incoming water.

Figure 94B—Operation of the Depth Mechanism, with Up Rudder

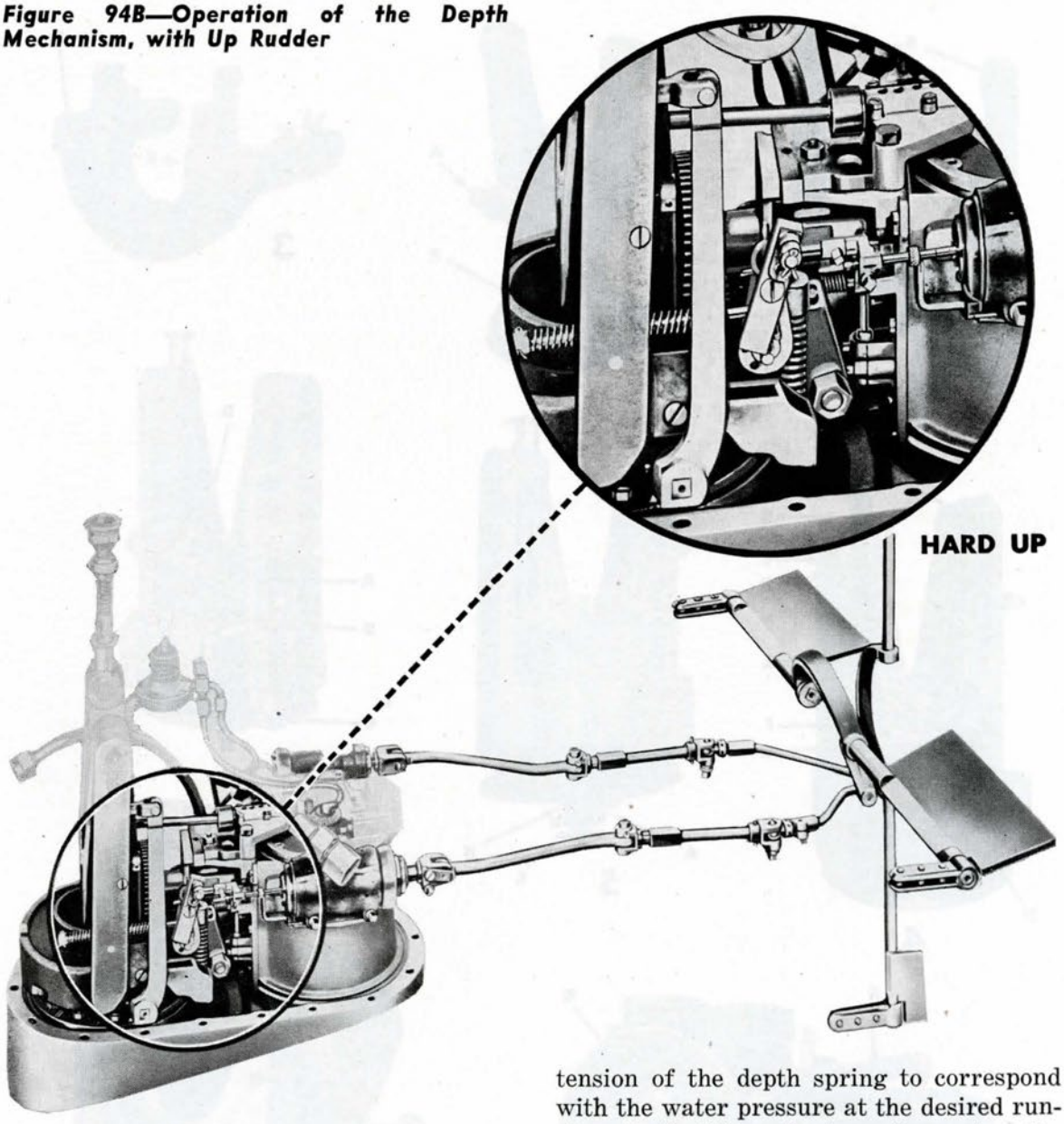

The diaphragm has a very limited movement, which is so multiplied that the ratio of the valve movement to the diaphragm movement is 18 to 1. The small amount of free diaphragm area between the outer and inner supported areas gives ample flexibility to the small movement required up to a 50-foot depth setting.

Depth-Setting Mechanism

The depth-setting mechanism (see Figs. 97A and 97B) is a device for setting the tension of the depth spring to correspond with the water pressure at the desired running depth. When the torpedo reaches the set depth, the force exerted by the water on the diaphragm balances the force exerted by the spring on the diaphragm. The setting is indicated on a graduated dial, called the **depth index wheel.**

There are two major units in the depth setting mechanism: the depth-index flange assembly, and the spring-socket assembly. The depth-index flange contains all the parts secured to the afterbody shell, and in its center is the depth-index spindle which passes through a stuffing box in the flange.

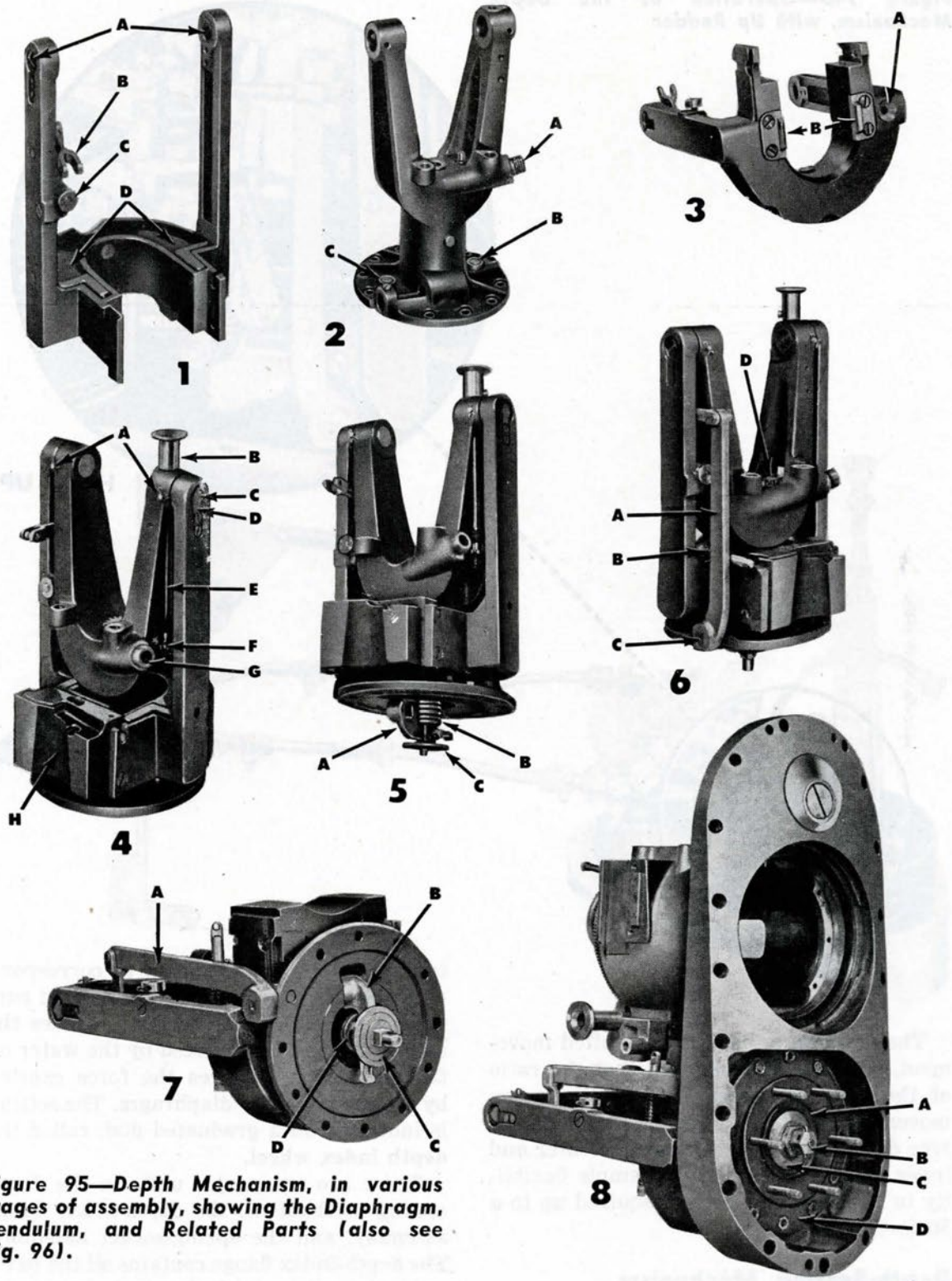

Figure 95—Depth Mechanism, in various stages of assembly, showing the Diaphragm, Pendulum, and Related Parts (also see Fig. 96).

Illustration 1 shows pendulum with (A) Knife-edge bushings; (B) Pendulum link; (C) Linkage-adjusting screw; and (D) Lead ballast.

Illustration 2 shows depth-mechanism, casing, or pendulum bracket, with (A) Water inlet; (B) and (C) Pendulum guide rollers.

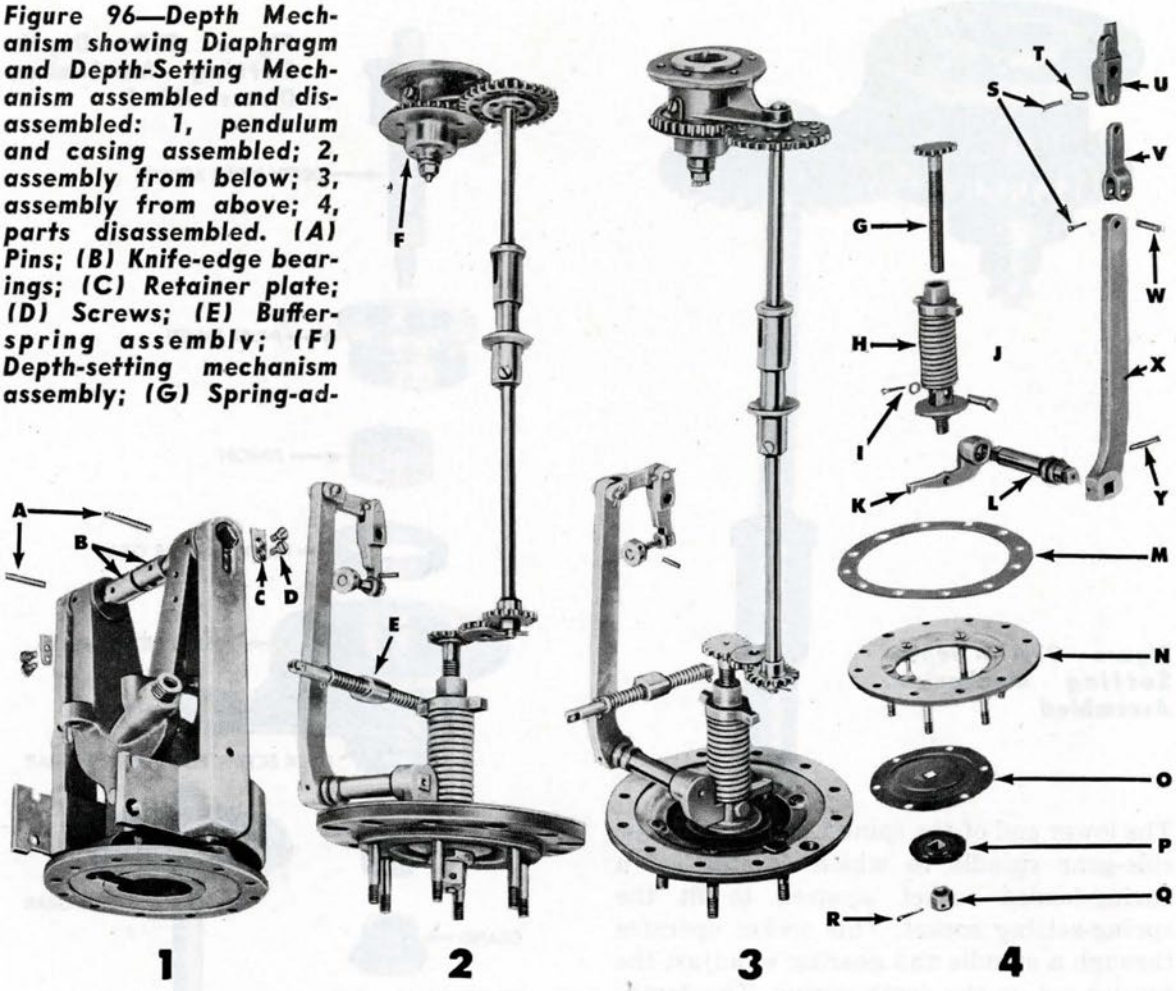

Figure 96—Depth Mechanism showing Diaphragm and Depth-Setting Mechanism assembled and disassembled: 1, pendulum and casing assembled; 2, assembly from below; 3, assembly from above; 4, parts disassembled. (A) Pins; (B) Knife-edge bearings; (C) Retainer plate; (D) Screws; (E) Buffer-spring assembly; (F) Depth-setting mechanism assembly; (G) Spring-adjusting screw; (H) depth spring and socket assembly; (I) Cotter pin and washer; (J) Pin; (K) Diaphragm lever; (L) Pendulum and diaphragm-level shaft; (M) Gasket; (N) Diaphragm ring; (O) Diaphragm; (P) Diaphragm plate; (Q) Nut; (R) Cotter pin; (S) Cotter pins; (T) Adjusting-linkage pin; (U) Adjusting arm; (V) Link; (W) Pin; (X) Pendulum lever; (Y) Taper pin.

Illustration 3 shows under side of pendulum, with (A) Transportation-screw hole, and (B) Pendulum guides.

Illustration 4 shows pendulum suspended on knife-edge bearings in bracket, with (A) Taper pins and cotter pins securing knife-edge bearings in casing arms, (B) Socket for spring-adjusting spindle, (C) Knife-edge bearings, (D) Retainer plate, (E) Spring-adjusting spindle, (F) Spindle gear, (G) Water inlet, and (H) After section of pendulum.

Illustration 5 shows (A) Diaphragm lever, (B) Depth spring, and (C) Lower depth-spring socket.

Illustration 6 shows assembly ready for mounting on diaphragm ring and diaphragm, with (A) Pendulum lever, (B) Buffer spring and tension rod assembly, (C) Diaphragm and pendulum-lever shaft, and (D) Idler gear.

Illustration 7 shows under side of pendulum assembly before addition of diaphragm assembly, with (A) Pendulum lever, (B) Diaphragm lever, (C) Lower depth-spring socket, and (D) Depth spring. Note recess in casting above diaphragm lever "B"; diaphragm lever pivots within this recess on the pendulum-lever shaft.

Illustration 8 shows assembly complete, with (A) Diaphragm, (B) Nut, (C) Diaphragm plate, (D) Diaphragm ring. Note that diaphragm ring "D" is mounted so projection on inner circumference provides lower bearing surface for diaphragm lever (see "B" in illustration 7). Also note that lower end of nut "B" is tapped to receive hook rod for testing weight.



Figure 97A — Depth-Setting Mechanism, Assembled



Figure 97B — Depth-Setting Mechanism, Disassembled

The lower end of the spindle is geared to the side-gear spindle to which is attached a spring-loaded socket squared to fit the spring-setting socket. This socket operates through a spindle and gearing to adjust the tension set on the depth spring. The depth-index spindle and gear assembly transfer the movement for setting the depth spring from the outside of the afterbody to the depth mechanism.

The depth-index wheel (see Fig. 97B) is a graduated dial which takes on a reduced motion from the depth-index spindle through a gear system. The depth index should never be set below zero.

Depth-Engine

The depth engine (see Figs. 98A and 98B) is mounted on the port side of the gyro pot (see Fig. 67). Its function is to move the depth rudders as required to keep the torpedo at its set depth. The operating linkage between the pendulum, hydro-diaphragm, and valve is shown in Figs. 93, 94A, and 94B. The operation of the depth

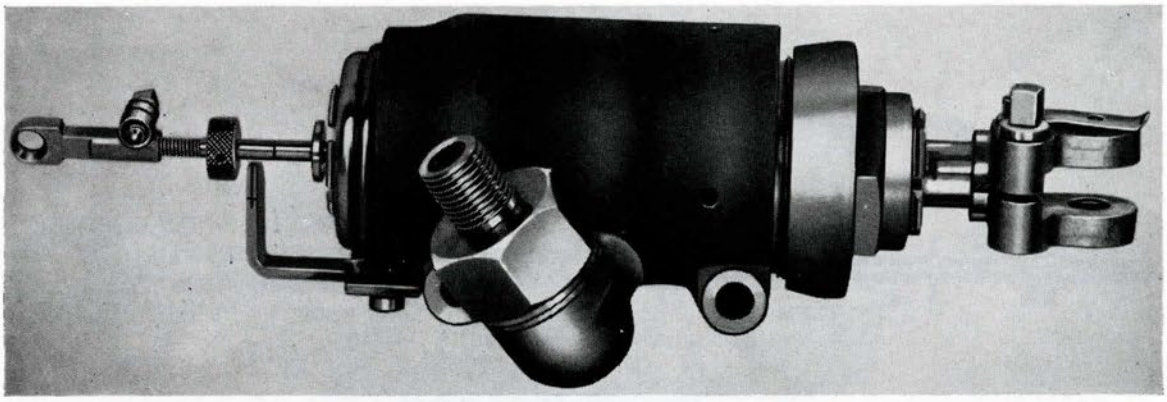

Figure 98A—Depth Engine, Assembled (See below for parts disassembled).

engine is shown diagrammatically in Figs. 99 and 99A, also 94A and 94B.

It is a follow-up type engine controlled by a sensitive internal valve. This valve receives its action from either the pendulum

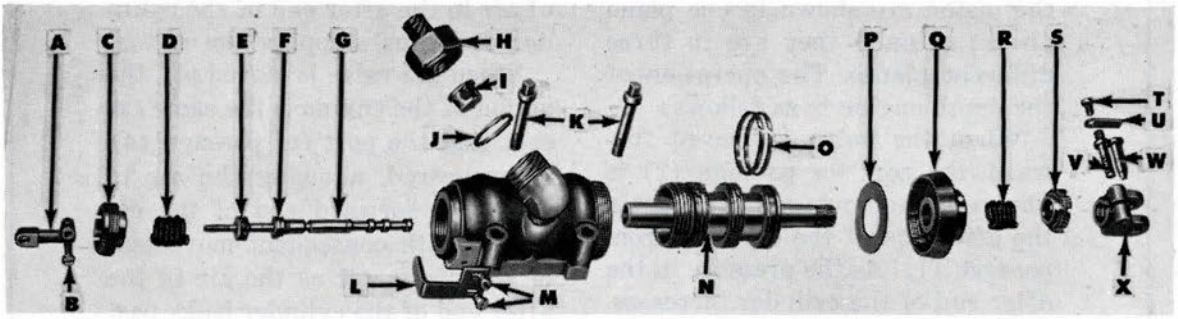

Figure 98B—Depth Engine, Disassembled—(A) Valve connection; (B) Clamp screw; (C) Packing Gland; (D) Packing; (E) Valve connecting rod; (F) Stop plug; (G) Valve; (H) Strainer-holder cap; (I) Strainer; (J) Washer; (K) Holding screws; (L) Valve stop; (M) Screws; (N) Piston (six rings in place); (O) Piston rings; (P) Washer; (Q) Cylinder head; (R) Packing; (S) Gland; (T) Lock screw; (U) Clip; (V) Clamp screw; (W) Rudder-rod pin; (X) Piston fork

or the diaphragm through inter-connected levers and linkages. The piston follows the action of the valve, and transmits control from the pendulum or diaphragm to the rudders with an enormously increased force. A high sensitivity of the valve is necessary by reason of the extremely small forces available through the pendulum and hydro-diaphragm as the torpedo varies slightly from set depth. Smoothness of depth performance is dependent upon smoothness of depth-engine control-valve performance.

The movement of the piston is normally so close behind that of the valve that the air at the exhaust end of the cylinder is forced out by leakage over the end piston rings, and through the valve ports into the two exhaust chambers on the outer surface of the piston. The action results in a slowing and cushioning of the piston stroke, through which extremely smooth action of the piston is obtained. If the exhaust ports opened simultaneously with the supply ports, the hammering action of the piston would soon wear out the engine.

Figure 100 shows the buffer spring and tension rod assembly, which provides a cushioned linkage between the pendulum and the valve lever, transmitting the fore-and-aft motion of the pendulum to the valve lever smoothly.

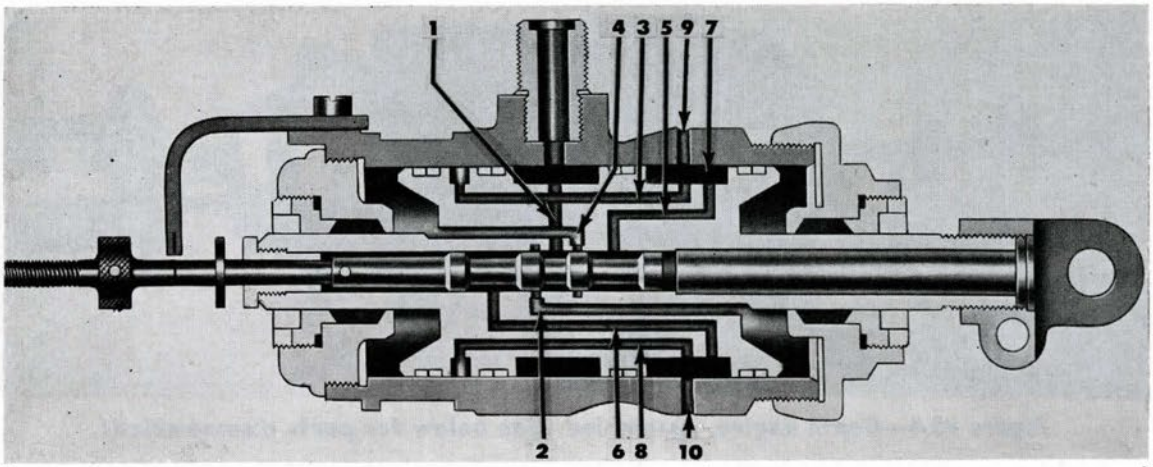

Figure 99—Operation of Depth Engine, Diagrammatic Drawing

For convenience, all passages in the piston are shown in one plane above; actually they are in three different planes. The operation of the depth engine is as follows:

When the valve is moved forward, the port for passage (2) is uncovered, allowing air to enter the after end of the cylinder from passage (1). As the pressure in the after end of the cylinder increases, the piston moves forward as the air in the forward end of the cylinder leaks past the piston rings into passages (3) and (8), and from passage (4) past the valve into pasage (5). The leakage into passages (3), (8), and (5) empties into the exhaust chamber (7) surrounding the after end of the piston, and thence through passages (9) and (10) into the afterbody. The piston continues to move until it reaches the position where the valve is again central, at which point the valve covers the port for passage (2), cutting off the supply of air to the after end of the cylinder and thus stopping the piston.

When the valve is moved aft, the action of the engine is the same except that the port for passage (4) is uncovered, allowing the air to enter the forward end of the cylinder, with consequent movement of the piston aft as the air in the after end of the cylinder leaks past the piston rings into the exhaust chamber (7), and from passage (2) past the valve through passage (6) into the exhaust chamber (7), thence to the afterbody through passages (9) and (10). Motion of the piston stops when it reaches the position where the valve is again centered within it, at which point the port for passage (4) is again covered, cutting off the supply of air to the forward end of the cylinder, thus stopping the piston.

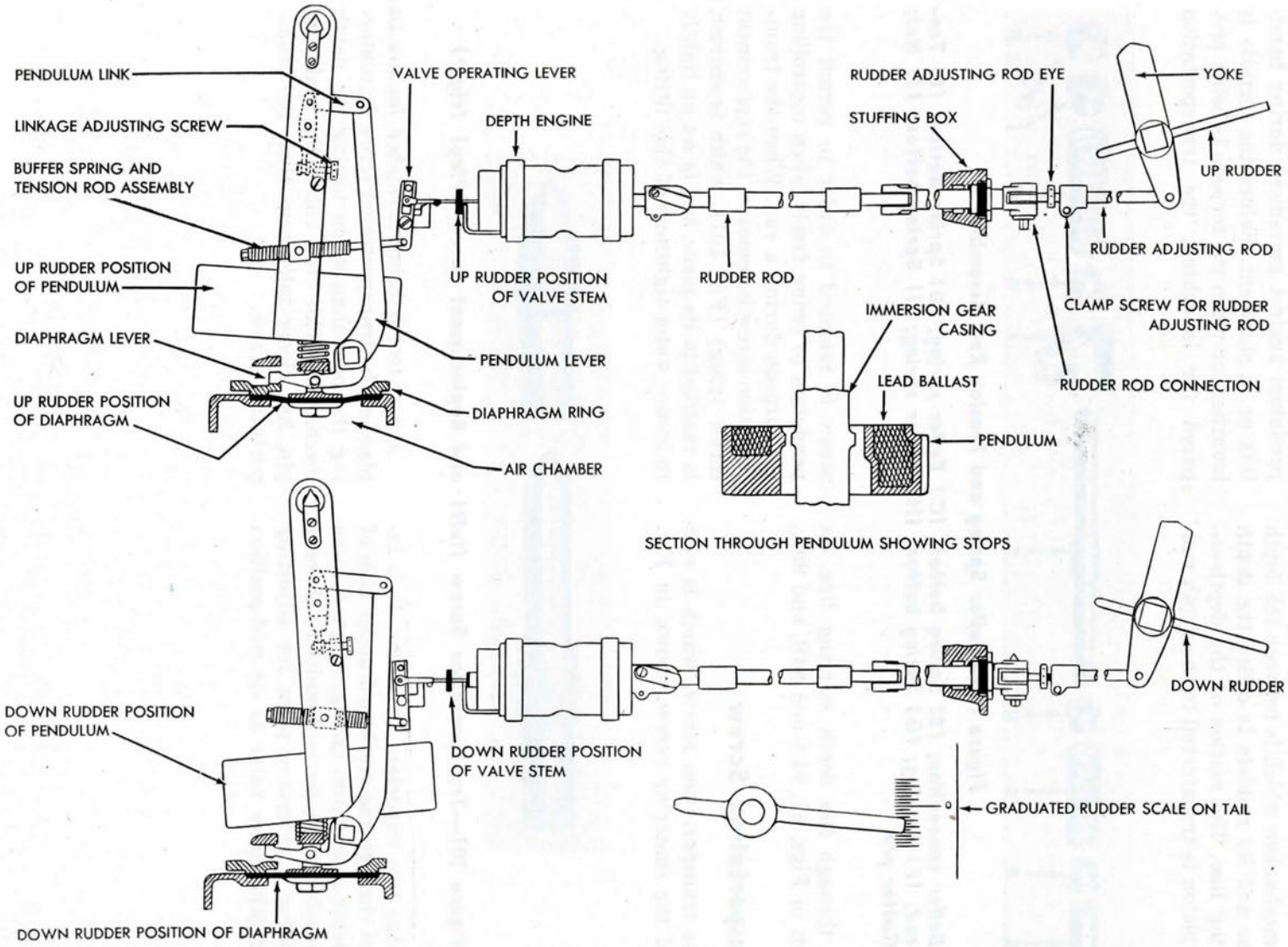

Figure 99A—Depth Mechanism, diagram showing how diaphragm and pendulum operate depth engine and the depth rudders

Depth Steering Line

That portion of the depth-rudder operating mechanism which is between the depth engine and its rudders is called the **depth steering line.** The motion of the depth-engine piston is transferred to the depth rudders through the depth steering line, as shown in Figs. 67, 94A and 94B, and 99A.

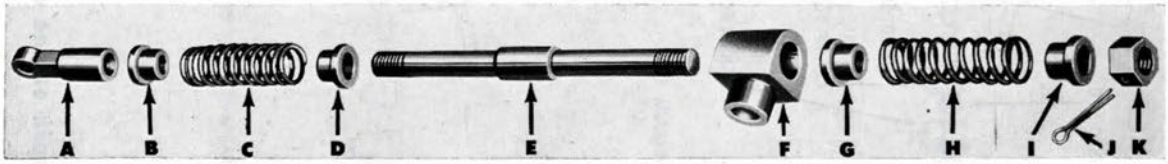

Figure 100—Buffer Spring and Tension Rod Assembly

(A) Buffer connection; (B) Spring button; (C) Buffer spring; (D) Spring button; (E) Tension rod; (F) Bearing; (G) Spring button; (H) Buffer spring; (I) Spring button; (J) Nut; (K) Cotter pin

Transportation Screw

The transportation screw, which is also called the centering screw, shown in Fig. 101, has two important functions. It is inserted through the starboard under side of the depth-mechanism casing, where it locks the pendulum in its mid-position, thereby providing a reference point for adjusting the depth-engine valve to its mid-position and the diaphragm lever to its mid-position. Also, the transportation screw locks the pendulum against movement during handling or in shipment. Before the torpedo is launched, or when the torpedo is being prepared for launching, the transportation screw is removed in order to permit the pendulum to swing freely when controlling the torpedo during a run. When the transportation screw is removed, the replacement screw (plug) (Fig. 101), which is shorter, is inserted in its place, and is set up tightly to insure water-tightness of this fitting.

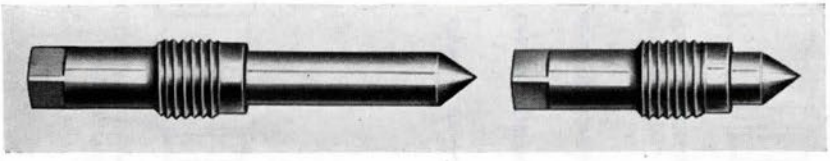

Figure 101—Transportation Screw (left) and Replacement Screw (Plug) (right)

A new tool is being furnished for use in place of the transportation screw in centering the pendulum when testing the depth mechanism. This tool, called the centering pin, has closer tolerances than the transportation screw.

Chapter 7

ADJUSTMENTS AND TESTS

GENERAL
SECTION 1—Preliminary Adjustments
SECTION 2—Leak-Meter Test of Torpedo
SECTION 3—Test and Installation of Exercise Head
SECTION 4—Final Adjustments and Final Preparation for Firing
SECTION 5—Treatment After a Run
SECTION 6—Routine for Upkeep of Fully Ready Torpedo
SECTION 7—Lubrication Guide
SECTION 8—General Information

GENERAL

1. **Preliminary Adjustments** are made to ascertain that there are no leaks, and that various controlling units will function properly as received from overhaul, also to check coincidence of reference marks together with index dials and pointers for alignment and accuracy. With preliminary adjustments completed, the torpedo is ready for final adjustments.

2. **Final Adjustments** are made in preparation for a war shot or for an exercise of a torpedo.

3. It will be noted that symbols (capital letters) are used to designate oils, greases, and preservatives having application in various steps of the adjustments. Explanation of these symbols is given below:

Symbol	Description
A	Gyro Oil, blended by the Naval Torpedo Station, Newport, R. I., and obtainable only by requisition to tenders, bases or stations.
B	Hot Running Torpedo Oil, purchased under annual contract by the Bureau of Supplies and Accounts. (As alternate use H).
C	Light Lubricating Oil, Forced-Feed and Motor Cylinder Oil, Light. Navy symbol 2110, purchased under annual contract by the Bureau of Supplies and Accounts.
D	Compounded Steam Cylinder Oil, Navy symbol 5190, purchased under contract by the Bureau of Supplies and Accounts. (600-W or its equivalent.)
E	Petrolatum, purchased under Navy Department Specifications 14-P-1.
F	Grease, Mineral, Lubricating (Cup) Medium, purchased under Navy Department Specifications 14-G-1.
G	Naval Torpedo Station Tail Packing Compound, obtainable only by requisition to tenders, bases, or stations.
H	Light, Class 1, Forced-Feed Mineral Lubricating Oil, Navy Symbol 1100.
J	Light Rust-Preventive Compound, Polar Type; Grade III of BuShips Spec. (52-D-18) INTERIM of March 15, 1941.
K	Heavy Rust-Preventing Compound, Polar Type; Grade I of BuShips Spec. (52-C-18) INTERIM of March 15, 1941.
L	Gasket Sealing Wax (OS 2526).

4. Preliminary adjustments should be made with the torpedo resting on a truck or chocks, with the exercise head removed, located under a chain hoist.

5. Equipment, tools, and supplies required for use in making preliminary adjustments:

Equipment required

Torpedo truck or chocks
Hoisting strap (short)
Safety strap.
Test panel, SG 2348, or torpedo-testing set SG 5033
Two propeller locks
Pressure gage (portable)
Oil-filling funnel

Tools required

The tools required are listed after each step.

Supplies required

Lubricants and preservatives listed above.

6. The above material is given in allowance lists for all torpedo activities.

Chapter 7—Section 1

PRELIMINARY ADJUSTMENTS

Charge Air Flask

1. Place torpedo right-side-up on truck or chocks.

2. Put on propeller lock and starting-lever lock.

3. Remove water-compartment filling plug. (11)

4. Remove fuel-filling plug. (217, 74)

5. Remove charging valve plug and washer. (13-14)

6. Rotate starting-gear index spindle, in the direction of the arrow, to seat starting piston. (227-227A)

7. Open stop valve (Fig. 102). Make certain that air-flask blow valve is closed. (227-227A, 49)

8. Before installing charging line, tie wing nut down and blow air line free of moisture and foreign material.

9. Install charging line and safety strap (Fig. 103).

10. Charge air flask to 1000 p.s.i. pressure; if final adjustments are to follow, flask may be charged to 2800 p.s.i. pressure.

11. Close stop valve; bleed air from charging line; remove safety strap and charging line; and replace charging valve plug and washer. (227-227A, 13-14)

12. Test forward bulkhead for leaks, using oil (C).

Drain Air Flask—Forged Flask

13. Turn torpedo until nipple for blow valve is at its lowest point; crack blow valve and drain water from air flask; close blow valve and turn torpedo right-side-up. (49)

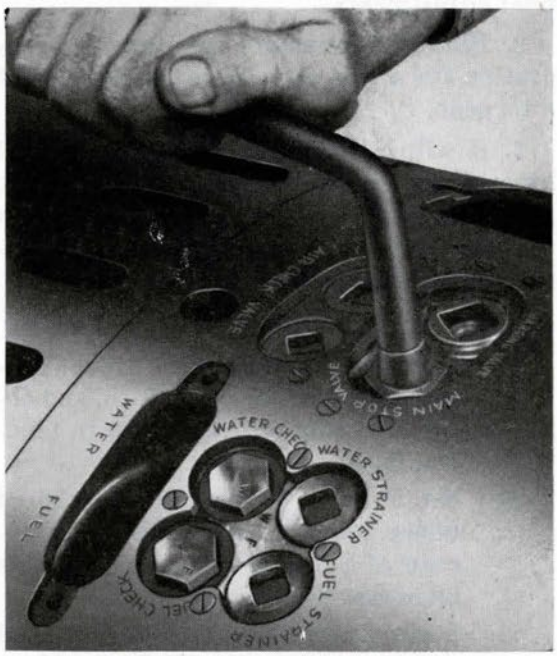

Figure 102

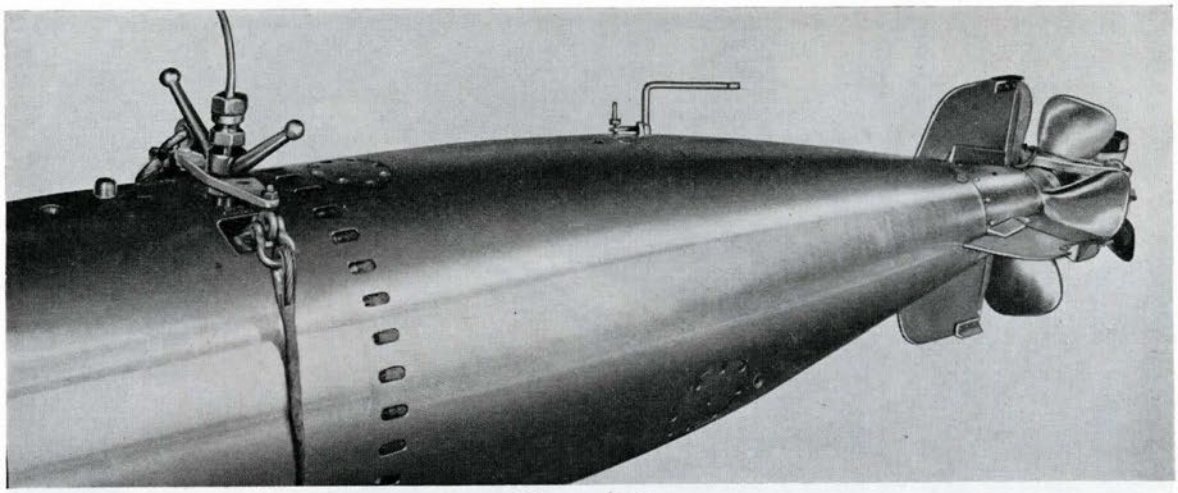

Figure 103

Drain Air Flask—Welded Flask

14. Turn torpedo bottom-side-up until the air vent in the top forward part of the air flask is at its lowest point; open air vent and drain water from air flask. Close air vent and turn torpedo right-side-up. **(400B)**

Oil and Grease

15. Remove plug and fill oil tanks with oil (B) (preferably warm). After filling, remove propeller lock; turn propellers by hand and note that oil pump takes suction as evidenced by the dropping of oil level in the filling hole. Refill oil tanks and replace plug. **(13-14)**

16. Remove after propeller sleeve assembly. Wipe bushings and bearing surfaces clean with rag; rub grease (G) on bushings and bearing surface on sleeve (Fig. 104). **(183)**

17. Remove grease-packing screw and washer from after propeller shaft. With hand grease gun, fill after propeller shaft with grease (G). Turn propellers at least three turns while greasing. Replace grease-packing screw and washer. **(184, 481, 481A)**

Note: Do not apply an excessive amount of grease, as it will cause torpedo to smoke while running.

18. Replace after propeller sleeve assembly and secure with lock nut. **(183)**

19. In torpedoes which do not have the improved tail lubricating system, remove grease plug from tail cone, fill tail bearing with grease (G), and replace grease plug, noting that it is proper plug (flat end). Turn propellers at least three turns while greasing. **(13-14, 481, 481B)**



Figure 104

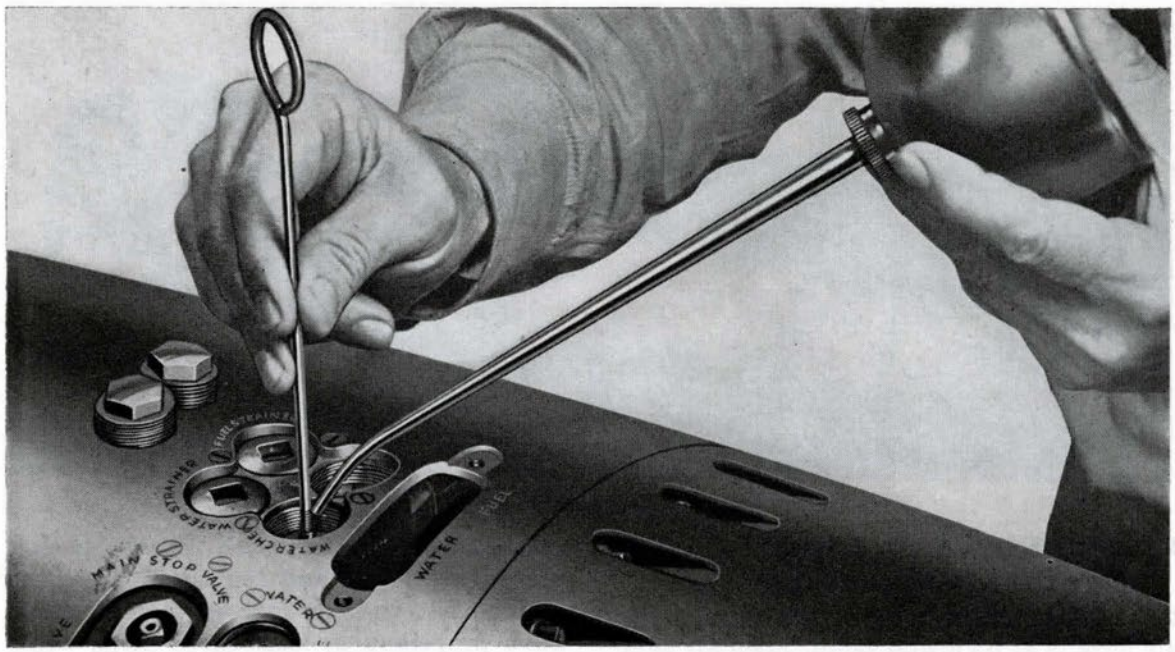

Figure 105

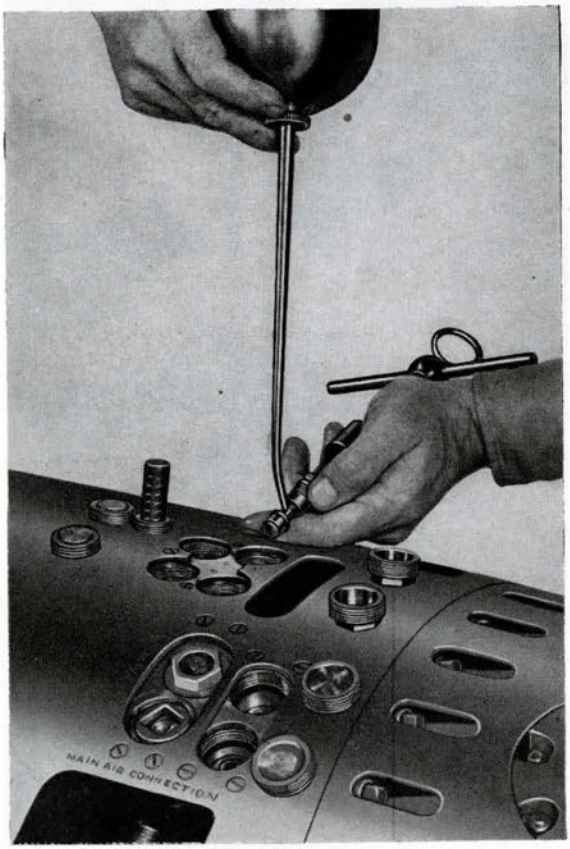

Figure 106

20. In torpedoes which do not have the improved tail lubricating system, remove grease plug from forward propeller, fill hub with grease (G), and replace grease plug. Turn propellers at least three turns while greasing. Replace propeller lock. **(40, 481, 481B)**

21. In torpedoes which have the improved tail lubricating system, remove grease plug from after propeller, fill grease shell (inside after propeller sleeve) with grease (G), and replace grease plug. Turn propellers at least three turns while greasing. Replace propeller lock. **(40, 481, 481B)**

22. Remove drain plugs in the afterbody and tail, and drain out excess oil, if any. Leave plugs out. **(13-14)**

Prepare Check Valves and Strainers

23. Remove plugs and washers from air check valve body and delivery check valve body; exercise and oil (C) check valves; replace plugs washers (Fig. 105). **(405, 406, 74)**

Note: If valves are sticky, it will be necessary to remove them and correct the trouble (Fig. 106).

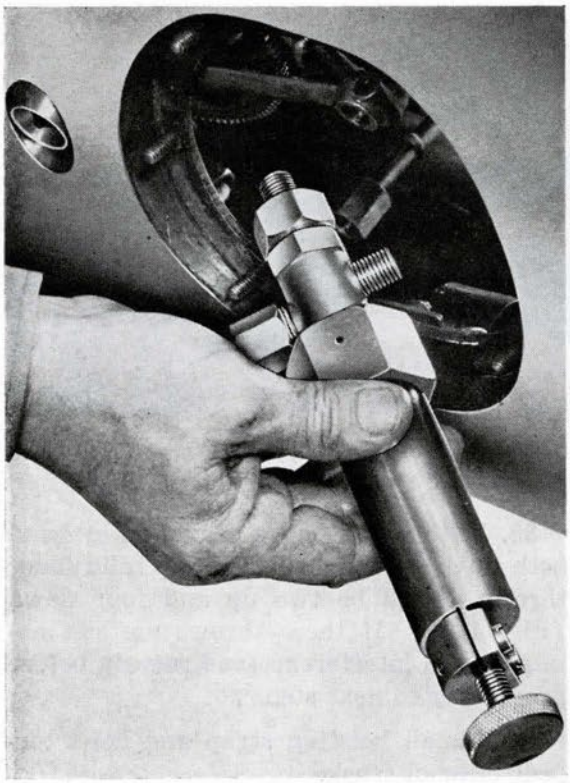

Figure 107

24. Remove plugs, washers, and fuel and water strainers. Wash strainers and blow dry with air. Note that mesh is clean. Replace strainers, washers, and plugs. **(405, 372A)**

Install Control Valve

25. Turn torpedo bottom-side-up. Remove hand-hole plates, gaskets, and port forward gyro index-gear assembly. **(200-441, 48, 72)**

26. Test and set control valve for the pressure indicated in the record book.

27. Install control valve in afterbody and connect pipes (Fig. 107). **(41, 155, 141A)**

Check and Adjust Depth Mechanism

28. Test atmospheric chamber for leaks, using test fixture; SG 2857:

(a) Remove plug from atmospheric chamber and install test connection with gage. **(11, 402)**

(b) Connect test pump; pump to 15 p.s.i. pressure and check for leaks (Fig. 108).

Note: The atmospheric chamber must hold 15 p.s.i. pressure for five minutes; if it does not, renew diaphragm and repeat test.

(c) Remove test pump and test connection. **(402)**

(d) Turn torpedo right-side-up.

29. Remove plug from air-strainer body and install adapter. **(12, 223, 377)**

30. Connect air from test panel, SG 2348, or test set, SG 5033, to adapter in air-strainer body. **(141A)**

31. Check alignment of depth rudders with zero lines.

32. With transportation screw in place; turn air on (450 p.s.i.) and note position of depth-engine valve connecting rod with respect to valve stop. Scribe mark on valve connecting rod should be in alignment with scribe mark on valve stop; if not, unclamp and adjust valve to that position.

Note: If valve has been adjusted, make certain that hole in knurled portion of valve connecting rod is horizontal.

33. With transportation screw in place, and air on, check neutral position of depth rudders. The neutral position should be one

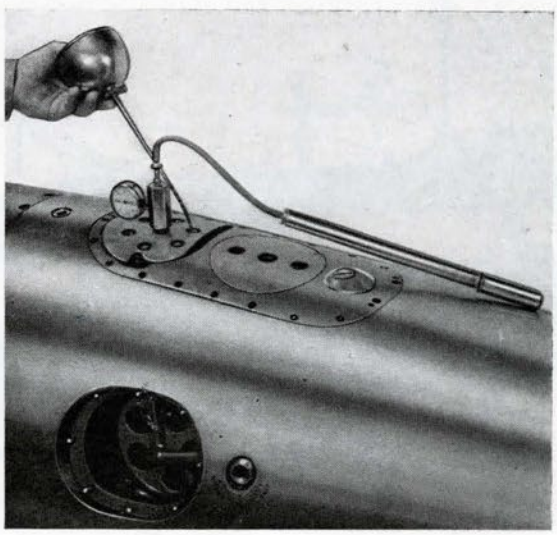

Figure 108

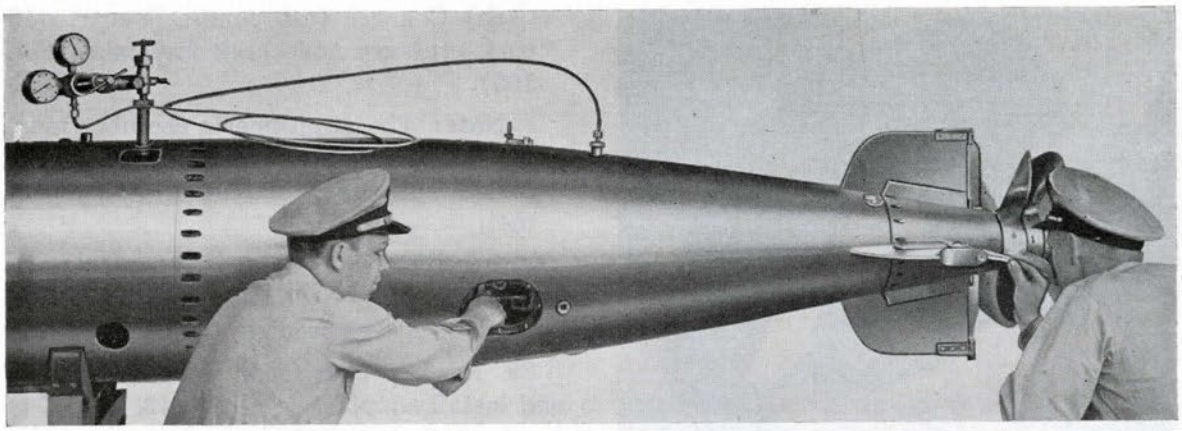

Figure 109

down. If neutral position is incorrect, loosen clamp screw in rudder-adjusting rod, remove connecting screw and turn rudder-adjusting eye in the direction desired. It will be noted that one-half turn is the minimum amount this eye can be turned for alignment with the forked end of the rudder-rod connection. One-half turn on the eye is equivalent to one-quarter of a graduation on the tail cone. After adjusting the eye, re-connect and clamp adjustment. **(49, 386)**

34. Remove transportation screw and install replacement screw. **(49)**

35. With air on, move pendulum by hand both ways against its stops. The full rudder throws should be two up and four down (Fig. 109). If these throws are not obtained, find interference and remedy before proceeding to next step.

36. Install hoisting strap and hoist torpedo clear of truck.

37. Install screw hook in diaphragm nut and attach 10-pound weight. **(411A)**

38. Place bevel protractor on the top center of air flask (not on guide stud) and level the torpedo.

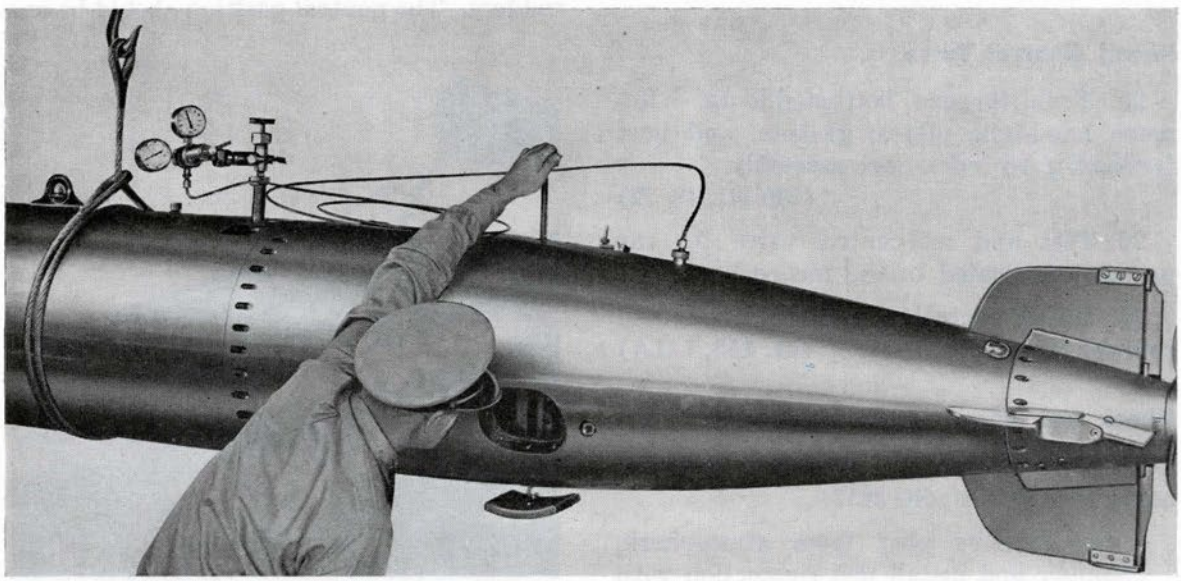

Figure 110

[redacted]

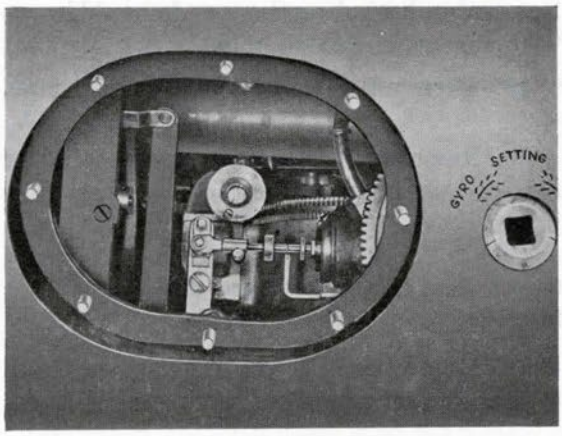

Figure 111

39. By turning the depth index spindle (Fig. 110), apply tension on the depth spring until the scribe mark on the depth-engine valve connecting rod is in alignment with the scribe mark on the valve stop (Fig. 111). Move the pendulum back and forth by hand and note that scribe marks line up when pendulum comes to rest.

40. If the depth-index dial does not read 10 feet when the valve is centered, disengage side gear spindle from socket; set depth index dial on 10 feet and re-engage spindle in socket. **(135A, 472)**

41. Verify neutral rudder throw with the weight attached and the torpedo level.

42. Test sensitiveness of pendulum by tilting torpedo (Fig. 112). The pendulum should start to move with not more than one-half degree of tilt up or down, and should have full travel with not more than 2½ degrees of tilt. Use bevel protractor to obtain the correct tilting angles for this test.

43. Remove weight and screw hook from diaphragm nut. **(411A)**

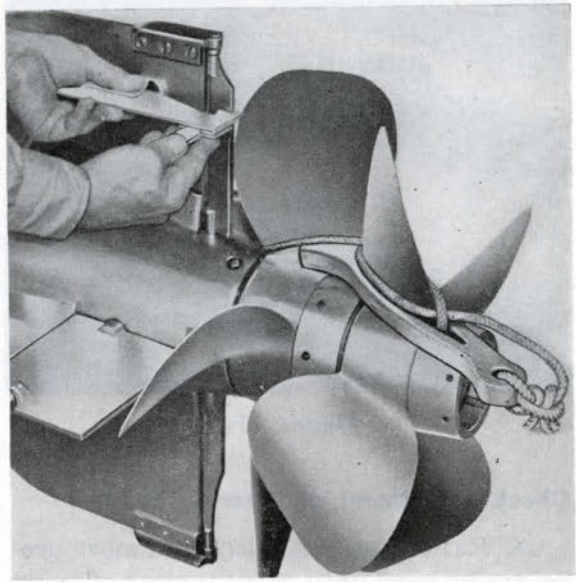

Figure 113

44. Replace access plug and washer in atmospheric chamber. **(11)**

45. Set depth-index dial on zero. **(135A)**

46. Remove replacement screw and replace transportation screw. **(49)**

47. Lower torpedo on truck.

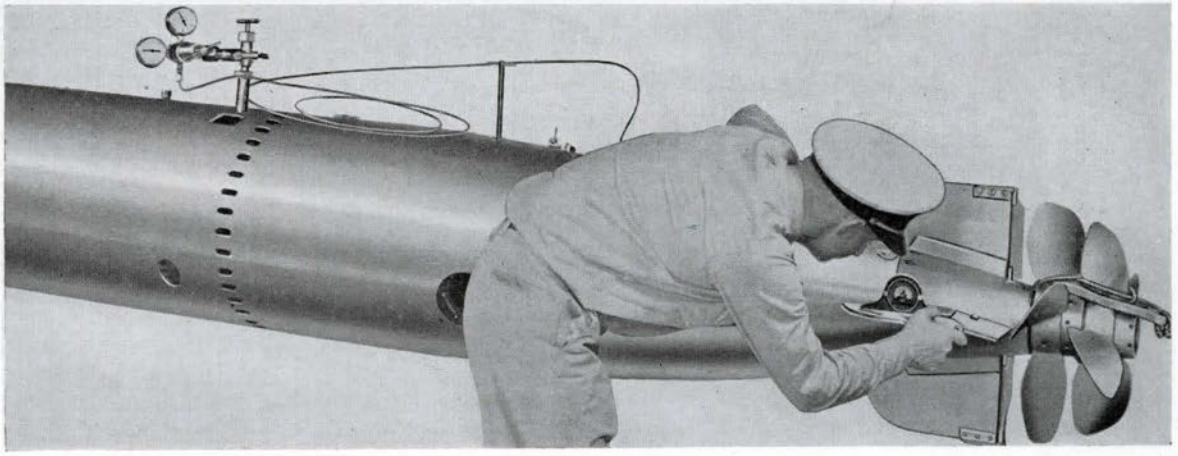

Figure 112



Figure 114

Check Adjustment of Steering Rudders

48. Remove propeller lock and move propellers by hand until pallet is clear of pallet pawls. Replace propeller lock. With air on engine, move the steering-engine valve in both directions by hand, recording the steering rudder throws with vernier scale (Fig. 113). The steering-rudder throws should be equal in both directions and should agree with throws in record book. **(44)**

49. Turn off air and remove test pipe. **(141A)**

50. Remove adapter and replace plug in air-strainer body, noting that washer is in place. **(377, 12)**

Check Functioning of Gyro and Gyro Mechanism in Torpedo

51. Move speed-change spindle from high to low several times and note ease of operation. Set spindle to low-speed position. (This step is not applicable to Torpedoes Mk 23 Type (Fig. 114). **(419)**

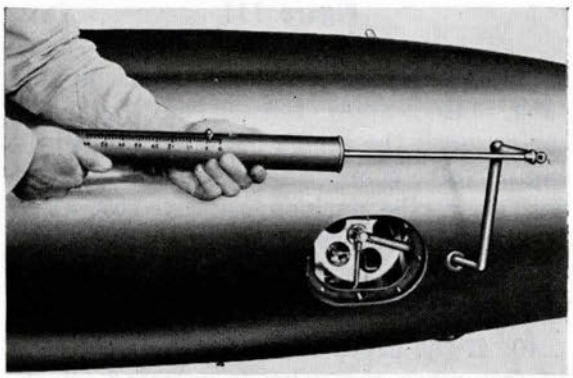

Figure 115

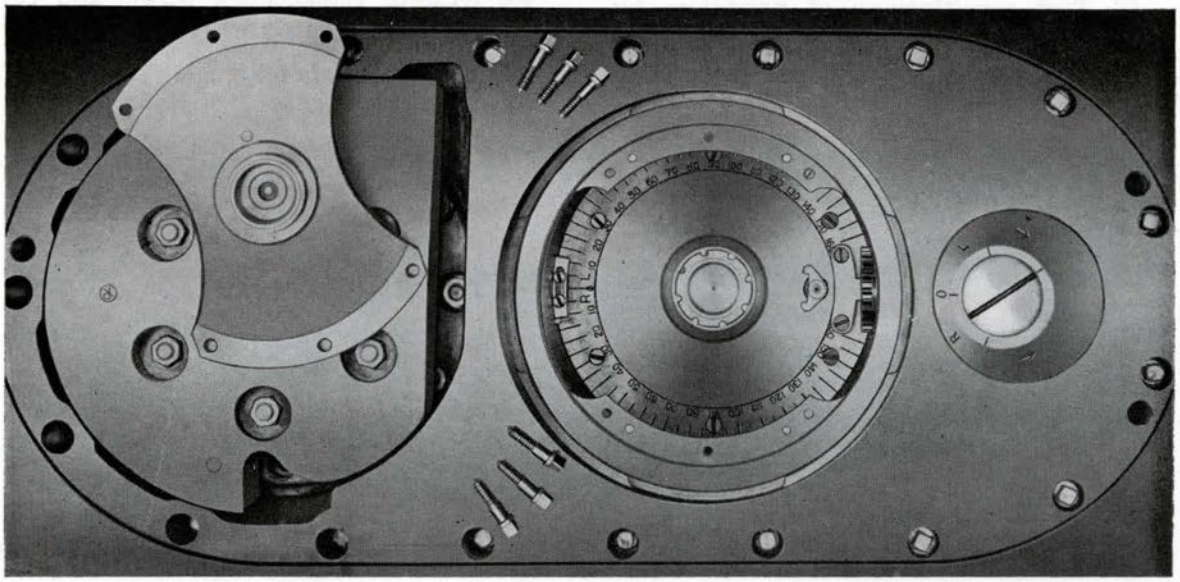

Figure 116

52. Replace water-compartment filling plug. (11)

53. Replace forward gyro index gear assembly. (444)

54. Check torque required to turn socket (Fig. 115). The torque should be not more than five foot-pounds. (227-227A, 98)

55. Turn torpedo bottom-side-up.

56. Remove gyro clamp-plate cover, gasket, and gyro bottom head. (13-14, 205A-246)

57. Turn angle-setting device extremely (160 degrees) to the left and right from the outside setting socket to insure that there is no interference. (444)

58. Check coincidence of zero in pot with the outside index (Fig. 116). It is essential that these correspond. (444)

59. Wipe the inside of the gyro pot dry with a clean cloth (without lint).

60. Remove propeller lock and turn propellers by hand to move pallet and cam pawls to extreme after position, away from the gyro (Fig. 116). Replace propeller lock.

61. Inspect and oil [two drops of oil (A)] gyro top bearing, using syringe furnished.

62. Lock and unlock spinning mechanism by hand and note smartness of action. (205A-246)

63. Inspect and install gyro, taking care not to damage extender in top bearing holder.

64. Inspect and oil [two drops of oil (A)] gyro bottom bearing. Install gyro bottom head with zero marks coinciding. (Note 1). (205A-246)

65. Replace drain plugs and washers in afterbody and tail. (13-14)

66. Turn torpedo right-side-up. (See **Note 2**, below.)

67. Lock and unlock gyro by hand. Note that centering pin releases freely and without a kick (Fig. 117). Grasp outer gimbal ring and, by lifting, note if there is any clearance between top and bottom bearings. If there is no clearance, the gyro may have been installed slightly canted and forced up against the side of the top bearing when setting up on the bottom head screws. (205A-246)

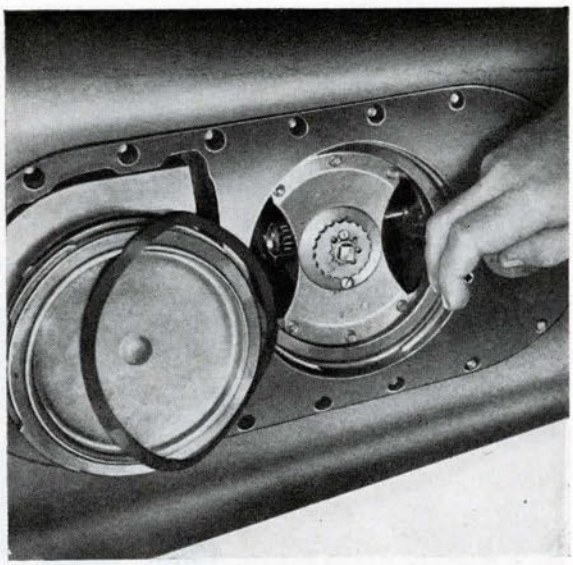

Figure 117

Note 1: By spinning the outer gimbal ring of the gyro while the bottom head is being installed, the gyro will align itself in the top and bottom bearings and prevent the condition described above.

Note 2: Turning the torpedo right-side-up to inspect the proper functioning of the centering pin in the spinning mechanism is absolutely necessary to insure the proper release of the gyro from the locked position. Checking the functioning of the centering pin with the torpedo bottom-side-up is incorrect procedure because in this position the gyro is not in proper alignment with the centering pin, and the latter cannot release without kicking the gyro.

68. Lock gyro and turn torpedo bottom-side-up. Check to see that hand trip lever is flush against the recess in the gyro-pot wall. If lever is not flush, gyro is not fully locked; therefore unlock gyro, turn the spinning gear one and one-half turns (clockwise viewed from aft) and lock again. The gyro should now be locked as evidenced by the hand trip lever being flush against the recess in the gyro-pot wall. Replace gyro clamp plate cover and gasket. Turn torpedo right-side-up. (205-246, 13-14)

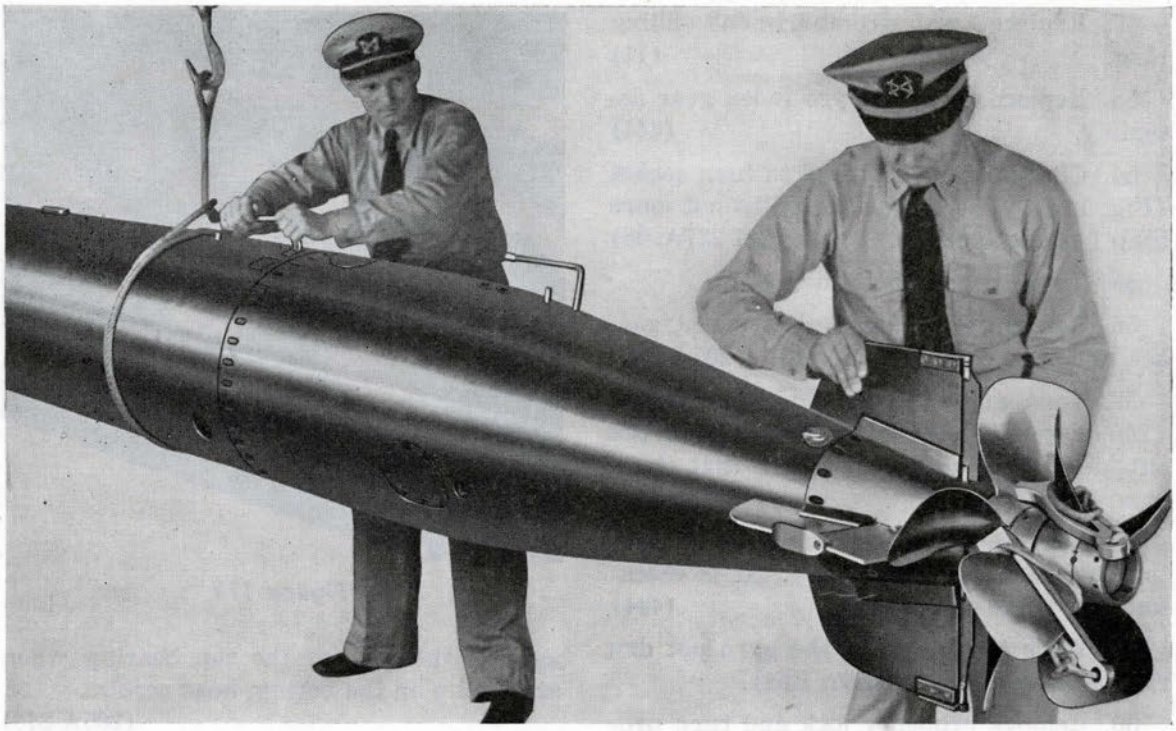

Figure 118

69. Place steering engine valve in the approximate mid-position by hand; remove propeller lock and turn propellers by hand, watching the steering-engine valve meanwhile; if the valve moves, the gyro top plate is not properly indexed for a straight shot. It should be centered by turning the outside setting socket. After centering, note discrepancies between the reference mark in the pot and the outside setting-socket index; report the discrepancy to the Torpedo Officer. (444)



Figure 119

Test Functionings of Depth and Gyro Mechanism with Gyro and Main Engine Running

70. Install dummy igniter and connect pipe. (391A, 438)

71. Secure two propeller locks on two opposite propeller blades.

72. Remove transportation screw and insert replacement screw. (49)

73. Hoist torpedo clear of truck.

74. Turn starting-gear index spindle past the "click" to seat starting piston. Keep tool on spindle for emergency use. (227-227A)

75. Remove lock from starting lever.

76. Trip starting lever by hand.

77. Open stop valve smartly, thus spinning gyro. Close stop valve (Fig. 118). (227-227A)

78. Remove both propeller locks.

Note: Place a guard around propellers. If no guard is available, caution personnel to stand clear of propellers.

79. Open stop valve sufficiently to run the main engine at moderate speed, and at the same time maintain sufficient pressure to actuate the depth and steering engines. **(227-227A)**

80. Swing torpedo in azimuth, noting movement of steering rudders to either side. Tilt torpedo up and down (Fig. 119). Depth rudders should move smoothly and get full throw.

81. Rotate starting-gear index spindle to seat starting piston, and note that air is cut off. **(227-227A)**

82. Close stop valve. **(227-227A)**

83. Replace one propeller lock and starting-lever lock.

84. Remove replacement screw and install transportation screw. **(49)**

85. Lower torpedo into truck or chocks and turn bottom-side-up.

86. Permit the gyro to run down by itself.

87. Remove gyro clamp-plate cover and gasket. **(13-14)**

88. Remove gyro bottom head. **(205A-246)**

89. Remove gyro; clean thoroughly; oil (A) and replace in gyro container.

90. Replace gyro bottom head.

91. Replace gyro clamp-plate cover and gasket. **(13-14)**

92. Inspect water intake and discharge scoops for after bulkhead bearing. Note that scoops are free from grease or dirt to permit free circulation. **(40)**

93. Turn torpedo right-side-up.

94. Remove water-compartment filling plug, replace fuel filling plug, and replace water-compartment filling plug. **(11, 217, 74)**

95. Remove forward gyro index-gear assembly for access to control valve. **(72)**

96. Disconnect and remove control valve. Take compression off control-valve spring, and return valve to stowage box. **(141A, 41, 155, 40)**

97. Replace forward gyro-index gear assembly. **(444)**

98. Replace hand-hole plates and gaskets. **(48)**

The above steps will complete the Preliminary Adjustments and place the torpedo in readiness for Final Adjustments preparatory to firing, except for the exercise head, the adjustments of which are described under its own heading.

Chapter 7—Section 2

LEAK-METER TEST OF TORPEDO

Note 1: The submarine torpedo officer should normally test torpedoes received from overhaul with the leak meter (SG 4566), both as a receiving inspection and to determine the length of time each torpedo can be safely exposed to sea pressures at different depths. Normally he will place the tightest torpedoes in those tubes which will be flooded for the longest periods.

Note 2: The vacuum gage of leak meter should not be altered in any way unless it is extremely inaccurate. As a test, the gage is sufficiently accurate if it will register within an inch or two of 28 inches of vacuum when the set is working properly. In order to prevent damage to gage, always relieve vacuum slowly to allow gage hand to return slowly to its resting point.

1. Make certain that stop valve is closed, starting lever lock is in place, and propeller lock is on. **(227-227A)**

2. Connect ordinary air hose from 100 to 600 p.s.i. air source to the ¼-inch female pipe-thread inlet on bottom of leak meter case.

3. Remove afterbody drain plug and

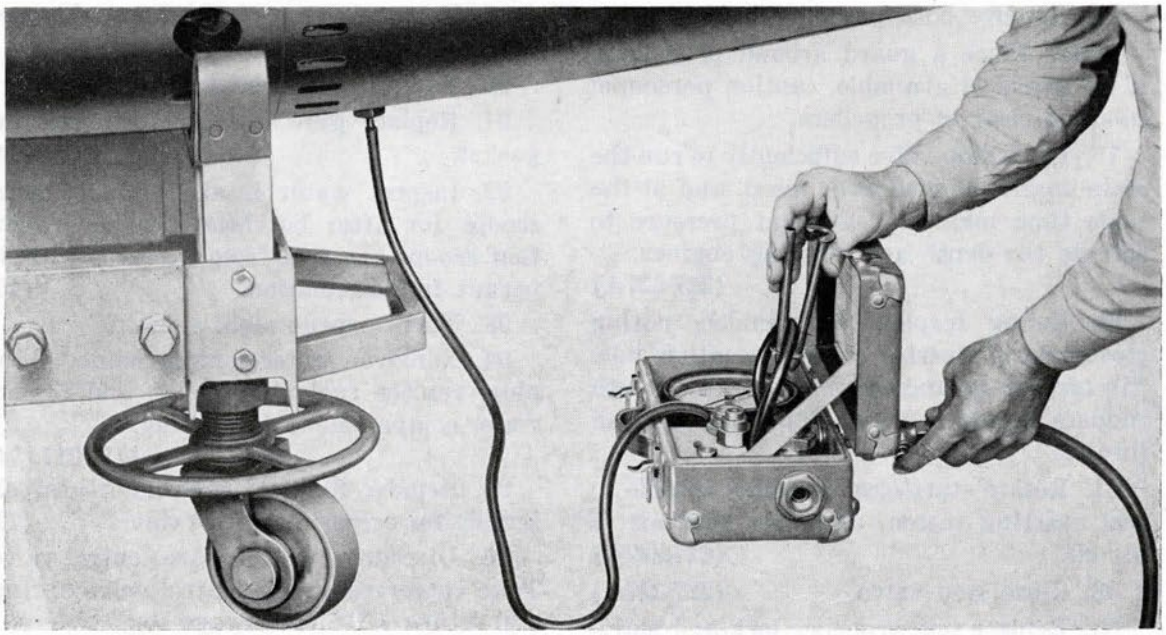

Figure 120

screw in fitting furnished with set. Slip end of Koroseal tubing over nipple on fitting. **(13-14, 191)**

4. Place pinchcock on Koroseal tubing between gage and fitting in afterbody, and turn on air. When gage registers 25 inches of vacuum, indicating that all connections on test set are tight, remove pinchcock.

5. Continue operation of test set until vacuum gage registers 22 to 25 inches of vacuum, and place pinchcock on short length of Koroseal tubing connected to ejector (Fig. 120). Turn off air.

Note: If vacuum will not rise to this range, extremely bad leakage is indicated.

6. Wait five minutes and read vacuum gage, tapping glass of gage with fingers. Wait 15 more minutes and read gage again, tapping glass of gage with fingers. Afterbody is adequately tight if vacuum falls ½-inch or less during this 15-minute period.

7. After test, remove pinchcock (slowly); remove Koroseal tubing from nipple in afterbody fitting; remove fitting and replace drain plug, noting that washer is in place. **(191, 13-14)**

Chapter 7—Section 3

TEST AND INSTALLATION OF EXERCISE HEAD

1. Inspect water discharge-valve parts:

(a) Remove holding nuts, spring plate, spring and valve. **(48)**

(b) Inspect valve seat, leather washer, and spring. Seat must be clean and leather washer must be in good condition. Renew parts as necessary.

(c) Apply grease (E) to leather washer, valve, seat, and studs in flange.

(d) Replace valve, spring, and spring plate. Secure assembly with holding nuts. Tighten nuts evenly. **(48)**

(e) Check action of valve by pushing open with rod several times. Valve should close by spring action alone.

2. Visually inspect air-releasing mechanism spring:

(a) Remove adjusting nut-cap and

washer, adjusting-nut keep screw, adjusting nut, and spring. **(141A, 41, 18)**

(b) Thoroughly clean and inspect spring. Renew spring if in doubt about its condition.

(c) Replace spring, adjusting nut, keep screw, washer, and adjusting-nut cap. **(18, 41, 141A)**

3. Check to see that all holding nuts for exercise head bulkhead are tight. **(48)**

4. Connect nipple in bulkhead to source of high-pressure air (General Use Test Panel, SG 2348, or Testing Set, SG 5033. **(141A)**

5. Hold forward end of air-releasing pipe clear of head; turn on air-line valve to deliver about 600 p.s.i. pressure; and note flow of air through pipe. If it is suspected that restrictions are present in the air-releasing pipe, they must be located and remedied. Turn off air.

6. Blank off forward end of air-releasing pipe. **(141A, 18)**

7. Fill exercise head with liquid solution, and immerse end of air releasing pipe.

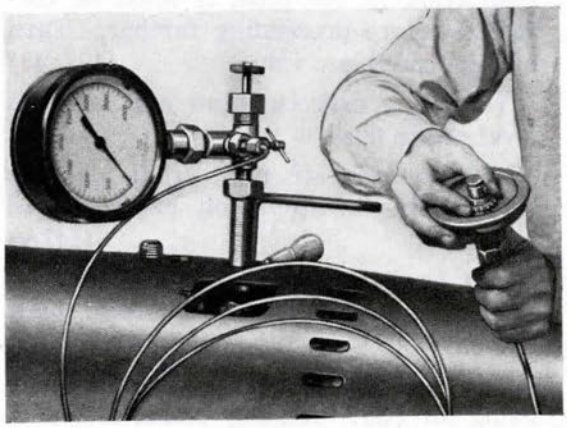

Figure 121

Note: For information on liquid solutions, see OD 3837.

8. Crack air-line valve and gradually build up pressure in air-releasing pipe to 2800 p.s.i. Bubbles will indicate leaks. All leaks must be located and remedied. Turn off air and bleed air line. Remove blank from end of air-releasing pipe and disconnect test pipe from nipple on exercise-head bulkhead. **(141A, 18)**

9. Calibrate air-releasing mechanism:

(a) Connect test pipe to air-releasing mechanism. **(141A, 18)**

(b) Remove keep screw and turn adjusting nut to approximate proper compression on spring (Fig. 121) **(41, 18)**

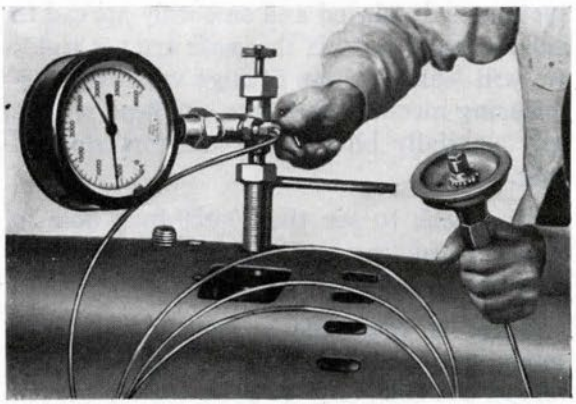

Figure 122

(c) Cock mechanism (Mk 2 only; Mk 3 cocks automatically when air is turned on. **(200-441)**

Caution: When using the cocking tool, be certain to pull tool straight out with respect to mechanism. A side pull may bend the stem and prevent the valve from operating or cause the valve to leak. Hold valve on seat with cocking tool while turning on air.

(d) Turn on air and turn adjusting nut until mechanism blows at 600 p.s.i. (Fig. 122). Turn off air. Replace keep screw. **(18, 41)**

(e) Connect mechanism to pipe in exercise head. **(141A, 18)**

(f) Re-connect test pipe to nipple on exercise-head bulkhead. **(141A)**

10. Cock mechanism (Mk 2 only); open air-line valve to deliver about 1000 p.s.i. pressure; and test air-releasing mechanism and pipe connection for leaks by lowering mechanism into water or solution in head. All leaks must be located and remedied. **(200-441)**

11. With air still on and mechanism

cocked, lower mechanism into flange, noting that a good gasket is in place. Install cover and secure by setting up evenly on nuts. (48)

Note: It is particularly important when preparing exercise heads for firing that the leather gaskets under the air-releasing mechanism, torch case, and torpedo headlight are in good condition, free of hard spots, evenly placed and smoothly spread to make a tight seat. If the seats are not tight, air will leak by these fittings when the air-releasing mechanism blows, the head will be only partially blown, and the torpedo will sink.

12. Check to see that 0.020-inch hole in top of adjusting-nut cap on air-releasing mechanism is clear.

Note: If this hole is clogged and if a small leak by the air-releasing valve develops, the head may be prematurely blown.

13. Install torch case in its flange over a good gasket. If using calcium phosphide torch, visually inspect torch for pin holes around soldered seams. If none are present, drop torch into torch case with ring and tab facing upward. Replace cover and secure with nuts. Tighten nuts evenly. (48)

14. If using headlight, install it as follows:

Note: If headlight or D & R are not used, install gasket, blanking plate, and cover.

(a) Remove casing from headlight and remove small square of fibre from between contact points on switch.

(b) Test switch mechanism by striking the after side of the headlight with the hand to see if lamp lights.

(c) Reset switch to the OFF position by pushing the switch lever with one finger through the elongated slot in the headlight body.

(d) Replace casing on headlight and screw up tight.

(e) Install headlight in its flange over a good gasket; replace cover and secure with nuts. Tighten nuts evenly (48).

Note: Headlight should be located in its flange so that the side of the headlight marked "Tube Aft Firing" is facing aft.

15. Test exercise head for leaks and functioning of its mechanisms:

(a) Place a bucket beneath the water discharge valve to catch discharged water.

(b) Turn off air to air-releasing mechanism; open vent in air line; and allow air to bleed down. Note the pressure at which the head blows. Head should blow at 600 p.s.i.

(c) When head starts to blow, note that water-discharge valve works properly and watch all joints for possible leaks as indicated by spurts of water. Locate and remedy all leaks.

(d) After air line bleeds down to zero, remove test pipe from nipple in bulkhead. (141A)

16. Join exercise head to air flask:

(a) Connect air pipe to nipple on air-flask blow valve only. Open air-flask blow valve and note flow of air through pipe. If it is suspected that there is a restriction in the pipe, it must be corrected before proceeding farther. Turn off air-flask blow valve. (404, 49)

(b) Sling exercise head and hoist to level of air flask.

(c) Connect air pipe from air-flask blow valve to nipple on exercise-head bulkhead. (141A)

(d) Cock air-releasing mechanism (Mk 2 only) and open air-flask blow valve. (49)

(e) Test air-pipe connections for leaks, using oil (C). Remedy leaks, if found.

(f) Wipe air flask and head joint with oil (D); join head to flask and secure with joint screws. (49)

Note: When joining head to flask, exercise care not to crush air pipe.

17. Turn torpedo bottom-side-up; remove drain plug; replenish liquid; and replace drain plug, noting that washer is in place. Turn torpedo right-side-up. (13-14)

Chapter 7—Section 4

FINAL ADJUSTMENTS AND FINAL PREPARATION FOR FIRING

1. Final adjustments are made in preparation for a run of the torpedo.

2. Equipment, tools, and supplies required for the final adjustments are listed below:

Hoisting strap (short)
Safety strap
Propeller lock
Fuel-filling funnel
Oil-filling funnel
Ready tools (numbers of which are listed after each step)
Gyro oil (A)
Hot running torpedo oil (B) [As alternate use (H).]
Light lubricating oil (C)
Compounded steam-cylinder oil (D)
Petrolatum (E)
Grease (F)
Tail-packing compound (G)
Alcohol
Water supply
Tackiwax (if using oil-type exhaust valves)
Brush for tackiwax

FINAL ADJUSTMENTS

1. Note that stop valve is closed, starting lever lock is in place, and propeller lock is on. **(227-227A)**

Oil and Grease

2. Remove plug and fill oil tanks with oil (B) (preferably warm). After filling, remove propeller lock, turn propellers by hand, and note that oil pump takes suction as evidenced by the dropping of oil level in the filling hole. Refill oil tanks and replace plug. **(13-14)**

3. Remove after propeller-sleeve assembly. Wipe bushings and bearing surfaces clean with rag; rub grease (G) on bushings and bearing surface on sleeve. **(183)**

4. Remove grease-packing screw and washer from after propeller shaft. With hand grease gun, fill after propeller shaft with grease (G). Turn propellers at least three turns while greasing. Replace grease-packing screw and washer. **(184, 481, 481A)**

Note: Do not apply an excessive amount of grease, as it will cause torpedo to smoke while running.

5. Replace after propeller-sleeve assembly and secure with lock nut. **(183)**

6. In torpedoes which do not have the improved tail lubricating system, remove grease plug from tail cone, fill tail bearing with grease (G), and replace grease plug, noting that it is proper plug (flat end). Turn propellers at least three turns while greasing. **(13-14, 481, 481B)**

7. In torpedoes which do not have the improved tail lubricating system, remove grease plug from forward propeller, fill hub with grease (G), and replace grease plug. Turn propellers at least three turns while greasing. Replace propeller lock. **(40, 481, 481B)**

8. In torpedoes which have the improved tail lubricating system, remove grease plug from after propeller, fill grease shell (inside after propeller sleeve) with grease (G), and replace grease plug. Turn propellers at least three turns while greasing. Replace propeller lock. **(40, 481, 481B)**

9. Remove drain plugs in the afterbody and tail, and drain out excess oil, if any. Replace plugs. **(13-14)**

Check Starting Gear

10. Remove port hand hole-plate and forward gyro index gear assembly. **(48, 200-441, 72)**

11. Remove starting-lever lock and rotate starting-gear index spindle one complete turn in the direction indicated by arrow and stop with the index pointer on START. Note that there is enough clearance (0.010 inch) between the piston lever and the starting-piston stem. **(227-227A, WE2A)**

12. Replace starting-lever lock.

Install Control Valve

13. Test control valve in accordance with

instructions given in Chapter 8, and set to pressure as given in record book.

14. Install control valve and secure. (155, 41)

15. Connect air pipe from manifold to control valve. (141A)

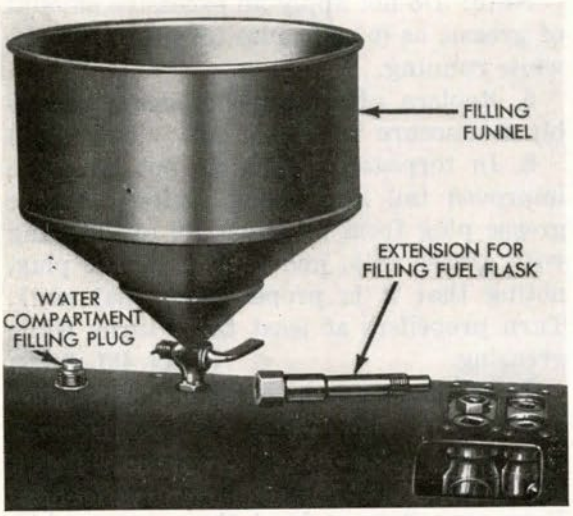

Figure 123

16. Connect air pipe from control valve to air-strainer body. (141A)

Charge Air Flask

17. Remove water-compartment filling plug. (11)

18. Remove fuel filling plug. (217, 74)

19. Remove charging valve plug and washer. (13-14)

20. Open stop valve. Make certain that air-flask blow valve is closed. (227-227A, 49)

21. Before installing charging line, tie wing-nut down and blow air line free of moisture and foreign material.

22. Install charging line and safety strap.

23. Charge air flask to 2800 p.s.i.

24. Close stop valve; bleed air from charging line; remove safety strap and charging line; and replace charging valve plug and washer. (227-227A, 13-14)

25. Crack stop valve one-half turn. (227-227A)

Prepare Check Valves and Strainers

26. Remove plugs and washers from air check-valve body and delivery check-valve body; exercise and oil (C) check valves; replace plugs and washers. (405, 406, 74)

27. Remove plugs, washers, and fuel and water strainers. Wash strainers and blow dry with air. Note that mesh is clean. Replace strainers, washers, and plugs. (408, 372A)

Speed Setting

28. Set speed-change mechanism. (This step is not applicable to Torpedoes 23 Type.) (419)

Fill Fuel and Water Compartments

29. Fill fuel flask. Use filling funnel.

30. Replace fuel filling plug. (74, 217)

31. Fill water compartment. Use filling funnel (Fig. 123).

32. Replace water-compartment filling plug, noting that washer under plug is in place. (11)

Drain Combustion Flask

33. Disconnect pipe and remove dummy igniter. (438, 391A)

34. Turn torpedo to port; drain combustion flask; and turn torpedo bottom-side-up.

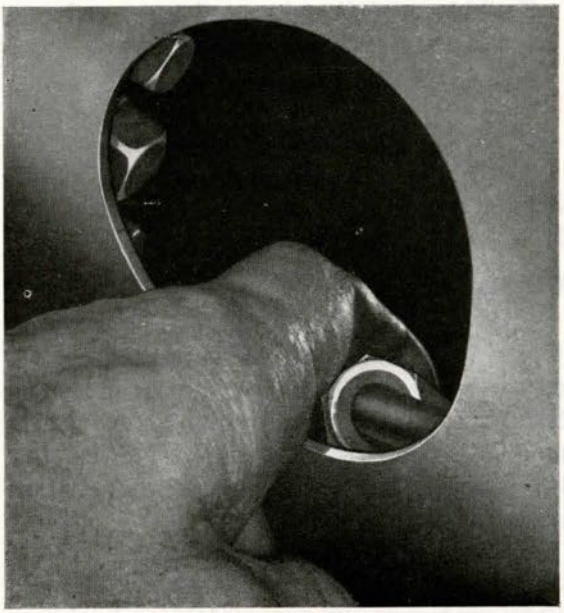

Figure 124

Note: Keep finger over end of igniter pipe, while draining combustion flask, to prevent liquid from entering pipe (Fig. 124).

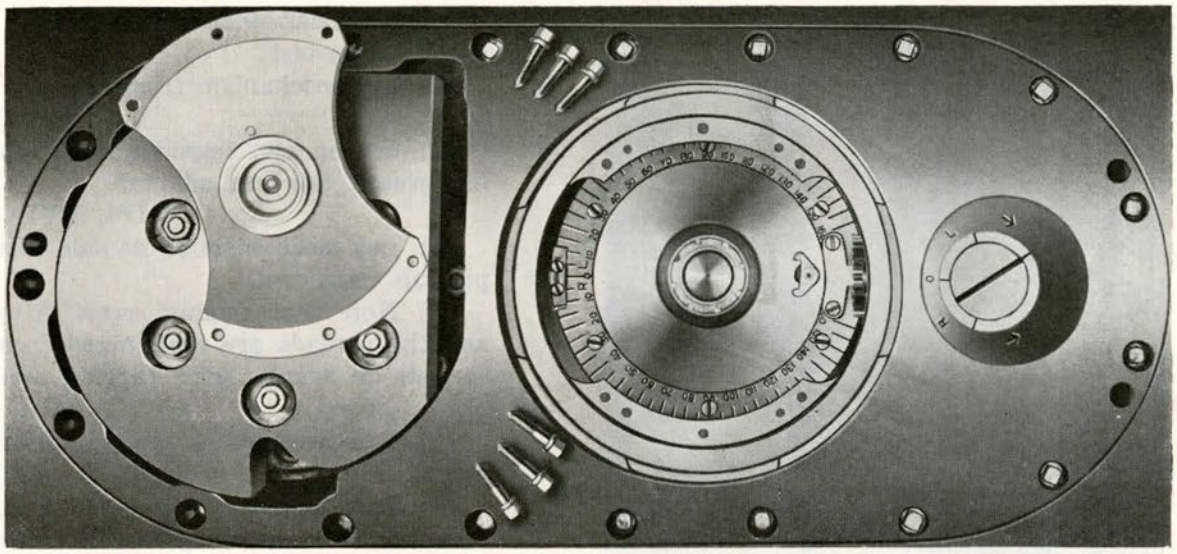

Figure 125

Install Gyro

35. Remove gyro clamp-plate cover and gasket. **(13-14)**

36. Remove gyro bottom head (Fig. 125). **(205A-246)**

37. Replace forward gyro index gear assembly. **(444)**

38. Note that gyro top plate is exactly on zero and check with outside side-setting socket, which should also indicate zero.

39. Wipe inside of the gyro pot dry with a clean cloth (without lint).

40. Remove propeller lock and turn propellers by hand to move pallet and cam pawls to extreme after position, away from the gyro. Replace propeller lock.

41. Inspect and oil [two drops of oil (A)] gyro top bearing, using syringe furnished.

42. Lock and unlock spinning mechanism by hand and note smartness of action. **(205A-246)**

43. Inspect and install gyro, taking care not to damage extender in top bearing holder.

44. Inspect and oil [two drops of oil (A)] gyro bottom bearing. Install gyro bottom head with zero marks coinciding. Turn torpedo right-side-up. **(205A-246)**

Note: It is good practice to cause gyro to revolve on its upper bearing when installing bottom head, thus making certain that balls and bottom bearing are lined up.

45. Lock and unlock gyro by hand. Note that centering pin releases freely and without a kick (see **Note 2** following step 67 of "Preliminary Adjustments.") **(205A-246)**

46. Turn torpedo bottom-side-up and lock gyro (Fig. 126). Check to see that hand trip lever is flush against the recess in the gyro-pot wall. Again note that gyro top plate is set on zero. **(205A-246)**

47. Install gyro clamp-plate cover and gasket. Turn torpedo right-side-up. **(13-14)**

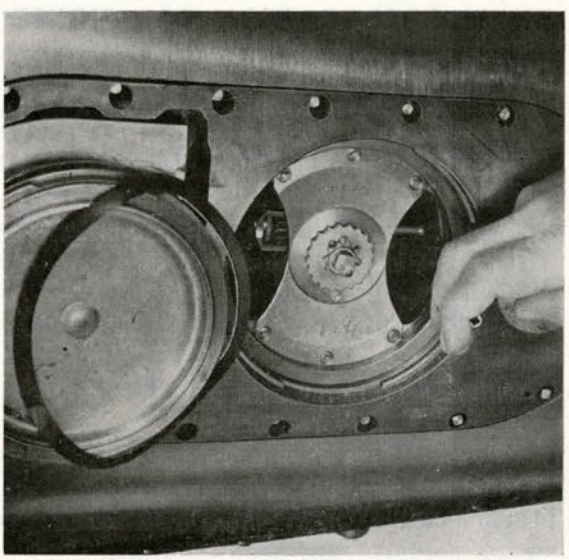

Figure 126

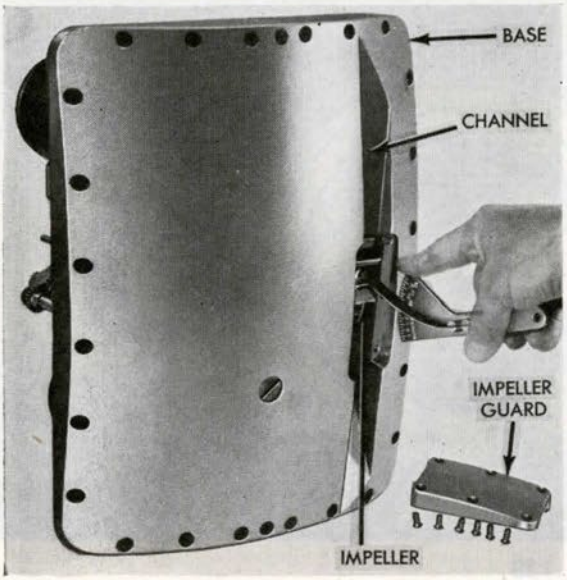

Figure 127

48. Replace gasket and hand-hole plate, setting up evenly on the holding nuts. (48)

49. Check tightness of joint screws in afterbody and tail. (386, 49)

50. Check lock nut for after propeller sleeve. (183)

Prepare Depth Mechanism

51. Remove transportation screw. (49)

52. Insert replacement screw with washer in place. (49)

53. Set depth index. (135A)

FINAL PREPARATION FOR FIRING

54. Install war head:

(a) Remove steel protecting ring. (49)

(b) Clean joint ring and coat with oil (D).

(c) Attach war head to air flask with joint screws. (49)

55. Turn torpedo bottom-side-up.

56. Remove cover from exploder-mechanism casing. (49 or 456)

57. Thoroughly clean and dry exploder-mechanism casing.

58. Note that the impact switch has been previously fitted to the war head and that proper clearance (0.063 inch) between switch contacts has been obtained. (WE2A)

59. Test Exploder-Mechanism Mk 6-5:

(a) Friction test:

(1) Lift mechanism from box. (MF2)

(2) Grease (F) impeller shaft, using grease gun and adapter. (MF1, MF1A)

(3) Lay mechanism on its side with pick-up coil down.

(4) Note that arming screw is up and the threads are disengaged from threads on arming gear (armed position).

(5) Remove screws and impeller guard. (41)

(6) Turn impeller (less than a turn) to break adhesion of grease in bearing, and with impeller test tool on tip of one impeller blade, exert enough pressure to just start impeller (Fig. 127). The force required should be 22 to 24 ounces. (MF7)

Note: To obtain proper friction, it may be necessary to adjust the impeller gland nut.

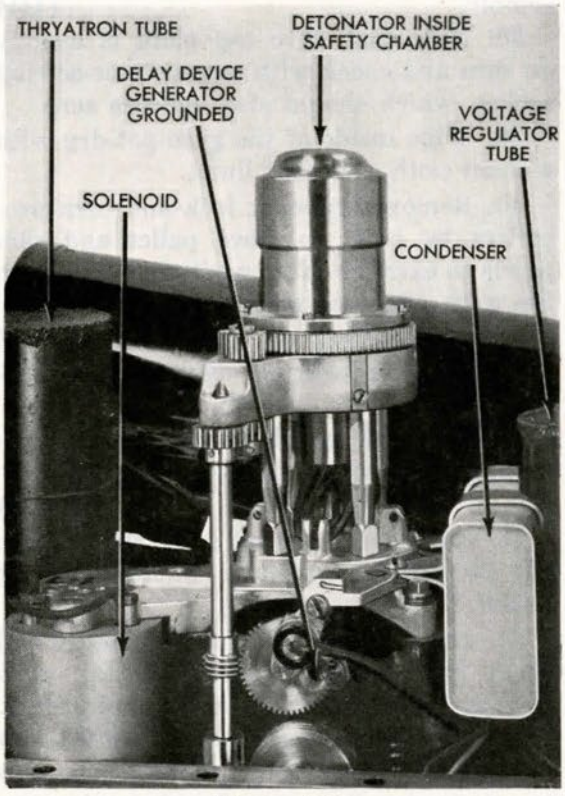

Figure 128

(7) Replace impeller guard and holding screws. (41)

(b) Set delay-device worm wheel back to starting position, noting that contact button is against worm wheel and that wire to delay wheel is of sufficient length to permit full engagement of worm wheel and worm. Replace pin in delay-wheel arm and bracket to hold wheel in engaged position (Fig. 128).

Caution: Delay wheel, wire, contact button and insulation bushing should be in perfect condition, free from dirt, oil, grease, or corrosion.

60. Ascertain that core-rod plug is tight. (388)

61. Install Tetryl Booster Mk 2 in casing:

(a) Remove booster from container and replace container in stowage space.

(b) Install booster in casing with recess for detonator out.

(c) Note that booster is a loose fit in the casing, so that it will rest on the safety chamber when torpedo is turned right-side-up.

62. Install Detonator Mk 9:

(a) Loosen set screw and remove idler gear with pin, or disengage spring idler gear, if installed; line up scribe mark on arming screw and turn arming gear with arming screw disengaged from arming gear (in armed position); replace idler gear, pin, and set screw or reengage spring idler gear. (37)

(b) Thread wires from detonator through hole in arming screw.

(c) Install safety chamber and detonator on arming gear, noting that guide pins on arming screw slide into detonator holder. Secure safety chamber with holding screws. (41)

(d) Separate ends of detonator leads and connect them to two terminals on the bakelite strip attached to the firing-mechanism base. These leads may be connected to either post. (435)

(e) After connecting, coat wire ends and terminals with three coats of insulating varnish or shellac.

63. Install exploder mechanism in war head:

(a) Carefully examine gasket; place it in position and install guide screws in the war-head flange to hold gasket in place while guiding exploder to its seat. (497, 41)

(b) Connect leads from exploder mechanism to impact switch by threading the ends of the leads over the top of

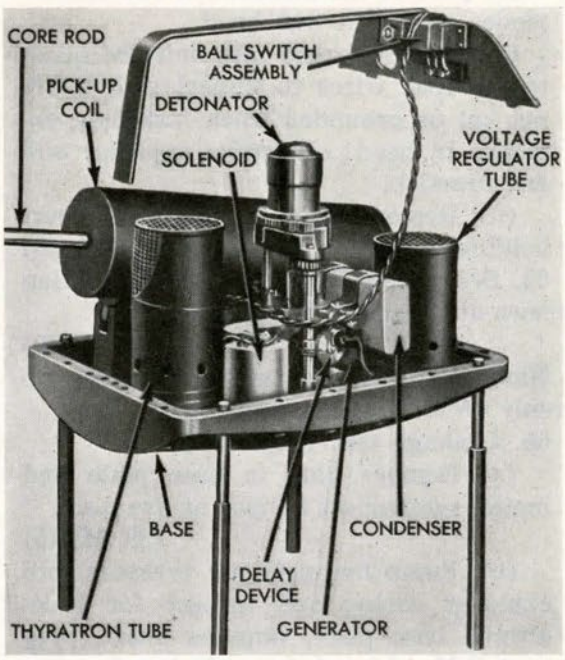

Figure 129

the switch and through the base of the switch, and then secure leads to terminals on bakelite block (Fig. 129). (435)

Note: These leads may be connected to either post.

(c) Coat terminals and exposed wires at terminals with three coats of insulating varnish or shellac. Tie leads between exploder mechanism and impact switch to inboard side of the pick-up coil, near pick-up-coil junction box, with string.

(d) Place cover over impact switch and secure with holding screw. (41)

(e) Screw lifting screws in place from the outside of exploder base, noting that they are not screwed in too far, so the ends will extend above gasket seat, thus damaging gasket when installing exploder. Lift exploder over casing. (MF2)

(f) Install impact switch and bracket assembly in war head.

(g) Carefully slide exploder mechanism into place, noting that it fits snugly on its flange in war head and that no binding exists, such as may occur if the flexible leads are jammed between exploder casing and pick-up coil or any other part of the mechanism and the exploder cavity in war head.

Caution: Extreme care must be taken to see that wires to impact switch are not cut or grounded when installing exploder in head; otherwise exploder will not function.

(h) Remove guide screws and insert holding screws. **(41, 497, 49)**

64. Set up evenly on base-plate holding screws and remove lifting screws. **(49, MF2)**

Note: Care should be taken to set up evenly on all holding screws.

65. Leakage test (Fig. 130):

(a) Remove plug in base plate and install adapter set to open at five p.s.i. **(39, MF15)**

(b) Pump five p.s.i. air pressure into exploder casing and inspect for leaks around base plate, impeller shaft, plug in A.C.M. piston hole, and plug for core rod with soapy water.

(c) Remove test set and replace plug. **(MF15, 39)**

66. Turn torpedo right side-up.

67. Remove starting lever lock and load torpedo in tube carefully. **Do not jam against stop.**

68. Note that tube tripping latch works freely and is in proper position. Close tube door.

69. Check buffer clearance (readjust as necessary).

70. Engage gyro angle-setting spindles.

71. Set gyro to an arbitrary angle (preferably 45 degrees or over) in either direction, making note of same.

72. Engage depth-setting spindle and set an arbitrary depth on torpedo, making note of same.

73. Disengage tube-setting spindles.

74. Haul torpedo out to afterbody joint ring, or as necessary to complete final preparation for firing.

75. Remove gyro clamp-plate cover and note angle on gyro index in the pot. This angle should correspond to the angle setting on tube. **(13-14)**

76. Reset gyro index in pot to zero, noting that side setting sockets on both sides read zero. **(444)**

77. Reset gyro angle-setting mechanism on tube on zero.

78. Replace gyro clamp-plate cover and gasket. **(13-14)**

79. Note reading on depth-index dial. It should correspond with reading on tube.

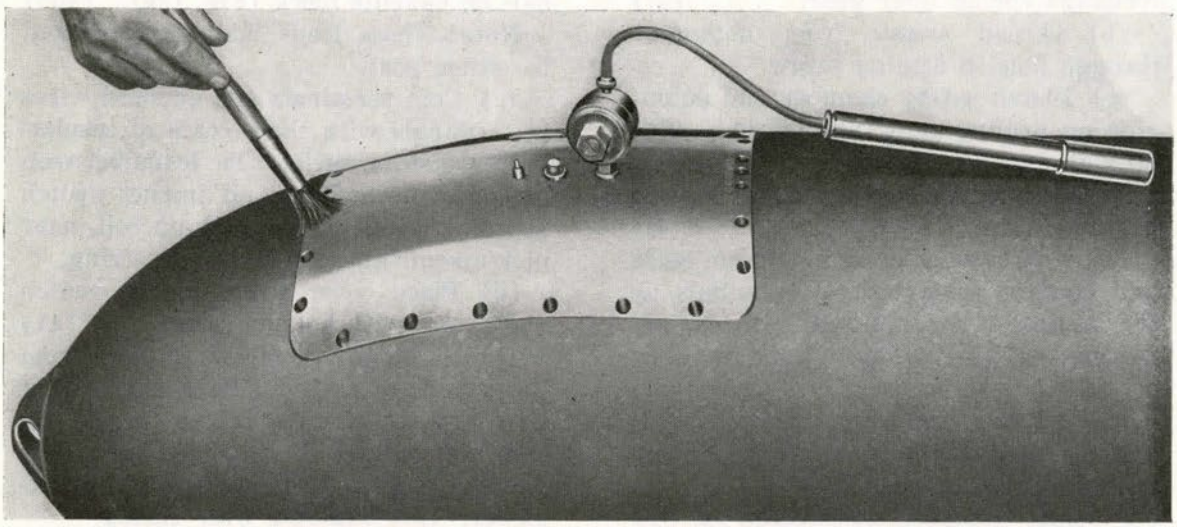

Figure 130

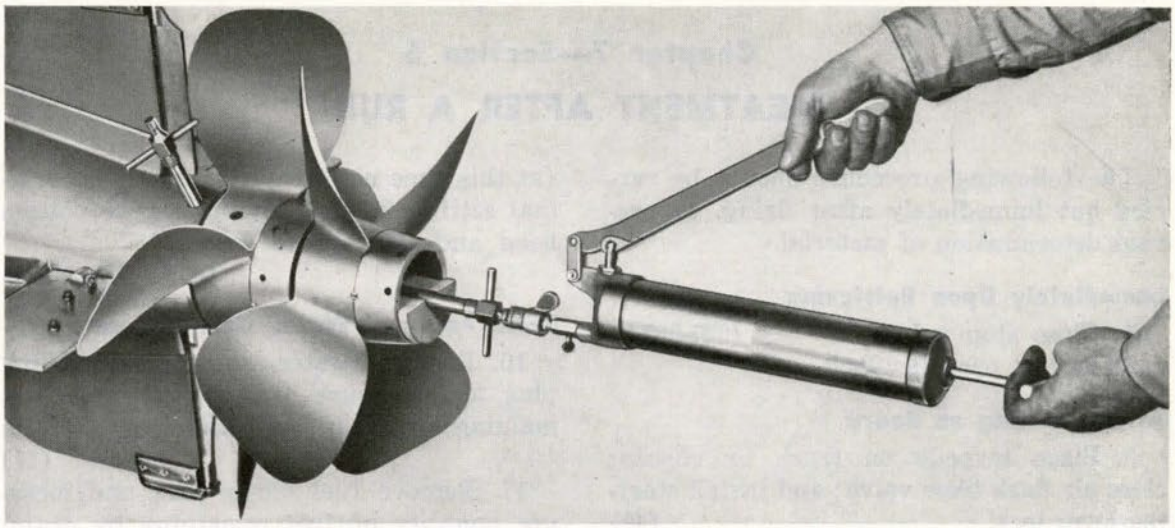

Figure 131

80. Again rotate starting index spindle one complete turn in the direction indicated by arrow on dial to seat starting piston. Match pointers on index spindle and starting gear. (227-227A)

81. Check speed setting (not applicable to Torpedoes Mk 23 Type). (491)

82. Remove tail. (See **Note.**) For procedure see Chapter 8.

Note: Execution of steps 84 to 87 inclusive is not required on torpedoes fitted with new-type exhaust valves.

83. Wipe and clean oil from around exhaust-valve seats.

84. Heat Tackiwax to approximately 215 degrees and apply with a brush around exhaust valve seats. One application is sufficient.

85. Replace tail. For procedure see Chapter 8.

Caution: Under no circumstances should the tail be allowed to rest on or touch holding studs for exhaust-valve bracket when reassembling on afterbody, as this may jar the exhaust-valve bracket sufficiently to break the seal of the Tackiwax. Extreme care should be exercised that no change in rudder-rod adjustments takes place after removal of tail.

86. Open stop valve wide and turn back one-eighth turn. (227-227A)

87. Install igniter with washer, and connect pipe. (391A, 438)

Note: When connecting the igniter, be sure that nut is set up tight.

88. Run torpedo home gently until guide stud meets stop bolt.

89. Engage depth and gyro spindles with tube-setting gears and check for engagement.

90. Remove depth setting as set in step 74.

Caution: Be absolutely certain at all times when torpedo is loaded in tube that the gyro angle setting and depth setting on torpedo and the tube are in coincidence.

91. Place propellers in a position for easy removal of propeller lock.

92. Remove grease plug and washer from propeller shaft and repack propeller shafts with grease (G) (Fig. 131). (184,481,481A)

Note: Do not turn propellers after repacking shafts.

93. Replace grease plug and washer. (184)

94. Remove propeller lock.

95. Check buffer clearance, being careful not to force torpedo guide stud under stop bolt.

96. Re-check check-off list carefully to make certain that no step was omitted. Close tube door.

The above will complete the final adjustments and final preparation for firing.

Chapter 7—Section 5

TREATMENT AFTER A RUN

The following procedure should be carried out immediately after firing, to prevent deterioration of material.

Immediately Upon Retrieving

1. Close stop valve. (227-227A)
2. Put on propeller lock.

After Hoisting on Board

3. Place torpedo on truck or chocks; close air flask blow valve; and install starting-lever lock. (49)
4. Rotate starting-gear index spindle to seat starting piston. (227-227A)
5. Remove headlight from exercise head and re-set switch. (48)

Drain Afterbody and Tail

6. Remove replacement screw and insert transportation screw. (49)
7. Remove drain plugs from afterbody and tail. (13-14)
8. Replace afterbody drain plug. (13-14)
9. Remove gyro clamp-plate cover. (13-14)
10. Disconnect pipe and remove igniter. (438,391A)

Fill Oil Tanks

11. Fill oil tanks with oil (B). Measure quantity of oil required to fill tanks and note difference between this amount and the capacity of oil tanks to determine quantity used during run. (13-14)

Drain Combustion Flask

12. Turn torpedo over sufficiently to drain combustion flask.
13. Drain combustion flasks. Turn torpedo bottom-side-up; install dummy igniter; and connect pipe. (391A, 438)

Remove Gyro

14. Remove gyro bottom head. (205A-246)
15. Remove gyro; wipe pot dry; clean and oil (A) top and bottom gyro bearings (at this time note if gyro angle is on original setting in pot). Replace gyro bottom head and clamp-plate cover. (205A-246, 13-14)

Drain Fuel and Water Compartments

16. Remove water-compartment filling plug and measure quantity of water remaining after run by draining into a can. (11)
17. Remove fuel filling plug and measure quantity of fuel remaining by draining into a can. (217, 74)
18. Replace water filling plug. (11)
19. Turn torpedo right-side-up. Remove propeller lock.

Overhaul and Clean Tail

20. Remove after propeller-sleeve lock nut. (183)
21. Remove after propeller and sleeve with bushings.
22. Remove forward propeller lock screws. (40)
23. Remove forward propeller nut (L. H. thread). (425)
24. Remove forward propeller, key and hub. (40)
25. Remove rudder connection screws. (386)
26. Remove tail joint screws. (49 or 184)
27. Remove tail.
28. Remove forward propeller-sleeve locking screws. (72, 40)
29. Remove forward propeller sleeve.
30. Insert cotter pins in the exhaust valve stems (old style exhaust valves only).
31. Remove cotter pins and nuts on exhaust-valve bracket studs, and remove exhaust-valve bracket assembly. (72, 408)
32. Clean, inspect, and oil (D) exhaust-valve springs.
33. Replace exhaust-valve bracket assembly. Clean valves and wipe them to their seats with oil (B). (408, 72)

34. Remove cotter pins from exhaust-valve stems (old style only). (72)

35. Replace forward propeller sleeve, lining up "zero" marks.

36. Replace forward propeller lock sleeve lock screws and wire all screw heads. (40, 72)

37. Replace tail and secure with joint screws. (49 or 184)

38. Replace key and hub on forward propeller sleeve.

39. Replace key and forward propeller.

40. Replace forward propeller nut (L.H. thread). (425)

41. Replace forward propeller nut-lock screws. (40)

42. Clean, inspect, grease (G) bushings thoroughly, and replace on after propeller sleeve.

43. Replace after propeller sleeve and propeller.

44. Replace after propeller-sleeve lock nut. (183)

45. Replace rudder connection screws. (386)

46. Replace rudder access and tail drain plugs. (13-14)

47. Remove grease-packing screw and washer from after propeller shaft. With hand grease gun, fill after propeller shaft with grease (G). Turn propellers at least three turns while greasing. Replace grease-packing screw and washer. (184, 481, 481A)

48. In torpedoes which do not have the improved tail lubricating system, remove grease plug from tail cone, fill tail bearing with grease (G), and replace grease plug, noting that it is proper plug (flat end). Turn propellers at least three turns while greasing. (13-14, 481, 481B)

49. In torpedoes which do not have the improved tail lubricating system, remove grease plug from forward propeller, fill hub with grease (G), and replace grease plug. Turn propellers at least three turns while greasing. Replace propeller lock. (40, 481, 481B)

50. In torpedoes which have the improved tail lubricating system, remove grease plug from after propeller, fill grease shell (inside after propeller sleeve) with grease (G), and replace grease plug. Turn propellers at least three turns while greasing. Replace propeller lock. (40, 481, 481B)

Make Deck Run to Check and Oil Engine

51. Remove charging-valve plug, and install charging pipe and safety strap. (13-14)

52. Open stop valve and charge flask to 1000 p.s.i. (227-227A)

53. Close stop valve. (227-227A)

54. Bleed and remove charging pipe and safety strap.

55. Replace charging-valve plug. (13-14)

56. Place tool on starting-gear spindle as a safety measure. (227-227A)

57. Remove propeller lock.

58. Set speed-change mechanism to low speed (not applicable to Torpedoes Mk 23 Type. (419)

59. Turn propellers by hand and note if engine turns over freely.

60. Remove starting-lever lock and push starting lever to the rear.

61. Gradually open stop valve and give torpedo a deck run until clean oil comes out of drain plug. Control speed with stop valve. (227-227A)

62. Rotate starting-index spindle to seat starting piston. (227-227A)

63. Close stop valve. (227-227A)

64. Replace propeller lock and starting-lever lock.

65. Remove water-compartment filling plug. Replace fuel filling plug and replace water-compartment filling plug. (11, 217, 74)

Note: If torpedo is to be made ready for firing immediately, proceed with "Final Adjustments".

IF TORPEDO IS NOT TO BE FIRED IMMEDIATELY, PROCEED AS FOLLOWS:

For instructions relative to complete disassembly, overhaul, assembly, and tests, personnel shall be guided by Chapter 8.

66. Remove hand-hole plates. (48)

67. Remove forward gyro index gear assembled. (72)

Remove Control Valve

68. Disconnect pipes and clamp and remove control valve. (141A, 41, 155)

69. Remove compression on control-valve spring; clean, oil (C) and stow in box provided. (40)

Remove Gyro and Depth Mechanism

70. Set depth index on zero. (135A)

71. Turn torpedo bottom-side-up.

72. Disconnect water pipe from depth-mechanism casing. (144)

73. Disconnect air pipe and valve connection from depth engine. (141A, 205A-246)

74. Disconnect air pipes and valve connection from steering engine. (141A, 24, 205A-246)

75. Disconnect depth and steering-rudder rods and remove depth and steering engines. (449, 72, 49A)

76. Disconnect gyro spin pipe. (437)

77. Remove holding screws from gyro housing. (456)

78. Remove clamp-plate cover and bottom head. Lock spinning mechanism. (13-14, 205A-246)

79. Install lifting screws and remove gyro and depth mechanism from afterbody. (200-441)

80. Wipe gyro pot dry, using rags free of lint.

81. Blow moisture out of gyro top bearing with low-pressure air. Oil (A) two drops, using syringe.

82. Blow moisture out of gyro bottom bearing with low-pressure air. Oil (A) two drops, using syringe.

83. Blow moisture out of spinning mechanism with low-pressure air. Wipe all parts dry and apply oil (B).

84. Wipe dry all parts of gyro and depth mechanism. Oil (B) thoroughly for preservation.

Oil Engine Gearing and Bearings

85. Remove manifold cover plate. (48, 200-441)

86. Remove main engine; thoroughly slush all parts. Oil (B) and replace.

Note: If conditions prevent the removal of main engine for preservation, immediately after firing, the procedure outlined below may be carried out as a temporary expedient. It must be understood, however, that the only effective method for preserving the power plant during the interval between firing and complete overhaul by the tender is by its removal from the afterbody in order to slush properly all parts.

Temporary Procedure: With heated oil (B), use oil syringe and lubricate and spray all parts of main engine, starting gear, etc., paying particular attention to ball races, washers, and steel parts, which would become rusty from lack of attention. This can be accomplished through the hand holes, the manifold access hole, and the gyro housing opening. (94)

Starting Gear

87. Blow moisture out of the starting gear with low-pressure air, noting that the mechanism is free of rust and in proper working order. Oil (B), using oil syringe. (94)

Replace Gyro and Depth Mechanism

88. Replace gyro and depth mechanism with gasket, and secure. (200-441, 456)

89. Connect gyro spin pipe. (437)

90. Replace depth and steering engines. Make valve and rudder-rod connections. (49A, 205A-246)

91. Connect air pipes to steering engine. (24, 141A)

92. Connect air pipe to depth engine. (141A)

93. Connect water pipe to depth-mechanism casing. (144)

94. Replace gyro bottom head. (205A-246)

95. Replace gyro clamp-plate cover and gasket. (13-14)

96. Drain afterbody and tail, and replace plugs. (13-14)

The above steps will place the torpedo in a state of preservation until opportunity is given for overhaul by the tender.

Chapter 7—Section 6

ROUTINE FOR UPKEEP OF FULLY READY TORPEDO

DAILY

If tubes have not been flooded:

1. Disengage tube spindles; open tube door; install propeller lock (do not turn propellers) and withdraw torpedo sufficiently for access to stop and charging valve.
2. Install starting-lever lock.
3. Gage air flask. Boost if necessary. **(13-14)**
4. Remove starting-lever lock and push torpedo back into tube.
5. Remove propeller lock.
6. Close tube door.
7. Engage tube spindles.

If tubes have been flooded:

1. Disengage tube spindles; open tube door; install propeller lock; and withdraw torpedo sufficiently for access to stop and charging valve.
2. Install starting-lever lock.
3. Remove drain plug; drain afterbody and replace drain plug. **(13-14)**
4. Gage air flask. Boost if necessary. **(13-14)**
5. Lubricate tail as in steps 3 through 5 of "Final Adjustments".
6. Remove starting lever lock and push torpedo back into tube.
7. Remove propeller lock.
8. Re-pack tail bearing with grease (G). (Do not turn propellers after re-packing). **(183, 40, 481, 481A, 481B)**
9. Close tube door.
10. Engage tube spindles.

WEEKLY

Proceed as in step under "If tubes have been flooded", with the following additions:

1. Turn propellers by hand at least 100 turns.
2. Shift speed-change mechanism to both speeds and return to required speed setting (not applicable to Torpedoes Mk 23 Type). **(419)**
3. Operate depth-setting mechanism from zero to 50 feet and return to zero. **(135A)**
4. Refill oil tanks. **(13-14)**

MONTHLY, OR AFTER EACH SEA PATROL

1. Remove torpedo from tube:
   (a) Open tube door and put on propeller lock.
   (b) Lift tripping latch.
   (c) Disengage tube spindles.
   (d) Remove torpedo from tube and place on skid.
   (e) Close stop valve. **(227-227A)**
2. Install starting-lever lock.
3. Disconnect and remove igniter. Note condition of end seal. Replace in container and put in stowage space. **(438, 391A)**
4. Remove afterbody drain plug and one tail-cone drain plug. Drain afterbody and tail cone. Replace drain plugs. **(13-14)**
5. Turn torpedo bottom-side-up, draining combustion flask on way over.
6. Remove exploder mechanism, detonator, impact switch, and booster:
   (a) Remove screw, filler piece, plug and washer, and felt washer from recess in nose of head. **(40, 388)**
   (b) Remove pick-up coil core and disassemble. **(MF5)**
   (c) Replace plug and washer, filler piece, and screw. **(388, 40)**
   (d) Remove holding screws from exploder-mechanism base plate. **(49)**
   (e) Install lifting tools and lift mechanism sufficiently clear to disconnect wires to impact switch. **(MF2)**
   (f) Disconnect wires from switch. **(435)**
   (g) Remove mechanism to bench.
   (h) Remove screws, safety chamber, and detonator. Replace screws in exploder mechanism. **(41)**
   (i) Place detonator in container; seal up tightly and place in stowage space.
   (j) Install lifting tools on the inside of the base plate and place mechanism

in box. Place impact switch in box. Secure box and place in stowage space. **(MF2)**

7. Remove booster from casing; place in container, seal tightly, and place in stowage space.

8. Replace cover plate in exploder mechanism casing in head and secure. **(49)**

9. Turn torpedo right-side-up.

10. Remove check valve plugs, work and oil (C) check valves, and replace plugs. **(405, 406, 74)**

11. Remove strainer plugs; remove and clean fuel and water strainers. Replace strainers and strainer plugs. **(405, 372A)**

12. Remove hand-hole plates and port forward gyro index gear assembly. **(48, 72)**

13. Check action of starting gear:

(a) Remove starting-lever lock and throw starting lever to rear by hand.

(b) Rotate starting gear index spindle through several complete revolutions. Continue until scribe marks coincide. **(227-227A)**

14. Test setting of control valve:

(a) Break connections and remove control valve. **(141A, 41, 155)**

(b) Test control valve in Control Valve Testing Panel and note that pressure is same as record-book pressure. Note that control valve functions properly. For procedure, see Chapter 8.

(c) Install control valve in afterbody and connect pipes. **(41, 155, 141A)**

15. Operate depth-setting mechanism from zero to 50 feet and return to zero. **(135A)**

16. Swing pendulum back and forth a few times by hand.

17. Work depth rudders a few times up and down by hand, using one hand on each rudder, with the same amount of force on each.

18. Operate steering rudders by hand, using same method as in step 17.

19. Remove propeller lock. Turn propellers by hand at least 100 turns. Listen for unusual sounds. Check action of pallet and slide to see that pallet does not engage pallet pawls while in neutral position with gyro locked.

20. While propellers are being turned over by hand, move steering-engine control valve by hand. Note that pallet does not strike pallet pawls.

21. Try speed-change mechanism in both speeds; re-set for desired speed setting (not applicable to Torpedoes Mk 23 Type). **(419)**

22. Replace propeller lock.

23. Lubricate torpedo:

(a) Remove plug and fill oil tanks with oil (B) (preferably warm). After filling, remove propeller lock; turn propellers by hand and note that oil pump takes suction as evidenced by the dropping of oil level in the filling hole. Refill oil tanks and replace plug. **(13-14)**

(b) Remove grease-packing screw and washer from after propeller shaft. With hand grease gun, fill after propeller shaft with grease (G). Turn propellers at least three turns while greasing. Replace grease-packing screw and washer. **(184, 481, 481A)**

(c) In torpedoes which do not have the improved tail lubricating system, remove grease plug from tail cone, fill tail bearing with grease (G), and replace grease plug, noting that it is proper plug (flat end). Turn propellers at least three turns while greasing. **(13-14, 481, 481B)**

(d) In torpedoes which do not have the improved tail lubricating system, remove grease plug from forward propeller, fill hub with grease (G), and replace grease plug. Turn propellers at least three turns while greasing. Replace propeller lock. **(40, 481, 481B)**

(e) In torpedoes which have the improved tail lubricating system, remove grease plug from after propeller, fill grease shell (inside after propeller sleeve) with grease (G), and replace grease plug. Turn propellers at least three turns while greasing. Replace propeller lock. **(40, 481, 481B)**

24. Install starting-lever lock and crack stop valve. **(227-227A)**

25. Turn torpedo bottom-side-up, draining combustion flask on way over.

26. Inspect gyro and gyro mechanism:

(a) Remove gyro clamp-plate cover, unlock gyro by hand, and remove bottom head. **(13-14, 205A-246)**

(b) Remove and inspect gyro, noting that balance nut is tight. Apply two drops of oil (A) in each bearing, using syringe.

(c) Lock and unlock spinning mechanism by hand and by rotating spinning shaft. **(205A-246)**

(d) Turn top plate full range right and left. Note that gyro index inside the pot is on zero and lines up with outside setting. **(444)**

(e) Remove propeller lock and turn propellers until cam pawls are in extreme after position. Replace propeller lock.

(f) Install gyro; install bottom head; lock gyro; install gasket and gyro clamp-plate cover. **(205A-246, 13-14)**

27. Replace forward gyro index gear assembly and hand-hole plates. **(48, 13-14)**

28. Install booster, detonator, and exploder mechanism in accordance with steps listed in "Final Adjustments".

29. Turn torpedo right-side-up, draining combustion flask.

Note: While turning torpedo, drain enough water from water compartment to uncover fuel plug.

30. Top off fuel and water tanks and replace plugs. **(217, 74, 11)**

31. Install wing nut and safety strap, and boost air flask to full pressure. **(13-14)**

32. Install igniter and connect pipe. **(391A, 438)**

33. Load torpedo in tube in accordance with instructions in "Final Adjustments".

Note: After removing propeller lock and before closing the tube door, fill the tail bearing with grease (G).

Chapter 7—Section 7

LUBRICATION GUIDE

Key to Oils and Greases Authorized for Uses Shown

Symbol	Description
A	Torpedo Gyroscope Oil (OS 814).
B	Hot Running Torpedo Oil (as alternate, use "H").
C	Light, Class 2, Forced-Feed Mineral Lubricating Oil, Navy Symbol 2110.
D	Mineral Marine Engine and Cylinder Oil, Navy Symbol 5190.
E	Petrolatum, Navy Department Specification (14-P-1) with modified consistency of 200-230 seconds.
F	Grease, Mineral, Lubricating (Cup) Medium, purchased under Navy Department Specifications 14-G-1. The Federal Stock Catalogue number for this material is 14-G-1680 for ten-pound cans.
G	Naval Torpedo Station Tail-Packing Compound, obtained only by requisition to tenders, bases, or stations.
H	Light, Class I, Forced-Feed Mineral Lubricating Oil, Navy Symbol 1100.
J	Light Rust-Preventive Compound, Polar Type; Grade III of BuShips Specifications (52-C-18) INTERIM of March 15, 1941.
K	Heavy Rust-Preventive Compound, Polar Type; Grade I of BuShips Specifications (52-C-18) INTERIM of March 15, 1941.

Key to Numbers and Lubricating Routines (Fig. 132A)

1. Exterior of Torpedo. Slush with compound (K).

War Head

2. Exploder Mechanism. Apply oil (C) to firing mechanism. Lubricate impeller shaft with grease (F) to impeller-shaft worm.

3. Head and Flask Joint and Joint Screws. Apply oil (D).

Exercise Head

4. Headlight Gasket. Apply petrolatum (E).

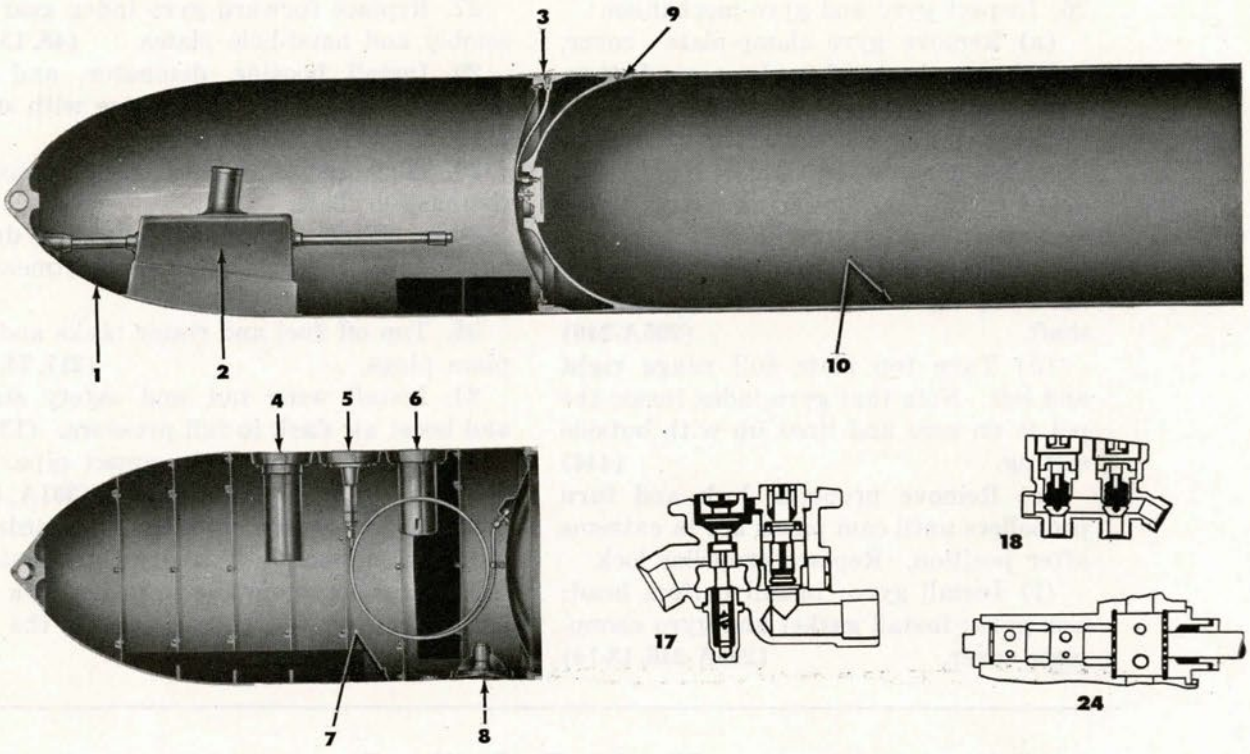

Figure 132A

5. Air-Releasing Mechanism. Apply oil (C) on working parts. Apply petrolatum (E) on gasket.

6. Torch Case Gasket. Apply petrolatum (E).

7. Interior of Exercise Head. Apply compound (J).

8. Water Discharge Valve. Exercise and grease with petrolatum (E). Apply (E) on washer.

Air Flask

9. Forward Bulkhead Joint. Apply 75 per cent strained white lead and 25 per cent oil (C). Apply oil (D) to holding screws.

10. Interior of Air Flask (Forged). Coat with compound (J). Interior of Air Flask (Welded). Clean with hot water and blow dry—use no preservative.

11. Interior of Water Compartment. Apply rust-preventive compound (J).

12. Fuel and Water Filling Plugs. Apply oil (C).

13. Water-Compartment Head Joint. Apply 75 per cent strained white lead and 25 per cent oil (C). Water-Compartment Head Screws. Apply oil (D).

14. Main Air Connections through bulkheads. Apply 75 per cent strained white lead and 25 per cent oil (C).

15. Flask and Afterbody Joint and Joint Screws. Apply oil (D).

Midship Section

16. Interior of Midship Section. Coat with rust-preventive compound (J).

17. Stop and Charging Valve. Exercise and apply oil (C).

18. Air Check Valves. Apply oil (C).

19. Fuel and Water Strainers and Check Valves. Apply oil (C).

20. Speed-Change Bracket. Apply oil (B).

Afterbody

21. Igniter Threads. Apply oil (D).

22. Starting Valve. Apply oil (C).

23. Reducing Valve. Apply oil (B) to sleeve. Immerse packing for sleeve in oil (D).

24. Restriction Valve. Apply oil (B) to valve. Immerse packing in oil (D).

25. Main Engine Gears and Bearings. Apply petrolatum (E) to balls and races. Apply oil (B) to gears.

26. Depth-Index Setting. Apply oil (B).

27. Oil Tanks. Fill with oil (B).

28. Gyro Reducer. Apply oil (C).

29. Starting Gear. Apply oil (C).

30. Afterbody After-Bulkhead Bearing. Apply petrolatum (E) at assembly.

31. Exhaust Valves. Apply oil (B).

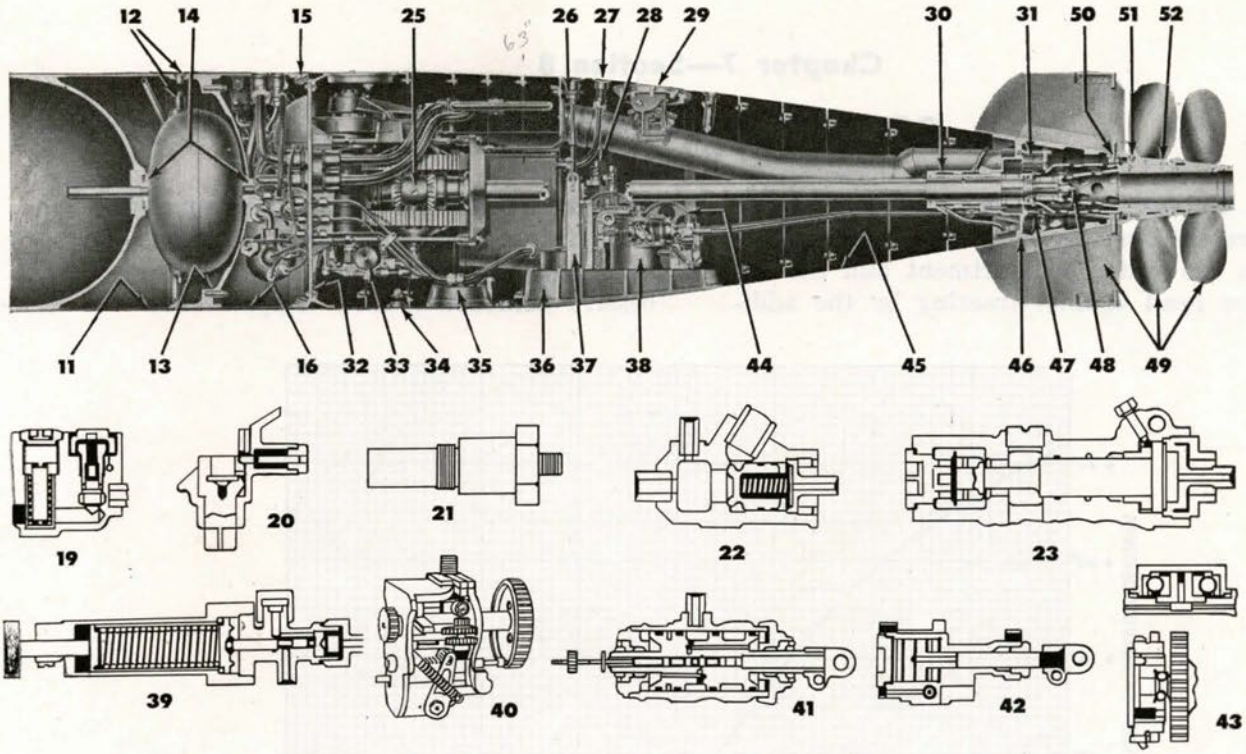

32. Turbine Bulkhead Gasket. Apply oil (D).

33. Oil Pump. Apply oil (B).

34. Drain Plug. Apply oil (D).

35. Manifold Cover Gasket. Apply oil (D).

36. Gyro Door Frame. Apply oil (D).

37. Depth Mechanism. Apply oil (C).

38. Gyro Mechanism. Lubricate entire mechanism with oil (C).

39. Control Valve. Apply oil (D) to spring, oil (C) to valve.

40. Gyro Spinning and Unlocking Mechanism. Apply oil (C).

41. Depth Engine. Apply oil (C). Immerse packing for engine cylinder in oil (D).

42. Steering Engine. Apply oil (C). Immerse packing for engine cylinder in oil (D).

43. Gyro Bearings. Apply oil (A).

44. Gyro Index Gears. Apply oil (C).

45. Interior of Afterbody. Apply oil (B) after retrieving and pending overhaul.

46. Afterbody and Tail Joint and Joint Screws. Apply oil (D).

47. Rudder-Rod Connections. Apply oil (C). Apply oil (D) to packing in stuffing boxes.

48. Propeller-Shaft Bearings and After Bulkhead Bearing. Grease with packing compound (G).

Tail

49. Propeller, Rudder and Tail Blade Surfaces. Coat with rust-preventive compound (K).

50. Rudder Bearings. Apply oil (D).

51. Bearing in Tail Cone. Fill with packing compound (G) (if torpedo does not have improved tail lubricating system).

52. Forward Propeller Hub (After Propeller Hub if torpedo has improved tail lubricating system). Fill with packing compound (G).

GUIDE TO LUBRICATION PROCEDURES AT:

Preliminary Adjustments

Perform numbers:
5, 8, 18, 19, 27, 43, 48, 51, 52.

Final Adjustments

Perform numbers:
2, 3, 4, 18, 19, 21, 27, 43, 48, 51, 52.

Procedure After a Run

Perform numbers:
1, 27, 31, 39, 43, 45, 48, 51, 52.

Overhaul

Perform all except number 45.

Chapter 7—Section 8

GENERAL INFORMATION

1. Submarines or surface craft which operate in freezing weather, should protect both the water compartment and the exercise head against freezing by the addition of alcohol to the water when necessary (see Fig. 132B).

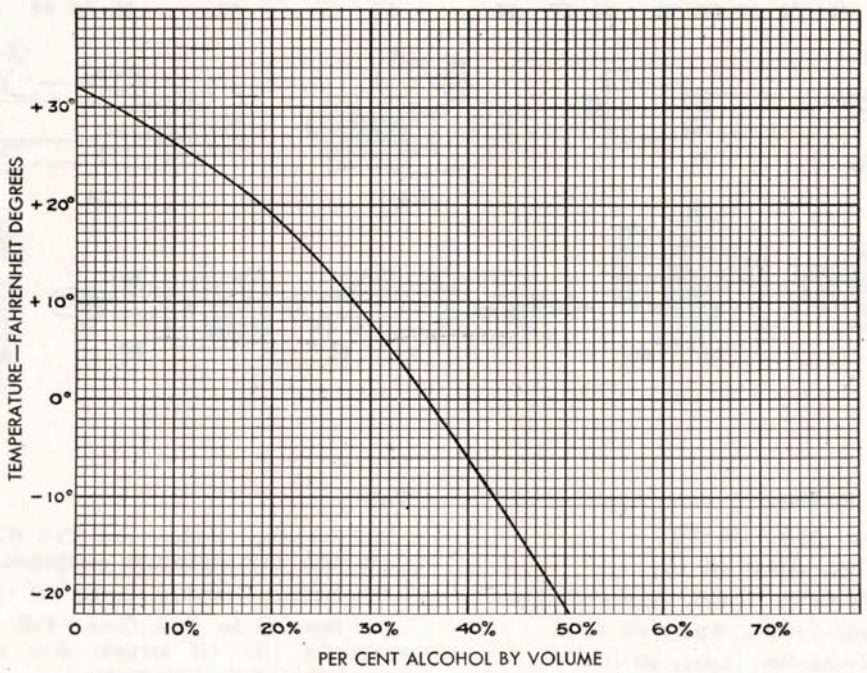

Figure 132B

2. Possibility of freezing also makes additional precautions necessary to guard against the presence of water in any of the torpedo piping.

3. The method described below should be strictly adhered to for mixing anti-freeze solution:

(a) Alcohol and water should be thoroughly mixed before pouring into the water compartment.

(b) Whenever practicable, the percentage of alcohol in the water compartment should not exceed that necessary to protect against freezing at a temperature of 30 degrees below the existing atmospheric temperature; otherwise power-plant damage may result from the resulting excessive combustion-flask temperature.

Instructions for Mixing Pour-Point Depressant with Hot Running Torpedo Oil for Torpedoes

(Santopour, Monsanto Chemical Co.)

1. If torpedoes are to be used at temperature lower than 40 degrees Fahrenheit, a pour-point depressant compound should be added to the hot running torpedo oil in the oil tank to prevent the oil from congealing at low temperatures. Six ounces of pour-point depressant should be used for each five gallons of hot running torpedo oil. The hot running torpedo oil must be heated to between 140-150 degrees Fahrenheit, the pour-point depressant added, and the mixture agitated until thorough blending is assured.

Chapter 8

DISASSEMBLY, OVERHAUL, ASSEMBLY, AND TESTS

GENERAL
SECTION 1—Exercise Head
SECTION 2—Air-Flask Section
SECTION 3—Afterbody—Removal of Major Units from
SECTION 4—Afterbody, with Parts Assembled to Shell
SECTION 5—Valve Group and Superheater
SECTION 6—Main Engine
SECTION 7—Starting Gear
SECTION 8—Depth Mechanism, Gyro Mechanism, and Gyroscope
SECTION 9—Tail Cone Assembly
SECTION 10—Afterbody—Assembly and Test
SECTION 11—Assembly of Afterbody on Air Flask

GENERAL

1. The instructions contained in the Bureau of Ordnance Manual set forth the prescribed methods for care and handling of torpedoes and torpedo tubes aboard ship. The instructions contained in this Manual have the full force of Navy Regulations. In addition to the Bureau of Ordnance Manual, instructions in the form of NavOrd Circular Letters, Naval Ordnance Technical Information, and NavOrd Ordalts are issued by the Bureau of Ordnance as required for the proper care and handling of, or changes in, torpedoes and torpedo equipment. The personnel responsible for torpedoes on board ship must familiarize themselves with the contents of the publications referred to above in order to comply with the instructions contained therein.

2. The purposes to be accomplished in the periodic overhaul of a torpedo are as follows:

(a) Clean all the torpedo parts.

(b) Examine all parts for defects.

(c) Renew or repair defective parts.

(d) Make proper assembly of the parts.

(e) Test the individual mechanisms.

(f) Test to check the proper functioning of the torpedo as a whole.

(g) Properly treat the parts to preserve them from deterioration.

3. Many years of torpedo experience under normal service conditions have indicated the advisability of a centralized overhauling station (ship) for all types of vessels. Uniform methods, complete knowledge of the torpedo and adequate tools and testing equipment, including competent personnel, are requisites to proper overhaul and can better be materialized in a centralized overhauling station (ship) than in all the various vessels in the service which carry torpedoes. Uniformity in method insures the use of the best method under all circumstances; complete knowledge of the torpedo is a guarantee of the completeness of overhaul; adequate tools and testing equipment provide the assurance that when overhaul is completed, a satisfactory service run will be obtained; competent personnel insures rapidity of accomplishment of high grade work. The tools issued for the

overhaul may be the finest, and the very best methods of overhaul may be prescribed, but both may fail to produce results if the personnel is not up to the necessary standard. The necessary standard of personnel not only entails a complete knowledge of a torpedo, but also includes mechanical ability.

4. This chapter covers all the steps necessary for normal disassembly, overhaul, assembly, and tests. Completion of these steps will place the torpedo in a "Ready" condition (ready for adjustments preparatory for firing).

5. The tools for each operation are listed. Tools so listed are grouped under the following headings:

(a) Torpedo Tools

(b) Workshop Equipment Tools

(c) Special Testing Fixtures

Tools listed under (a) above are sufficient to allow disassembly, emergency repairs or adjustments, and the application of the preliminary and final adjustments before firing. Tools listed under (b) above are for exclusive use in the torpedo workshop for major overhaul and for fitting renewal parts when necessary. Workshop equipment tools are designated by the prefix "WE" before the tool number.

Fixtures listed under (c) above are used for testing the individual units of a torpedo prior to assembling in a torpedo. Description of and instructions for the use of these fixtures will be found in OP 1217, which supersedes OD 750.

6. All asbestos gaskets (except the nozzle gasket on turbine bulkhead) and their flanges should be treated with gasket sealing wax to minimize leakage of sea water into submarine torpedoes. The procedure for applying gasket sealing wax is as follows:

(a) Clean holding surfaces.

(b) Heat gasket sealing wax to molten state (approximately 200 degrees Fahrenheit).

(c) Coat holding surfaces evenly by painting on hot wax with a brush unless metal is cold. If metal is cold, use a hot soldering iron to obtain a good bond.

Caution: Do not allow wax to drip into intricate parts of the torpedo.

(d) Dip gaskets into wax and allow excess to drip off.

(e) Place gaskets on flanges and seal opening. Tighten holding nuts or screws evenly all around.

7. Throughout the text of Chapter 8, steps preceded by an asterisk (*) will be found. These steps should be carried out only if necessary to repair or renew parts which are not normally removed or disassembled in the course of overhaul.

Chapter 8—Section 1

EXERCISE HEAD

DISASSEMBLY

A. Remove Head from Air Flask

1. Drain; sling head; remove joint screws. **(13-14, 49)**

2. Push head just clear of air flask and disconnect (at exercise head nipple) the air pipe which connects air-flask blow valve to exercise head. **(141A)**

B. Remove Air-Releasing Mechanism

1. Remove holding nuts and cover for air releasing mechanism, and lift mechanism clear of head. **(48)**

2. Disconnect air pipe, and remove mechanism and gasket. **(141A, 229)**

C. Remove Bulkhead

1. Remove nuts holding bulkhead and withdraw bulkhead from exercise head with air-releasing mechanism pipe attached. **(48, 61)**

2. Remove gasket from bulkhead seat.

*D. Remove Air-Releasing Mechanism Pipe

1. Loosen pipe clip screw to free pipe. **(41)**

2. Disconnect and remove pipe from bulkhead. **(141A)**

E. Remove Torch Case

1. Remove nuts securing torch case cover. **(48)**

2. Remove torch case cover, torch case, and gasket.

F. Remove and Disassemble Water-Discharge Valve(s)

1. Remove holding nuts and spring plate(s). **(48)**

2. Remove valve(s) and spring(s).

*3. Slip Tool No. 241A-242A over valve assembly; clamp assembly in vise jaws and remove valve nut and leather washer. **(448, 241A-242A)**

Note: Leather washer should be discarded if cracks, hardness, or verdigris are present.

G. Disassemble Air-Releasing Mechanism Mk 2

1. Remove adjusting nut cap and washer, adjusting nut keep screw, and adjusting nut. **(141A, 41, 18)**

2. Remove spring and spring support.

3. Remove bottom nipple, washer, and valve. **(141A, 18)**

H. Disassemble Air-Releasing Mechanism Mk 3

1. Unscrew adjusting nut cap and washer adjusting nut keep screw, and adjusting nut. **(141A, 41, 18)**

2. Remove spring and spring support.

3. Remove bottom nipple and washer. **(451, 229)**

4. Remove air strainer.

5. Remove strainer holder and washer. **(451, 229)**

6. Remove valve.

I. Disassemble Headlight Mechanism

1. Remove batteries to charge:

Note: Batteries should be charged after every run in which headlight is used.

(a) Unscrew headlight casing.

(b) Remove four batteries.

(c) Charge batteries. (See OP 1217 for charging procedure).

*2. Remove bulb:

Note: Bulb should be replaced after it has been used for 15 runs.

(a) Remove holding screws, retainer ring, lens, and washers. **(41, 61)**

(b) Unscrew bulb.

*3. Disassemble remainder of headlight mechanism:

Note: Remainder of headlight mechanism should be disassembled only if necessary to renew damaged parts.

(a) Hold base plate with spanner wrench and unscrew headlight body from base plate. **(499)**

Caution: Make certain that bulb has

been removed before performing above step; otherwise bulb will be broken.

(b) Remove three screws, nuts holding clips, and reflector. (41)

(c) Disassemble parts assembled on base plate:

(1) Disconnect spring; remove cotter pin, washer, and inertia weight. (92)

(2) Disconnect spring; remove nut, wire with connection, cotter pin, washers, and switch lever. (435, 92)

(3) Unsolder wire from bulb socket; remove screws, and remove bulb socket. (41)

(4) Remove screws, bulb contact, and insulator under bulb contact. (41)

(d) Remove bottom plate assembly:

(1) Unsolder wires from bottom contacts.

(2) Unsolder nut securing bottom-plate assembly to central support rod.

(3) Remove nut, bottom plate assembly, key, and conduits. (141A)

(4) Remove phenolic bottom and insulator from bottom plate.

(e) Remove upper contacts:

(1) Remove phenolic top assembly from central support rod.

(2) Unsolder wires from upper contacts.

(3) File pins for contacts; drive out pins; remove contacts and springs.

J. Remove Marker Bomb From War Exercise Head

1. Remove nuts and ring securing marker bomb in place. (48)
2. Withdraw marker bomb from head.
3. Unscrew water cap from marker-bomb stock and withdraw spherical rubber packing and leads to expose taped connections.
4. Remove tape and unsolder connections.

K. Remove Marker-Bomb Switch from War Exercise Head

1. Disconnect lead to switch from battery terminal. (435)
2. Remove tape and disconnect lead from switch to marker bomb lead passing through gland in exploder casing.
3. Remove two nuts (port and starboard) and washers holding switch in casing. (48)
4. Withdraw switch from casing.

L. Remove Battery Assembly from War Exercise Head

1. Disconnect lead to marker bomb from battery terminal. (435)
2. Remove two nuts and lock washers holding battery assembly in casing. (48)
3. Remove battery assembly from casing.

The above completes the disassembly of the Exercise Head.

OVERHAUL, ASSEMBLY AND TESTS

*M. Replace or Resolder Studs for Bulkhead and Flanges

1. Apply heat to stud until stud will unscrew with screw driver. (41)
2. Tin new stud and screw in place when hot; wipe excess solder off threads with rag and chase thread on screw with ¼-inch x 20-finger die. (442, 490)

N. Treatment of Interior of Head

1. Clean interior of head thoroughly.
2. Treat exposed surfaces with a protective coating of preservative (J).

*O. Lead Ballast

1. Should necessity arise for the removal and re-installation of lead ballast, due to corrosion under ballast or removal of dents in shell, the ballast must be replaced in exact location from which removed.
2. Shell having been cleaned and given a heavy coating of tin, replace lead weight and solder in place using soldering iron.

P. Torch Case

(Fig. 133A)

1. Clamp the bottom plate support, of torch case hydraulic test fixture in a vise, and insert torch case to be tested with a gasket on its under side.
2. Fill torch case with water.
3. Place rubber washer on top of torch case.
4. Secure top plate on fixture, using metal washers under nuts. (18)

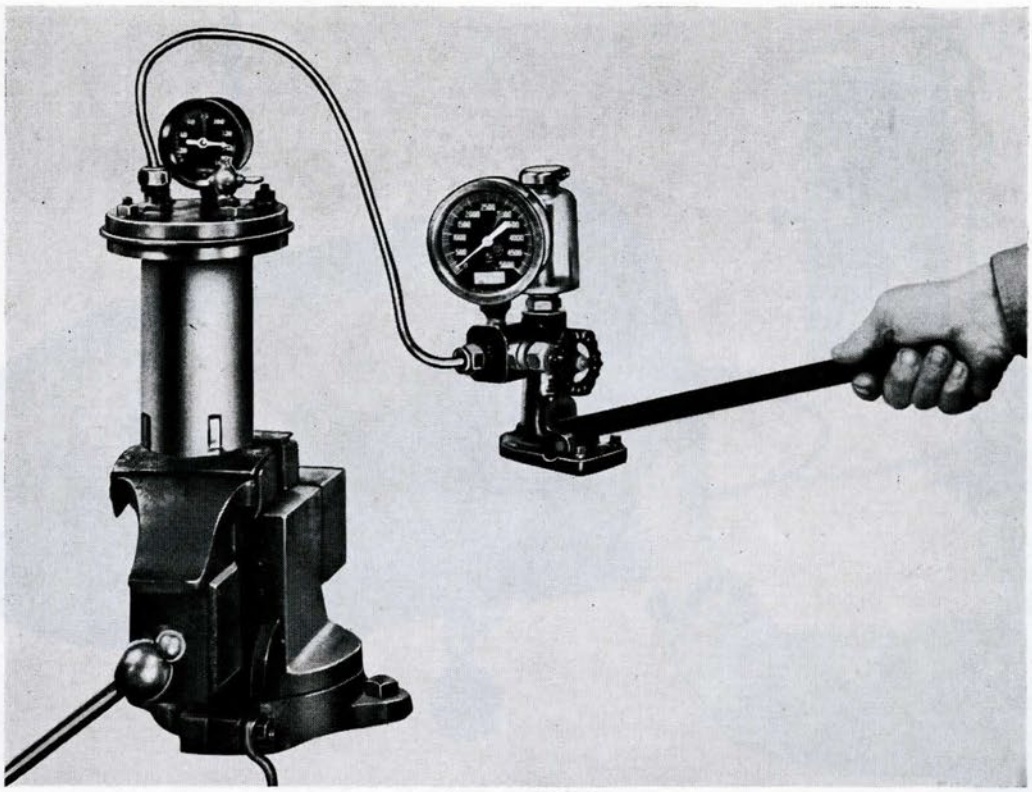

Figure 133A

5. Connect pipe from hydraulic test pump to nipple on top plate. **(229)**

6. Open pet cock and pump until water appears; then close pet cock.

7. Continue to pump until 135 p.s.i. pressure is obtained. Hold this pressure for five minutes, and examine carefully for leaks. If leaks are present, renew casing unless facilitities are available for effective repairs.

8. Disconnect pipe from top plate and remove torch case from fixture. **(229, 18)**

*Q. Air-Releasing Mechanism Pipe

1. Anneal pipes and bend to shape in accordance with drawings.

2. Reseat seats on pipe collars. **(WE86)**

3. Reseat nipples for pipes. **(WE85)**

R. Test Exercise Head for Leaks

*1. If leather washer was removed from water discharge valve(s) during disassembly, work grease (E) into a new washer, assemble new washer on valve, and tighten down with nut. **(448, 241A-242A)**

1a. If leather washer was not removed from valve(s) during disassembly, work grease (E) into used washer.

2. Clean, inspect, and grease (E) water-discharge valve guide, seat, and studs in valve flange.

3. Grease (E) and insert valve in flange; place gag across studs and secure with nuts, setting up until valve is held firmly on seat. **(48)**

*4. Insert air-releasing pipe into clip, and connect to nipple in bulkhead pocket. **(141A)**

*5. Tighten pipe clip screw.

6. Install bulkhead.

(a) Thoroughly clean bulkhead seats to remove all dirt, oil, and grease.

(b) Select a new bulkhead gasket, clean and inspect it thoroughly, and place it on bulkhead seat, over studs.

(c) Replace bulkhead and secure with nuts, tightening up evenly all around. **(61, 48)**

7. Connect nipple on bulkhead to source of high-pressure air. Hold forward end of

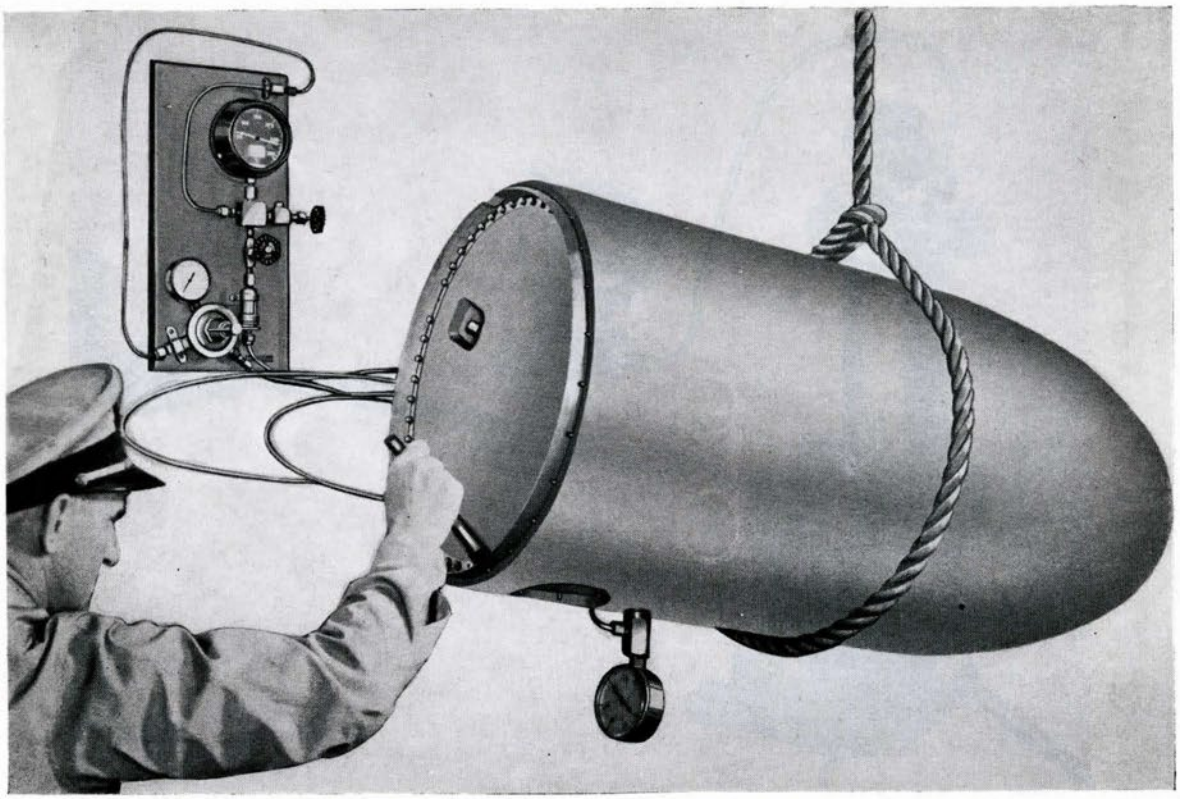

Figure 133B

air-releasing pipe clear of head; turn on air line valve to deliver about 600 p.s.i. pressure, and note flow of air through pipe. If it is suspected that restrictions are present in the air-releasing pipe, they must be located and remedied. Turn off air. **(141A)**

8. Blank off forward end of air-releasing pipe. **(141A, 18)**

9. Fill head with water.

10. Crack air-line valve and gradually build up pressure in air-releasing pipe to 2800 p.s.i. Bubbles will indicate leaks. All leaks must be located and remedied. Turn off air, bleed air line, and remove test pipe. **(141A)**

11. Remove drain plug and washer, and drain exercise head. Leave drain plug out. **(13-14)**

12. Install good gasket, torch case and cover, and secure with nuts. Tighten nuts evenly. **(48)**

13. Install good gaskets, blanking-off plates, and cutters in remaining flanges, and secure with nuts. Tighten nuts evenly. **(61, 48)**

14. Install test set, SG 2855, in drain plug flange. Connect pipe from test panel to test set; crack air line valve and build up pressure in head to 10 p.s.i. Close valve and apply soapy water around all flanges and joints. Bubbles will indicate leaks. Pressure on gage should remain constant for 10 minutes. (Fig. 133B). All leaks must be located and remedied. **(191, 141A)**

15. After satisfactory test has been made (no leaks), bleed head; remove test set; replace drain plug and washer; remove cover, blanking-off plates, and gaskets; remove blank from air-releasing pipe; and remove water-discharge valve gag(s) and valve(s). **(191, 141A, 13-14, 48, 61, 18)**

S. Water-Discharge Valve(s)

1. Inspect and apply grease (E) to leather washer.

2. Inspect spring and renew, if necessary.

3. Clean, inspect, and apply grease (E) to valve guide, seat, and studs in flange.

4. Replace valve, spring, and spring plate, and secure. **(48)**

5. Check action of valve by pushing open with rod several times. Valve should close by spring action alone.

T. Air-Releasing Mechanism Mk 2

*1. Reseat valve seat and lap valve to seat. Renew valve and lap in, if necessary. **(WE24, 200-441)**

*2. If necessary to replace guide, unscrew old valve guide, applying heat around threads; screw and solder new valve guide into body; reseat valve seat and lap valve to seat. **(WE24, 200-441)**

3. When finished lapping, wash parts thoroughly, oil (C), and assemble valve.

4. Check size of hole in restriction nipple. It should be 0.0625 inch (use No. 52 drill).

5. Clean and replace nipple in valve guide and seat against copper washer. **(18, 141A)**

6. Oil (C) and replace spring support, spring, and adjusting nut.

Note: Before replacing spring, inspect it thoroughly. Renew spring if in doubt about its condition.

7. Connect mechanism to source of high-pressure air (at least 1000 p.s.i.). **(141A)**

8. Hold valve on seat by pulling out on cocking tool; turn air on and test for leaks by submerging in water with the valve seated. **(200-441)**

9. With the above test completed, turn off air pressure and remove air pipe. **(141A)**

10. Relieve any tension on spring by backing off adjusting nut. Replace keep screw. **(41)**

11. See that 0.020-inch hole in top of adjusting-nut cap is clear.

Note: If this hole is clogged, a small leak by the valve may cause premature blowing of the head.

12. Screw cap in place with washer under seat. **(141A)**

13. After overhaul, stow air-releasing mechanism, unless it is used immediately.

U. Air-Releasing Mechanism Mk 3

*1. Reseat valve seat and lap valve to seat. Renew valve and lap in, if necessary. **(WE236, 200-441)**

*2. If necessary to replace guide, unscrew old valve guide, applying heat around threads; screw and solder new valve guide into body; reseat valve seat; lap guide and valve separately, and lap together. **(WE236, WE237, WE238, 200-441)**

3. When finished lapping, wash parts thoroughly, oil (C), and assemble valve.

4. Clean and blow out air channels in valve guide with low-pressure air.

5. Oil (C) and assemble valve in guide.

6. Check size of restriction in valve guide. It should be 1/8-inch in diameter.

7. Clean and replace strainer holder with washer in valve guide. **(451)**

8. Clean and replace strainer in strainer holder.

9. Check size of hole in restriction nipple. it should be about 3/16-inch in diameter.

10. Clean and replace nipple in strainer holder, and seat against copper washer. **(451, 229)**

11. Oil (C) and replace spring support, spring, and adjusting nut.

Note: Before replacing spring, inspect it thoroughly. Renew spring if in doubt about its condition.

12. Connect mechanism to source of high-pressure air (at least 1000 p.s.i.). **(141A)**

13. Turn on air and test for leaks by submerging in water.

14. With the above test completed, turn off air pressure and remove air pipe. **141A)**

15. Relieve any tension on spring by backing off adjusting nut. Replace keep screw. **(41)**

16. See that 0.020-inch hole in top of adjusting nut cap is clear, and screw cap in place with washer under seat. **(141A)**

Note: If this hole is clogged, a small leak by the valve may cause premature blowing of the head.

17. After overhaul, stow air-releasing mechanism, unless it is to be used immediately.

V. Headlight Mechanism

1. Thoroughly clean and inspect all parts. Make certain that all contact sur-

faces are clean and smooth. Make certain that all insulators are free from cracks.

*2. Assemble headlight mechanism:

(a) Replace upper contacts and springs on phenolic top and secure with pins. Peen ends of pins. Solder wires to contacts.

(b) Replace phenolic top assembly on central support rod over insulator.

(c) Replace bottom plate assembly:

(1) Replace insulator and phenolic bottom on bottom plate.

(2) Thread wires through conduits.

(3) Replace bottom plate assembly and conduits. Secure bottom plate assembly to central support rod with key and nut. Drop solder on bottom end of nut, around threads, to prevent nut from turning. (141A)

(4) Solder wires to bottom contacts.

(d) Assemble parts on base plate:

(1) Replace insulator for bulb contact, lining up holes for screws.

(2) Replace bulb contact and secure with screws. (41)

(3) Replace bulb socket and secure with screws. (41)

(4) Solder wire to bulb socket.

(5) Replace switch lever and spring. Secure lever with washers and cotter pin. Replace wire and connection on lever, and secure with nut. (92, 435)

Note: Make certain that contact screw in switch lever is adjusted properly.

(6) Replace inertia weight and spring, and secure with washer and cotter pin. (92)

(e) Replace reflector, holding clips, screws, and nuts in headlight body. (41)

Note: Do not tighten screws at this point. Reflector must be focused. (See step 5, below.)

(f) Replace headlight body on base plate, holding base plate with spanner wrench. (499)

*3. Screw in bulb. See **Note** under step I, 2.

4. Replace batteries.

Note: In the case of new batteries, it may be necessary to fit batteries between contacts.

*5 Focus reflector:

(a) Place headlight assembly on table; trip inertia weight and adjust reflector until headlight throws a three-foot-diameter circle on ceiling six to eight feet above table. Open switch.

(b) After adjustment, tighten screws for holding clips. (41)

6. Screw headlight assembly into casing. Note that good washer is in place.

7. Replace washers and lens. Replace retainer rings and secure with holding screws. (41)

W. Marker-Bomb Switch

1. Remove two nuts securing plunger assembly to switch block. (48)

2. Remove plunger assembly.

3. Check plunger to see that the striker is tight and that knurled end and silver contact are clean and free of verdigris.

4. Note that silver contact and contact spring on switch block are clean and free of verdigris.

5. Check switch leads and terminal screws. Leads should be in good condition and terminal screws tight, with no corrosion present. (41)

6. Replace plunger assembly and note that bend in contact spring is such that it does not interfere with movement of plunger but still makes a good sliding contact with the knurled end of the plunger.

7. Secure the plunger assembly to studs in switch block with two nuts. (48)

8. Stow switch in a safe dry place until ready for use.

X. Battery Assembly

1. Remove two screws, spacer tubes, and nuts securing top plate to base plate. (41)

2. Remove batteries from casing and test with ammeter. Each battery should deliver at least one ampere for sure firing of marker-bomb cartridge.

3. Inspect all contacts and terminals for tightness and freedom from corrosion.

4. Note that battery casing lugs do not touch battery contacts on base plate. Also

note that no corrosion or salt water residue which might cause grounding of the battery contacts is present on the base plate.

5. Replace batteries in casing (one cell right-side-up and the other inverted) and secure with top plate, spacer tubes, screws, and nuts. (41)

Note: If marker-bomb head is not to be used in the immediate future, it is well to leave the batteries out of the casing until time for use.

6. Test battery assembly with ammeter across terminals. Batteries should deliver at least one ampere. If less than one ampere is delivered, check for weak cells or poor contacts.

7. Stow battery assembly with switch assembly until ready for use.

Y. Marker Bomb

1. Remove used cartridge. Remove clamping nut and remove remains of lead sealing disc. (186)

2. Clean interior and exterior of marker-bomb body, with particular attention to beveled seat for flange.

3. Apply a light coating of grease (E) to interior and exterior surfaces of marker-bomb body to prevent corrosion if not to be used immediately.

4. Replace clamping nut, but do not set up tight.

5. Stow marker-bomb with switch and battery assembly.

Exercise head is now ready for final test and installation on air flask. (See Chapter 7.)

Chapter 8—Section 2

AIR-FLASK SECTION

A. Disconnect and Remove Afterbody from Air Flask

1. Blow down flask through flask blow valve. (49)

2. Disconnect the following pipes:

(a) Main air connection from reducer to stop and charging valve. (134)

(b) Pipe from reducer to air checks. (229)

(c) Pipes to fuel and water checks from restriction valve. (144, 229)

(d) Pipe from vent fitting to afterbody. (141A)

3. Remove speed-change upper operating shaft (if present):

(a) Remove holding screws and guide block. (41, 74)

(b) Insert Tool 419 in speed-change upper operating shaft and turn to "between speed" position. (419)

(c) Screw in lifting screw and lift out upper shaft. (74)

4. Screw lifting screws in afterbody handhole covers; install sling around afterbody and take the weight with chain fall. (200-441)

5. Remove joint screws and afterbody. (455)

Note: When the afterbody is in position, the pipe from the combustion flask to the nozzle lies behind the holding screw bosses of the joint ring and the afterbody cannot be withdrawn by a straight pull aft. Standing at the tail facing forward, swing the afterbody to the right until this pipe clears the joint ring bosses. Failure to observe this precaution will result in badly scored pipe and may loosen the bosses.

6. Place afterbody on stand.

B. Test Prior to Disassembly

1. Charge air flask to 800 p.s.i. and test for leaks around the forward bulkhead. Squirt light lubricating oil (C) around the bulkhead joint and note if bubbles appear.

2. Test air-flask blow valve for leaks, using oil (C). (49)

3. In welded air flasks, note if air-vent plug and bushing leak, using oil (C).

4. In welded air flasks, note if air-outlet elbow in forward dome leaks, using oil (C).

5. With main air nipple blanked off, oper-

ate stop valve to open and close, and note leaks. (227-227A)

6. Note if charging check valve leaks. (13-14)

7. Open air-flask blow valve and bleed air from air flask until empty. (49)

DISASSEMBLE AIR FLASK

C. Remove Air-Check-Valve Assembly

1. Remove pipes from check valve to water compartment bulkhead. (229)
2. Remove pipe to vent fitting. (141A)
3. Remove holding screws and check valve assembly. (41)

D. Remove Fuel and Water Check Valve and Strainer Assembly

1. Remove pipe from water compartment bulkhead to fuel strainer. (144)
2. Remove pipe from water compartment bulkhead to water strainer. (229)
3. Remove pipe to vent fitting. (141A)
4. Remove holding screws and check valve and strainer assembly. (41)

E. Remove Stop and Charging Valve

1. Disconnect main air pipe at water compartment bulkhead. (134)
2. Remove holding screws and stop and charging valve. (41)

F. Remove Vent Fitting

1. Remove holding screws and vent fitting. (41)

G. Remove Water Compartment Bulkhead Assembly

1. Remove water and fuel filling plugs. (11, 74, 217)
2. Unscrew clamp nut for main air connection through water compartment bulkhead. (241A-242A)
3. Back off on lock nuts on water-compartment air-inlet and water-outlet clamping nipples. (144)
4. Remove clamping nipples. (144)
5. Remove water-compartment bulkhead holding screws. (12)
6. Insert lifting handles and remove water-compartment bulkhead assembly.

Note: It may be necessary to tap around joint with lead hammer to loosen white lead.

H. Remove Forward Air-Flask Bulkhead—Forged Flask

1. Remove pipe from blow valve body to exercise head. (404)
2. Disconnect pipe from air flask to blow valve at blow valve. (404)
3. Remove holding screw and blow valve. (41)
4. Insert eye bolt in threaded holes in bulkhead. (234)
5. Remove bulkhead holding screws. (135A)
6. Push bulkhead clear of seat; rotate bulkhead, and, with flats lining up with slots in seat of flask, slide head out clear.

Note: It is extremely important to protect the bulkhead and flange seats from the slightest damage during overhaul.

I. Remove Forward Air-Flask Bulkhead—Welded Flask

1. Loosen clamp nut; remove locating clamp; and replace clamp nut on stud in forward bulkhead. (150)
2. Attach piece of wire or heavy string to clamp bolt under clamp nut and holding string (or wire) in one hand, to prevent forward bulkhead from falling inside air flask; push forward bulkhead aft to break seat.
3. Turn flats in bulkhead to line up with slots in air-flask forward dome, and remove forward bulkhead.

J. Remove Flask Blow Valve—Welded Flask

1. Disconnect pipe from air flask to blow valve at blow valve. (404)
2. Remove pipe to exercise head. (404)
3. Remove holding screw and blow valve from flask. (41)

*K. Remove Pipe from Air Flask to Blow Valve—Forged Flask

1. Straighten bend in pipe sufficiently to unscrew.
2. Saturate a rag with water and pack on forward flask head seat in wake of pipe. Apply sufficient heat around threads to run solder and unscrew pipe. (Excessive heat may warp bulkhead seat out of line and cause a leak.) (314)

***L. Remove Pipe from Air Flask to Blow Valve—Welded Flask**

1. Unscrew nut from air-outlet elbow in forward dome and remove pipe. (404)

***M. Remove Air-Outlet Elbow in Forward Dome—Welded Flask**

1. Apply heat and clean off solder around outside of elbow.
2. Apply heat to soften solder on elbow threads, and unscrew elbow.

***N. Remove Main Air Connection from After Bulkhead**

1. Back off clamp nut and remove main air pipe assembly through forward end of flask. (241A-242A)

Note: In the case of a welded air flask, a long hardwood stick may be used for this purpose.

***O. Remove Air Vent Bushing and Plug—Welded Flask**

1. Remove keep screw. (37)
2. Remove bushing and plug. (8-9)
3. Unscrew plug from bushing. (400-B)

The above completes the disassembly of the Air-Flask Section.

OVERHAUL, ASSEMBLY AND TESTS

P. Treat Interior of Air Flask—Forged Flask

1. Clean thoroughly of oil and examine for corrosion. If corrosion or discoloration is noted, the surface must be scrubbed with a suitable grease solvent, using a stiff bristle brush, and thoroughly dried. Use of alkalies, gasoline (or other volatile liquids) for cleaning is forbidden. When flask is thoroughly dry, give all electroplated surfaces a light coating of preservative (J).

Q. Treat Interior of Air Flask—Welded Flask

1. Clean interior thoroughly with hot water by swabbing with stick and rag. Blow flask dry.

Note: No preservative should be applied to interior of welded flask.

***R. Replace Main Air Connection on After Bulkhead**

1. Apply a thin coat of a mixture of 75 per cent pure strained white lead and 25 per cent light lubricating oil (C) to lapped surface of nipple and after head.
2. Insert main air connection in bulkhead through forward end.

Note: In the case of a welded air flask, a long hardwood stick may be used for this purpose.

3. Slip clamp nut in place over after end of pipe and secure. (241A-242A)

S. Replace Forward Bulkhead—Forged Flask

*1. Apply carborundum grinding compound mixed with oil (C) sparingly around seat on bulkhead.

*2. Insert bulkhead through slots in air-flask seat and pull bulkhead up to its seat in flask, catching one holding screw to hold in place until ready to grind. (135A)

*3. Install a bar through the eye bolts and loop a piece of 21-thread manila rope around this bar and the back of the operator to obtain pressure on seat, and proceed to grind bulkhead to its seat, wiping and inspecting occasionally until a good seat is obtained all around.

*4. Remove rope and bar.

5. Clean and dry ground seats thoroughly with a suitable grease solvent (do not use lye or other alkali, gasoline, or volatile oils) and apply a mixture of 75 per cent pure strained white lead and 25 per cent light lubricating oil (C) to both seats.

6. Insert bulkhead through slots in air-flask seat and pull bulkhead up on its seat with numbers stamped uppermost; line up to holes and proceed to secure with ten holding screws coated with oil (D). (It is sometimes necessary to run a 5/16 inch x 24 die over the holding screws to secure a proper fit.) (135A)

7. Remove eye bolts. (234)

***T. Replace Air-Outlet Elbow in Forward Dome—Welded Flask**

1. Remove baked coating (Heresite) around tapped hole for elbow.

2. Thoroughly clean threads on elbow and in tapped hole, using tap and die.

(5/16-18NC-2)

3. Tin threads on elbow and in tapped hole.

Note: When tinning threads in tapped hole, take care not to plug hole in dome or let solder run into air flask.

4. Heat elbow and tapped hole until

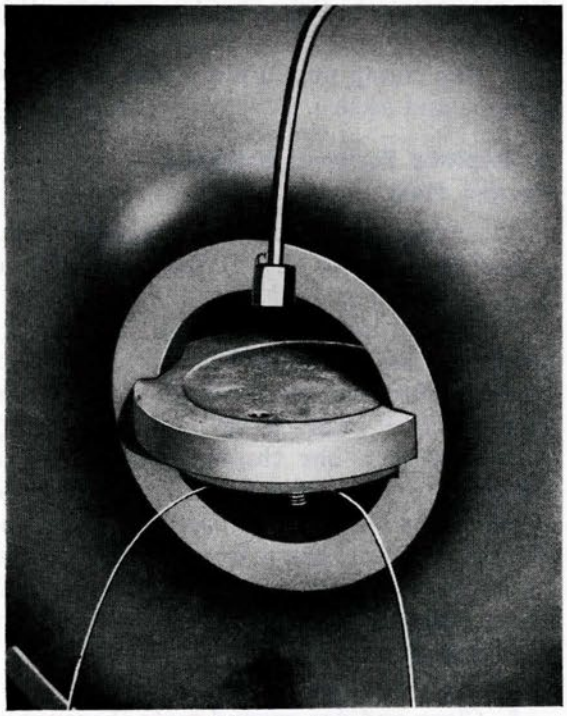

Figure 134A

solder is just fluid, and screw elbow into tapped hole.

5. When elbow is in place, run a small fillet of solder around joint.

6. Touch up, with air-drying Heresite, the area on forward dome which was cleaned for soldering.

Note: If elbow leaks after it has been replaced as outlined above, proceed as follows:

7. Remove elbow and clean parts.

8. Run die over threads on elbow to increase length of threads and enable bottom of elbow to seat in dome. Replace elbow.

9. If elbow, when seated, does not line up with pipe to air flask blow valve, remove elbow, dress off bottom of elbow, and replace.

U. Replace Forward Bulkhead—Welded Flask

*1. Apply carborundum grinding compound mixed with oil (C) sparingly around seat on bulkhead.

*2. Insert bulkhead through slots in air-flask seat and pull bulkhead up to its seat, using wire or heavy string.

*3. Install grinding tool and proceed to

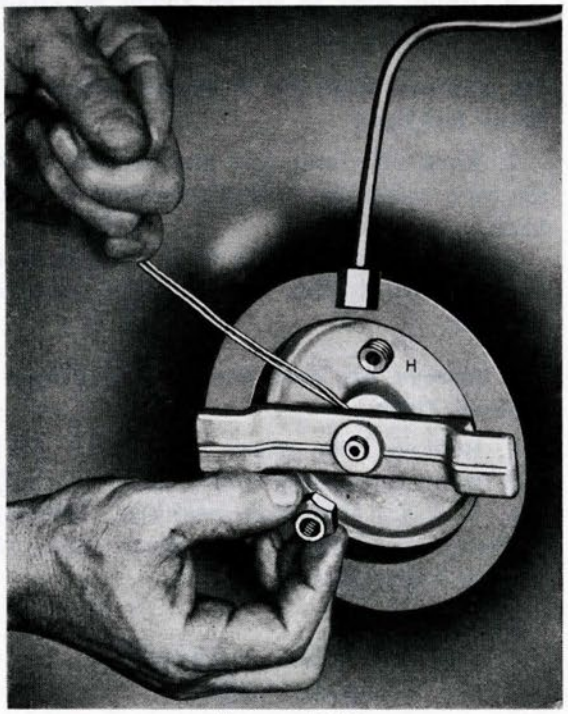

Figure 134B

grind bulkhead to its seat, wiping and inspecting occasionally until a good seat is obtained all around.

Note: Grinding tool should be made by activity performing this operation.

*4. Remove grinding tool.

5. Clean and dry ground seats thoroughly with a suitable grease solvent (do not use lye or other alkali, gasoline, or volatile oils) and apply a mixture of 75 per cent pure strained white lead and 25 per cent light lubricating oil (C) to both seats.

6. Secure wire to clamp bolt in bulkhead and insert bulkhead through slots into flask (Fig. 134A).

7. Rotate bulkhead about 90 degrees so flats are not in alignment with slots in

seat, and pull up to seat with wire (Fig. 134B).

8. Replace locating clamp, making sure that it seats in channel in bulkhead and slots in bulkhead seat.

9. Assemble clamp nut with shoulder of nut outboard. (150)

***V. Replace Pipe from Air Flask to Blow Valve—Forged Flask**

1. Clean tapped hole in flask bulkhead flange with 5/16-inch-20 bottoming tap.

2. Tin threaded end of pipe and tapped hole.

3. Apply enough heat on flange to run solder, and screw pipe in place. (314)

4. After resoldering, see that hole in pipe is clear of solder.

***W. Replace Pipe from Air Flask to Blow Valve—Welded Flask**

1. Replace pipe; bend to shape if necessary; and secure to air-outlet elbow in forward dome. (404)

X. Flask Blow Valve

1. Disassemble valve by removing set screw, retainer, washer, and valve. (37, 155)

2. Clean and inspect blow valve body and parts. Remove burrs, where necessary, on nipples and in blow valve seat. Apply oil (C) to valve.

3. Replace new washer around blow-valve stem and assemble blow valve in body. (49)

4. Replace retainer over blow-valve stem and secure with set screw. (155, 37)

5. Replace blow valve on air flask and secure with screw. (41)

6. Connect pipe from air flask to blow valve. (404)

***Y. Air-Vent Bushing and Plug—Welded Flask**

1. Wash all parts thoroughly.

2. Examine threads on bushing (screw to "open" position). (400B)

3. Replace plug and bushing assembly and secure with keep screw. (400B, 8-9, 37)

4. Tighten down plug. (400B)

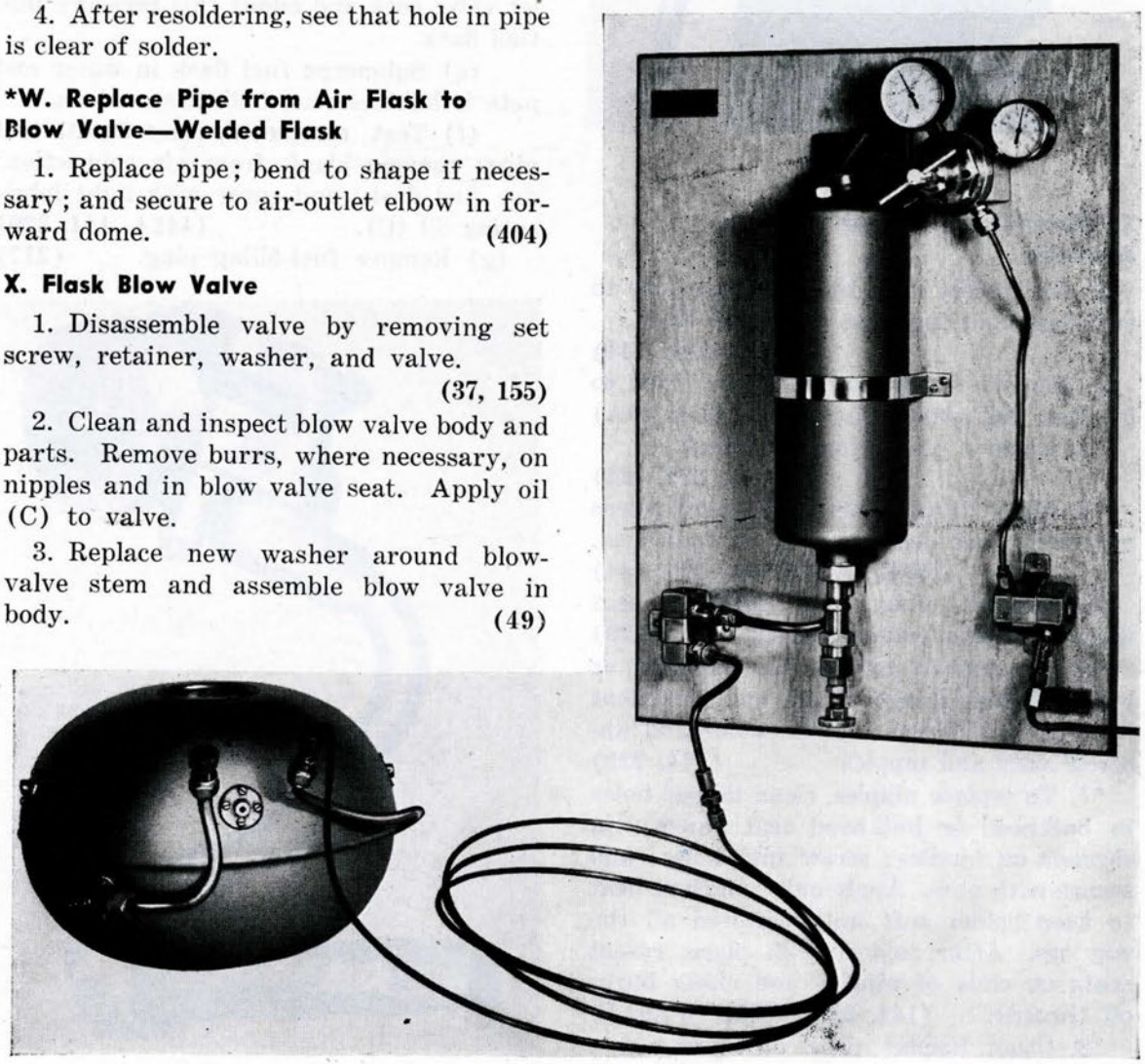

Figure 135



Figure 136

Z. Water-Compartment Bulkhead Assembly

1. Disconnect from bulkhead, air pipe to fuel flask and fuel pipe from fuel flask. **(229, 144)**

2. Remove screws securing fuel flask to bracket, and remove fuel flask. **(49 or 49A)**

*3. Remove pipes from fuel flask. **(229, 144)**

*4. Clean, inspect, dress off burrs where necessary, and replace pipes on fuel flask. **(WE 94, WE94A, 229, 144)**

*5. Remove pipes from bulkhead seat flange in water compartment. **(229)**

*6. To remove nipples in bulkhead or bulkhead-seat flange, apply only sufficient heat to each nipple to run solder and unscrew nuts and nipples. **(144, 229)**

*7. To replace nipples, clean tapped holes in bulkhead or bulkhead seat flange; tin threads on nipples; screw into holes; and secure with nuts. Apply only sufficient heat to keep solder soft until screwed all the way up. After soldering in place, reseat seats on ends of nipples and chase burrs off threads. **(144, 229, WE94, WE94A)**

*8. Clean, inspect, dress off burrs where necessary, and replace pipes on nipples in bulkhead-seat flange in water compartment. **(229)**

9. Test fuel flask for leaks (Fig. 135).

(a) Replace fuel-filling plug. **(217)**

(b) Blank off air-inlet pipe. **(229)**

(c) Connect a test pipe from fuel-outlet connection to outlet-valve cock for Spray, Check Valve, and Fuel Flask Testing Outfit (described in OP 1217). The test pipe must be of sufficient length to permit submerging the fuel flask in water. No water should be used in test tank of testing outfit when testing fuel flask. **(141A, 144)**

(d) Open low-pressure air valve and adjust reducing valve to 25 p.s.i. Open outlet valve cock and admit this pressure into fuel flask.

(e) Submerge fuel flask in water and note if bubbles rise, indicating a leak.

(f) Test completed, disconnect test pipe; remove blank from air connection; dry fuel flask; and cover with light lubricating oil (C). **(141A, 144, 229)**

(g) Remove fuel-filling plug. **(217)**

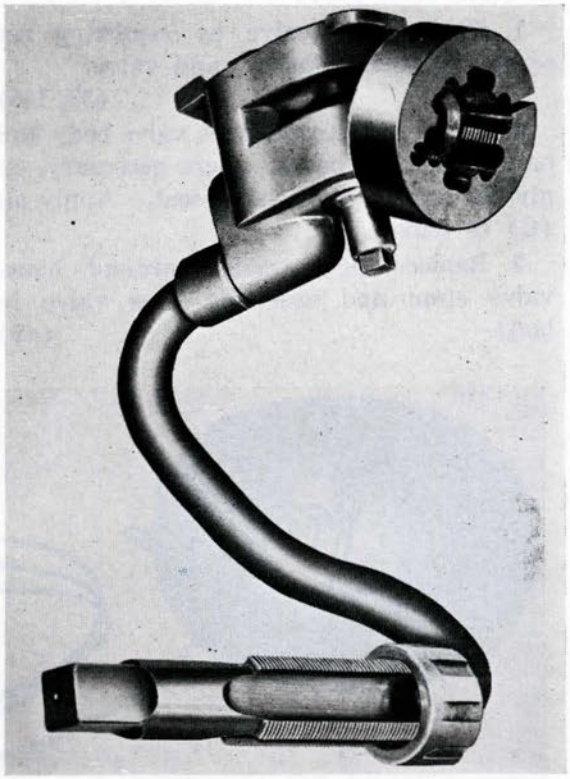

Figure 137

10. Replace fuel flask on brackets and secure with screws. **(49 or 49A)**

11. Connect pipes on fuel flask to water compartment bulkhead. **(144, 229)**

12. Clean bulkhead and flange seats, including tapped screw holes, and apply a mixture of 75 per cent pure strained white lead and 25 per cent oil (C) to seats.

13. Clean interior of water compartment and apply a light coat of preservative (J).

14. Install water-compartment bulkhead assembly, guiding main air-connection nipple through hole in bulkhead, and secure with holding screws dipped in oil (D). **(12)**

15. Replace clamping nipples and lock nuts for pipe from air checks to water space and pipe from water space to water strainer. **(144)**

16. Screw clamp nut over main air-connection nipple and secure. **(241A-242A)**

AA. Vent Fitting

1. Inspect threads of nipples for burrs; blow out channels with low-pressure air and assemble to shell, securing with holding screws. **(41)**

AB. Stop and Charging Valve

Caution: When clamping valve body in vise, use copper vise jaws and take care not to crush or distort valve body.

1. Remove charging-valve plug and ring seal. **(13-14)**

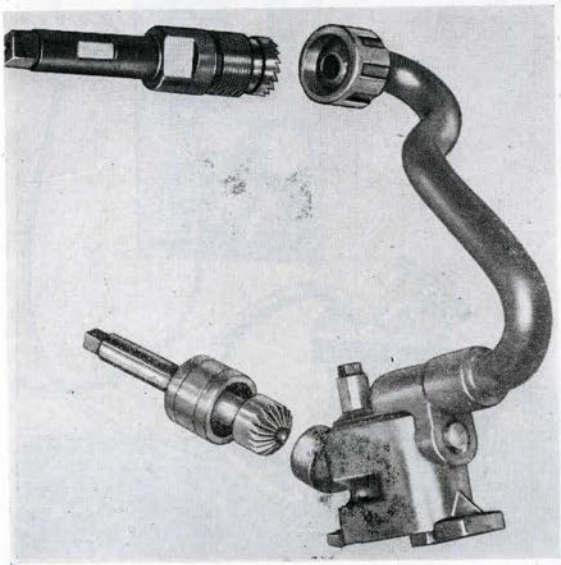

Figure 138

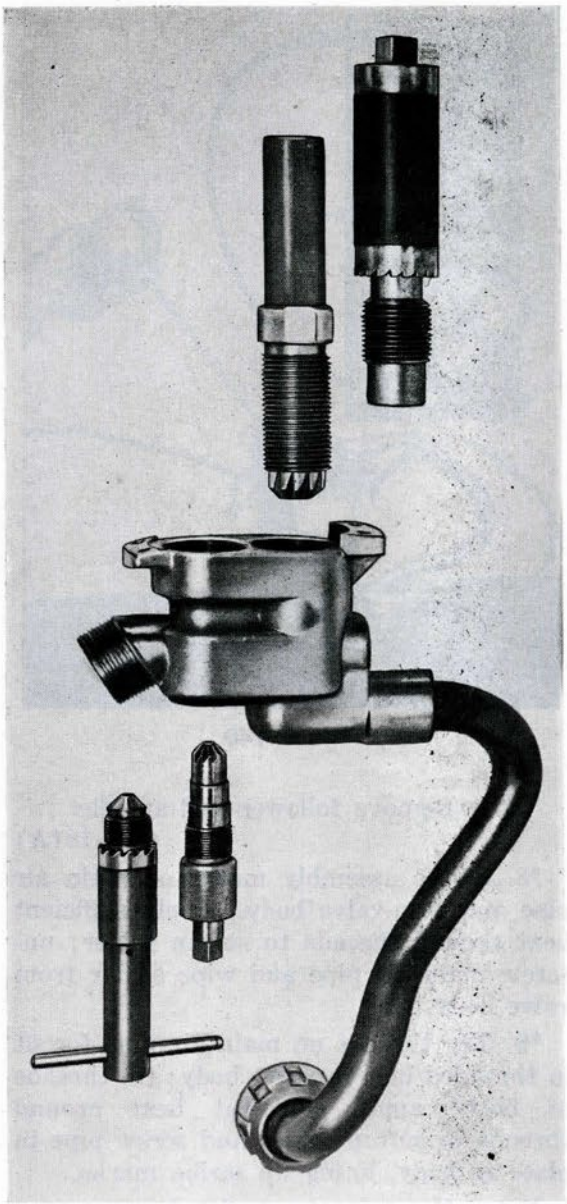

Figure 139

2. Remove check valve guide, ring seal, check valve, and spring. **(12)**

*3. Remove keep screw and bushing for charging valve (Fig. 136). **(37, 420, 377)**

4. Remove gland nut and ring seal from stop valve plug. **(418)**

5. Remove stop valve plug, spindle with follower, and ring seal. **(183)**

6. Remove stop valve and carrier. **(405)**

*7. Remove stop valve operating spindle:

(a) Remove set screw from follower. **(37)**

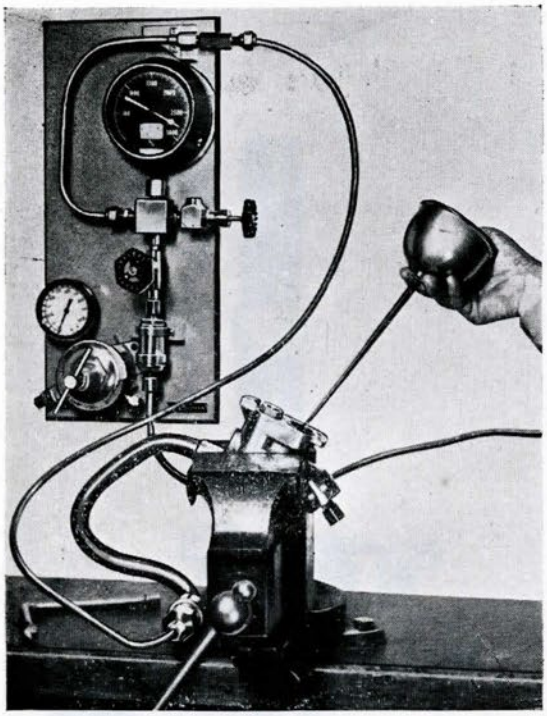

Figure 140

(b) Remove follower and spindle. **(181-181A)**

*8. Scribe assembly marks on main air pipe and stop-valve body. Apply sufficient heat around threads to soften solder; unscrew main air pipe and wipe solder from valve body.

*9. Try threads on main air pipe for fit in threaded hole in valve body; tin threads of both; apply sufficient heat around threads to soften solder and screw pipe in place in body, lining up scribe marks.

Note: If a new pipe is fitted, screw pipe into valve body without soldering. Install valve group on air flask and secure in place. Fit main air pipe to line up with main air nipple in center of water-compartment bulkhead and scribe marks on pipe and stop-valve body; remove and solder in place as described above.

*10. Chase threads in main air-pipe nut and on outlet nipple to reducer (Fig. 137). **(WE97, WE98)**

*11. Reface seat on main air-pipe collar, and seat on outlet nipple (Fig. 138). **(WE81, WE80)**

*12. Reseat charging check valve seat (Fig. 139). **(WE46)**

*13. Lap charging check valve to seat. **(41)**

14. Inspect check-valve guide and its seat in valve body for burrs and corrosion.

*15. Reseat check valve-guide seat in valve body (Fig. 139). **(WE113)**

16. Replace charging check valve, spring, ring seal, and guide. **(12)**

Note: Before replacing check valve guide, make certain that stop pin in guide is tight.

*17. Screw new charging valve bushing in place; mark place opposite keep screw hole; remove bushing and, with small round file, remove sufficient stock on bushing to correspond with half of hole drilled before tapping. Replace bushing in valve body with hole for keep-screw lining up; run a drill into hole and follow up with a tap. Insert keep screw for bushing. **(420, 377, 37)**

*18. Reface stop valve seat. (Fig. 139) **(WE41)**

*19. Lap stop valve to seat. Apply lapping compound sparingly; screw stop valve and carrier down to seat, but not hard

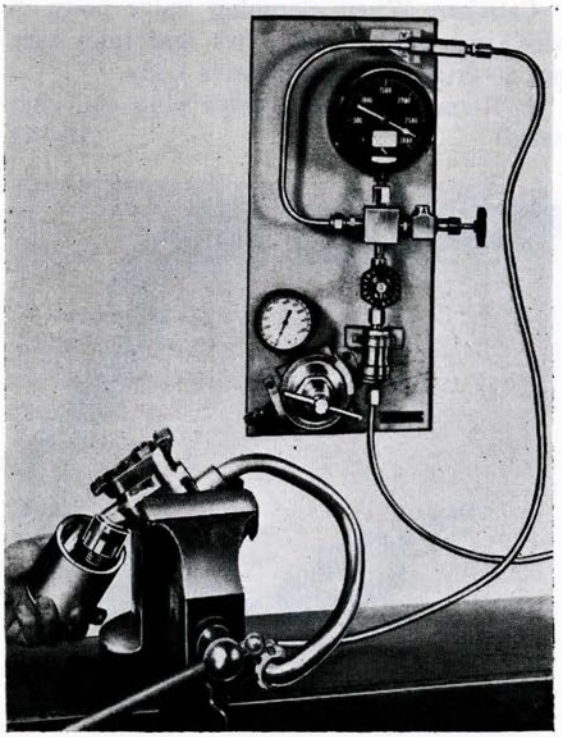

Figure 141

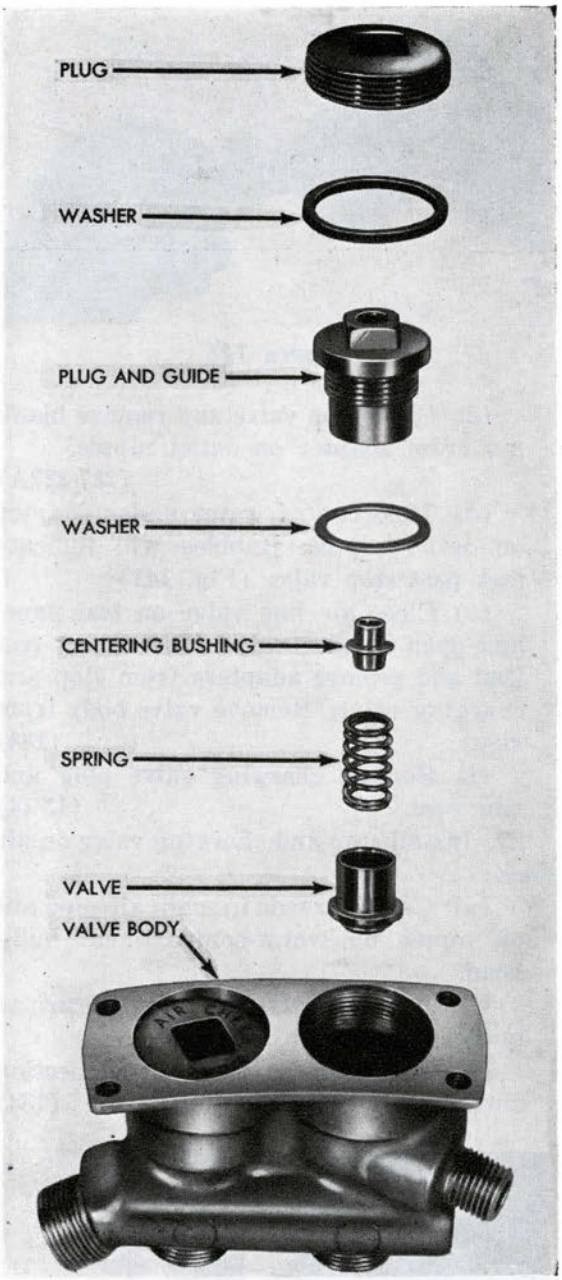

Figure 142

enough to take up. Insert a screw driver through carrier to slot in stop valve and grind until seated. Wash grinding compound from seat. **(405, 41)**

Note: This step not necessary in the case of stop valves with nylon insert.

*20. Reface stop valve plug seat (Fig. 139). Wash out chips and blow dry. **(WE42)**

*21. Clean, inspect, remove burrs, and lap stop valve spindle to seat in plug. Oil (C) lightly and assemble spindle, follower, and keep screw in plug **(181-181A, 37)**

22. Test stop valve plug seat and stop valve spindle seat for leaks:

(a) Clamp valve body in vise.

(b) With stop valve removed, replace (temporarily) ring seal and stop-valve plug assembly in valve body. **(183)**

(c) Install adapter and blank on outlet nipple on valve body. **(134)**

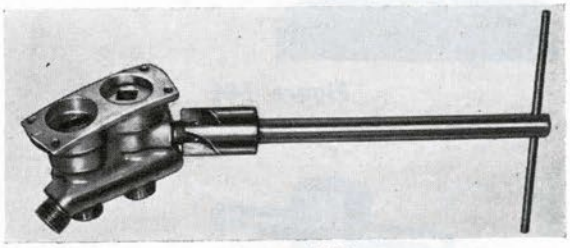

Figure 143

(d) Install adapter and connect test lead from main air pipe to General Use Test Panel. **(SG-2348)**

(e) Crack air-line valve; gradually build up pressure in valve body to 2800 p.s.i. and test for leaks around stop valve plug seat and stop valve spindle seat, using oil (C). Turn off air and bleed line. Do not remove adapters or pipe connections.

(f) Remove stop-valve plug assembly and ring seal. **(183)**

(g) Remedy leaks if any were found in step (e) above.

23. Clean, oil (C) lightly, and install stop valve carrier with stop valve. **(405)**

24. Replace ring seal and stop valve plug assembly in valve body. **(183)**

25. Replace ring seal and gland nut in stop valve plug. **(418)**

26. Test assembled stop and charging valve:

(a) With adapters and pipe connection still on valve body, close stop valve, turn on air (2800 p.s.i.) and open stop valve slowly. **(227-227A)**

(b) Squirt oil (C) around charging check valve seat and watch for bubbles (Fig. 140).

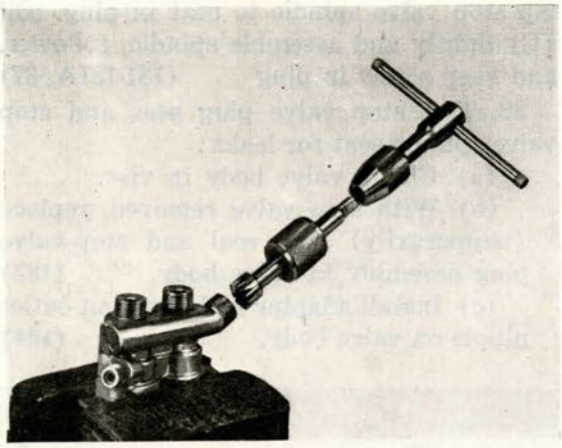

Figure 144

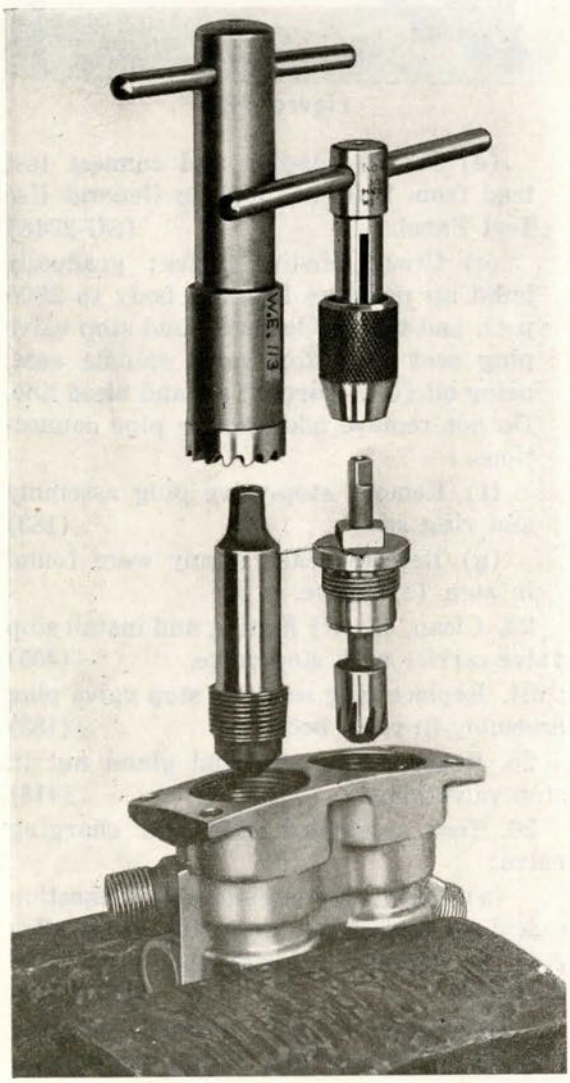

Figure 145

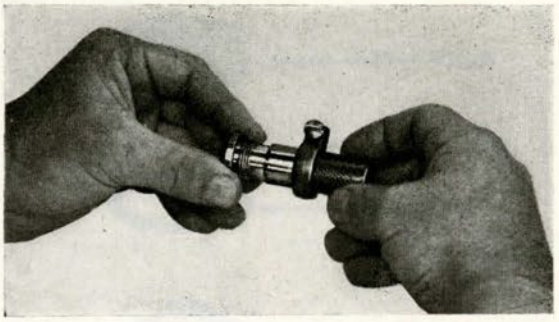

Figure 146

(c) Close stop valve and remove blank nut from adapter on outlet nipple. (227-227A)

(d) Hold can of water under adapter on outlet nipple. Bubbles will indicate leak past stop valve (Fig. 141).

(e) Close air line valve on test panel and open bleeder valve. Disconnect test lead and remove adapters from stop and charging valve. Remove valve body from vise. (134)

(f) Replace charging valve plug and ring seal. (13-14)

27. Install stop and charging valve on air flask:

(a) Catch threads in main air pipe nut on nipple on water-compartment bulkhead.

(b) Line up valve body and secure to midship shell with screws.

(c) Fully tighten main air-connection nut. (134)

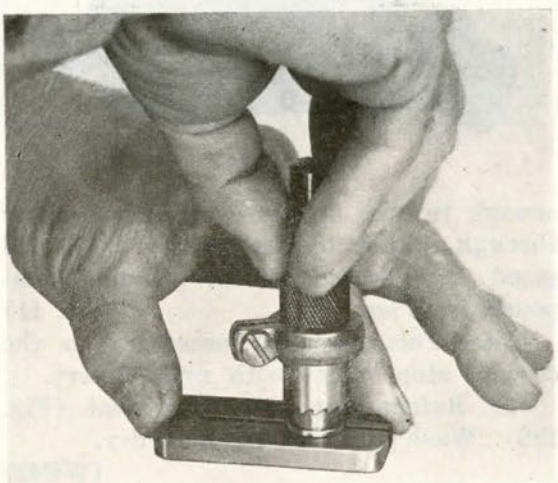

Figure 147

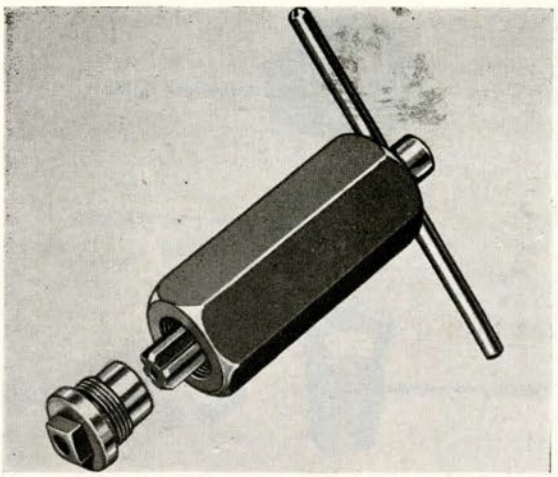

Figure 148

AC. Leakage Test After Assembly

1. Charge air flask to 800 p.s.i. and test for leaks around the forward bulkhead. Squirt oil (C) around the bulkhead joint and note if bubbles appear.

2. Test air-flask blow valve for leaks, using oil (C). **(49)**



Figure 149

3. In welded air flasks, note if air-vent plug and bushing leak, using oil (C).

4. In welded air flasks, note if air-outlet elbow in forward dome leaks, using oil (C).

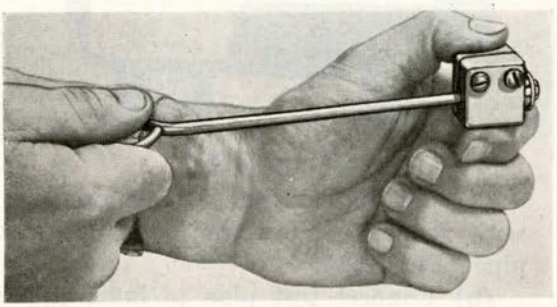

Figure 150

5. With main air nipple blanked off, open and close stop valve and note leaks. **(227-227A)**

6. Note if charging check valve leaks. **(13-14)**

7. Open air-flask blow valve and bleed air from air flask until empty. **(49)**

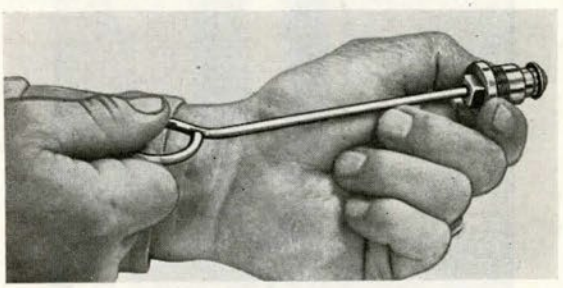

Figure 151

AD. Air Check Valves (Fig. 142)

1. Remove plugs and washers for check-valve body. **(405)**

2. Remove check-valve plug and guide with centering bushing, check valve, and spring. **(12, 74)**

*3. Chase threads on nipples (Fig. 143). **(WE94, WE95)**

*4. Reface seats on nipples (Fig. 144). **(WE83, WE86, 443)**

*5. Reseat seats for valves, using air check-valve plug and guide for guiding tool when cutting (Fig. 145). **(WE108)**

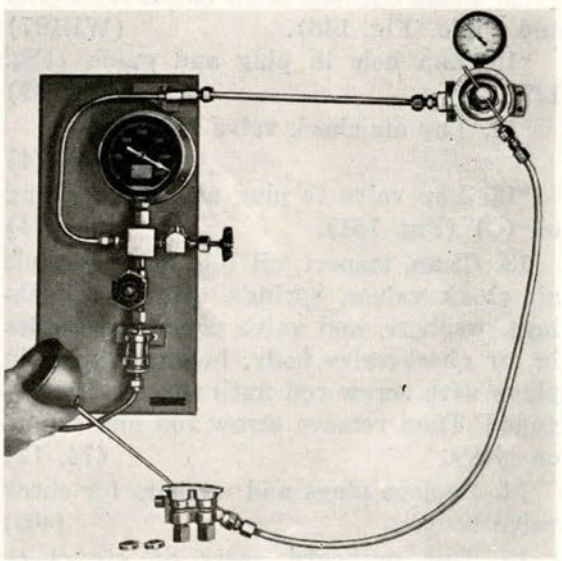

Figure 152

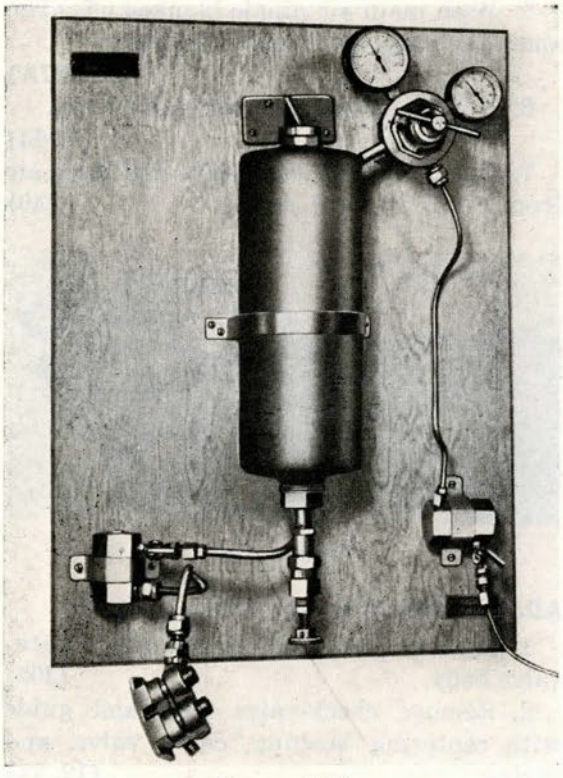

Figure 153

*6. Reseat seat for air check-valve plug washer (Fig. 145). **(WE113)**

*7. Reseat bottom seat of valve plug and guide (Fig. 146). **(WE111)**

*8. Reseat upper flat seat on valve (Fig. 147). **(WE111, WE112)**

*9. Ream out hole in air check-valve plug and guide (Fig. 148). **(WE107)**

*10. Lap hole in plug and guide (Fig. 149). **(WE109)**

*11. Lap air check valve (Fig. 150). **(WE110, 74)**

*12. Lap valve to plug and guide, using oil (C) (Fig. 151). **(74)**

13. Clean, inspect, oil (C), and assemble air check valves, springs, centering bushings, washers, and valve plugs and guides in air check-valve body, holding valves in plugs with screw rod until threads are engaged. Then remove screw rod and set up on plugs. **(74, 12)**

14. Replace plugs and washers for check valve body. **(405)**

15. Test outboard seats of air check valves as follows:

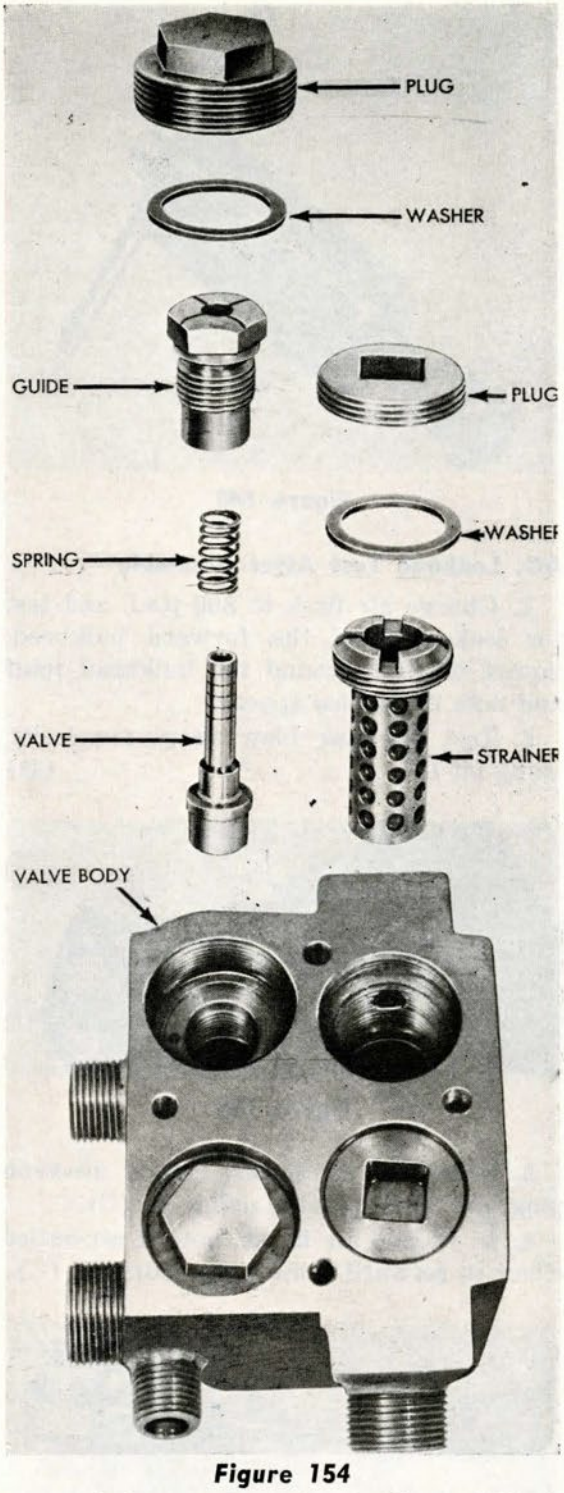

Figure 154

(a) Set up Test Panel (General Use) with reducer and extra length of test pipe (Fig. 152).

(b) Connect test pipe to inlet nipple of air check-valve body. **(229)**

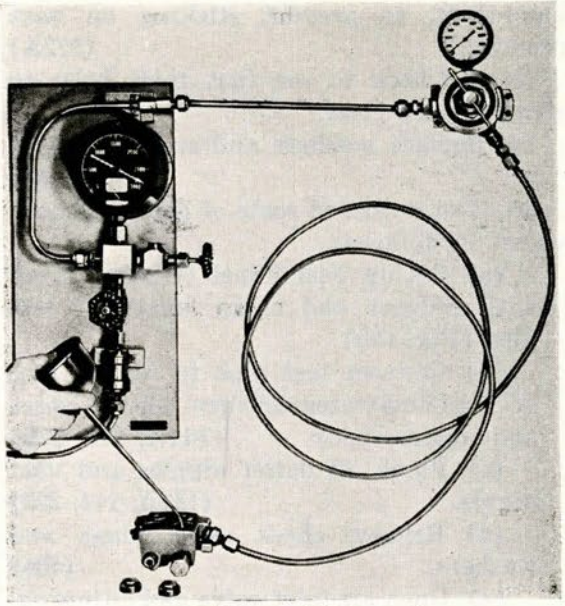

Figure 155

(c) Blank off outlet nipples and vent nipple. **(229, 141A)**

(d) Remove screw plugs and washers from air check-valve body. **(405)**

(e) Open inlet valve and adjust reducer to give 350 p.s.i.

(f) Fill check-valve body with oil (C) and check for leaks.

(g) After satisfactory test has been made (no leaks), remove blanking nuts from outlet nipples and vent nipple; replace screw plugs and washers. Disconnect and remove body from test panel. **(141A, 405, 229)**

16. Test inboard seats of air check valves as follows (Fig. 153):

(a) Drain bottle of Spray, Check Valve, and Fuel Flask Testing Outfit and blow clean with low-pressure air.

(b) Connect inlet nipple of air check-valve body to outlet pipe of testing outfit. **(229)**

(c) Open valve cock, admitting low-pressure air (not exceeding 200 p.s.i.) to the reducing valve.

(d) Adjust reducing-valve pressure upward slowly, noting pressure required to lift check valves off their seats. The valves should lift at from 10 to 12 p.s.i.

(e) Disconnect and remove air check-valve body from testing outfit. **(229)**

17. Remove, wipe dry, oil (C), and replace check valves after test. **(405, 12, 74)**

18. Install body on air flask with holding screws, and connect pipes. **(41, 229, 141A)**

AE. Fuel and Water Delivery Check Valves and Strainers (Fig. 154).

1. Remove plugs and washers for strainers and remove strainers. **(405, 372A)**

2. Remove plugs and washers for fuel and water check valves. **(406)**

3. Remove valve guides with valves and springs. **(74, 407)**

*4. Chase threads on nipples. **(WE94, WE94A, WE95)**

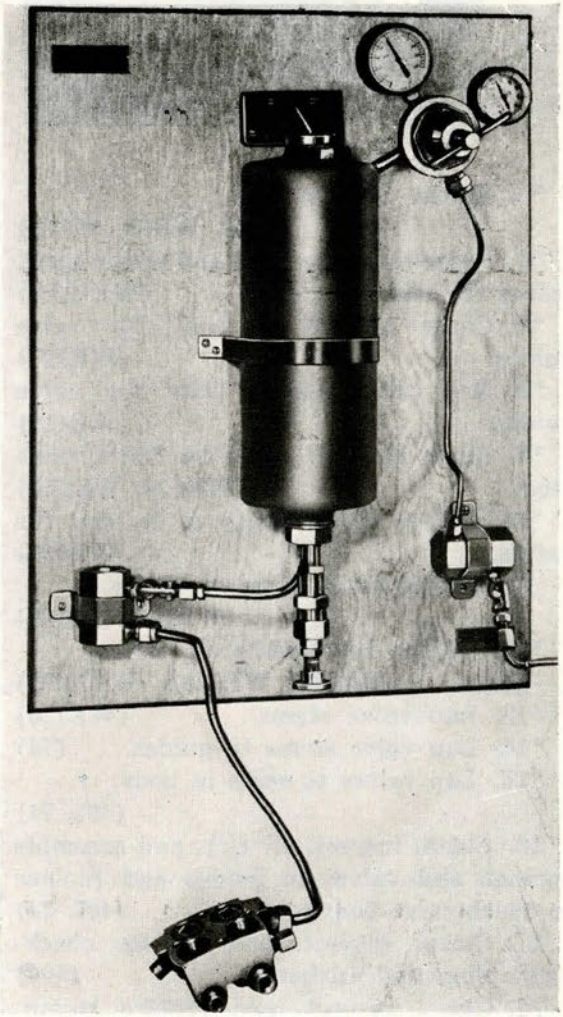

Figure 156

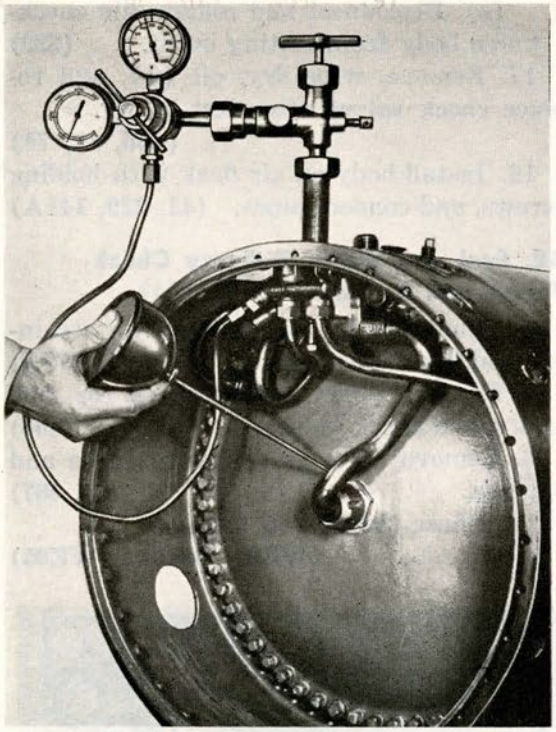

Figure 157

*5. Reseat nipples. **(WE83, WE85, WE87)**

*6. Reface seats for fuel and water check valves in body. **(WE123A)**

*7. Chase threads in body for valve guides. **(WE117)**

*8. Mill out holes in body for valve guides. **(WE119)**

*9. Ream holes in guide for check valve stem. **(WE120, WE124)**

*10. Reface outer seats of guides for valves. **(WE121)**

*11. Reface outer seats of valves. **(WE122, WE127)**

*12. Reface bevel seats on valves. **(WE128, WE128A, WE128B)**

*13. Lap valve stems. **(WE126)**

*14. Lap valve stems to guides. **(74)**

*15. Lap valves to seats in body. **(407, 74)**

16. Clean, inspect, oil (C), and assemble springs and valves in guides and replace in check-valve body. **(407, 74)**

17. Clean, inspect, and replace check-valve plugs and washers. **(406)**

18. Clean, inspect, and replace strainers. (Do not set up strainers more than hand-tight, to prevent sticking on next removal.) **(372A)**

Note: Check to see that inlet holes to strainers are clear.

19. Replace washers and strainer plugs. **(405)**

20. Test outboard seats of delivery check valves as follows:

(a) Set up Test Panel (General Use) with reducer and extra length of test pipe (Fig. 155).

(b) Connect test pipe to inlet nipple of fuel-and-water-delivery check valve and strainer body. **(141A, 144, 229)**

(c) Blank off outlet nipples and vent nipple. **(141A, 144, 229)**

(d) Remove check valve plugs and washers. **(406)**

(e) Open air inlet valve and adjust reducer to give 350 p.s.i.

(f) Fill check-valve body with oil (C) and check for leaks.

(g) After satisfactory test has been made (no leaks), remove blanking nuts from outlet nipples and vent nipple; replace check-valve plugs and washers; disconnect and remove body from test panel. **(229,144, 144A, 406)**

21. Test inboard seats of delivery check valves as follows (Fig. 156):

(a) Drain bottle of Spray, Check Valve, and Fuel Flask Testing Outfit, and blow clean with low-pressure air.

(b) Connect inlet nipple of body to outlet pipe of testing outfit. **(144, 229)**

(c) Open valve cock, admitting low-pressure air (not exceeding 200 p.s.i.) to the reducing valve.

(d) Adjust reducing-valve pressure upward slowly, noting pressure required to lift check valves off their seats. The valves should lift at from 15 to 20 p.s.i.

(e) Disconnect and remove body from testing outfit. **(144, 229)**

22. Remove check valves and strainers after test, wipe dry, oil (C) check valves, and replace check valves and strainers. **(74, 405, 406, 407)**

23. Install body on air flask with holding screws and connect pipes. **(41, 141A, 144, 229)**

Chapter 8—Section 3

AFTERBODY—REMOVAL OF MAJOR UNITS FROM

A. Remove Gyro and Depth Mechanism

1. Turn afterbody bottom-up and remove hand-hole plates with gaskets. (200-441, 48)
2. Remove cotter pins, retainer pins, and lock pins for spreaders (for forward gyro index gear assemblies). (72)
3. Swing spreaders and struts clear of and remove forward gyro index gear assemblies.
4. Remove two connecting pins for forks and rudder rods. (449)
5. Disconnect air pipe to depth engine. (141A)
6. Disconnect air pipe to steering engine. (141A)
7. Remove air pipe from "T" connection on steering engine to gyro reducing valve. (24)
8. Disconnect valve connections and remove depth and steering engines. (205A-246, 49A)
9. Disconnect water pipe from depth-mechanism casing and turn clear. (144)
10. Disconnect gyro spin lead. (437)
11. Remove gyro clamp-plate cover and gasket; lock gyro spinning and unlocking mechanism; replace gyro clamp-plate cover and gasket. (13-14, 205A-246)
12. Install transportation pin. (49)
13. Remove holding screws, install lifting screws, and remove gyro and depth mechanism. (456, 200-441)

B. Remove Tail

1. Remove after propeller nut-lock screws. (40)
2. Remove after propeller nut (right-hand thread), tapping with lead hammer if necessary. (426)
3. Remove after propeller, tapping close to hub with lead hammer if necessary.

*4. Remove grease shell from after propeller sleeve:

Note: This step applies only to those torpedoes which have the improved tail lubricating system installed.

(a) Remove set screw holding grease shell in place. (400)

(b) Insert hooks into two holes in after portion of grease shell and pull shell out of sleeve.

5. Remove nut, after propeller sleeve, and bushings. (183)
6. Remove forward propeller-nut lock screws. (40)
7. Remove forward propeller nut (left-hand thread), tapping with lead hammer if necessary. (425)
8. Remove forward propeller, tapping with lead hammer if necessary.
9. Remove forward propeller hub, and pry out key, noting marks. (41)
10. Remove access hole plugs from tail cone. (13-14)
11. Remove two screws for rudder connecting rod ends. (13-14, or 386)
12. Remove joint screws, and remove tail. (184)
13. Remove wire and locking screws for forward propeller sleeve. (72, 40)
14. Remove forward propeller sleeve.
15. Remove wire, three holding screws, and grease-packing ring from forward propeller sleeve. (72, 41)

C. Disassemble Parts on Turbine Bulkhead

Disconnect and remove parts attached to the turbine bulkhead in the following order:

1. Water pipe to restriction valve. (229)
2. Fuel pipe to restriction valve. (144)
3. Vent pipe to bulkhead. (141A)
4. Water pipe, midship section to bulkhead. (141A, 457)
5. Air pipe from reducing valve (to air check valves). (229)
6. Air pipe, reducing valve to igniter. (141A)
7. Air pipe, bulkhead to reducing valve (return from starting gear). (141A)
8. Air pipe, reducing valve to bulkhead (control valve). (141A)

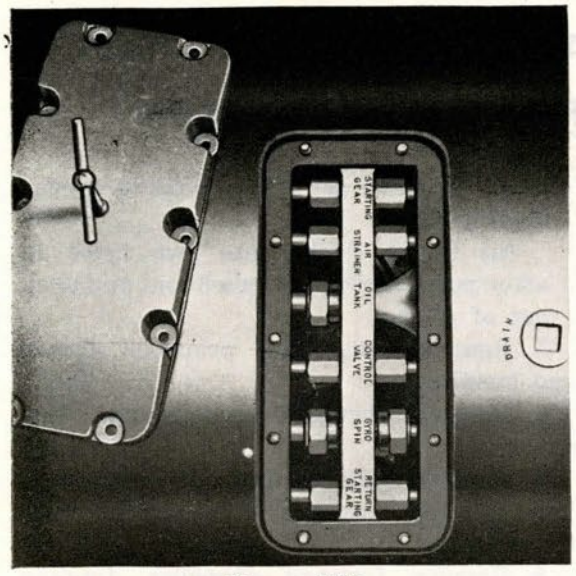

Figure 158

9. Air pipe, starting valve to bulkhead (starting gear). **(141A)**

10. Air pipe, starting valve to bulkhead (gyro spin). **(229)**

11. Air pipe, combustion flask to bulkhead (strainer body). **(141A)**

12. Water pipe, restriction valve to sprays. **(229, 144)**

13. Fuel pipe, restriction valve to spray. **(144)**

14. Air pipe, reducing valve to combustion flask. **(134)**

15. Main air pipe to bulkhead (to preheater). **(134)**

16. Main air pipe, bulkhead to starting valve (preheater). **(134)**

17. Wire, screws, and reducing-valve body assembly. **(72, 13-14, or 386)**

18. Four screws for speed-change operating shaft bracket (not applicable to Mk 23 type). **(40)**

19. Roller pivot screw and roller for valve rack (not applicable to Mk 23 Type). **(41)**

20. Screws for speed-change bracket, and speed-change bracket with parts assembled (not applicable to Mk 23 Type). **(386)**

21. Four holding screws for nozzle-valve bonnet, bonnet with valve, stem and rack and gasket (not applicable to Mk 23 Type). **(459)**

22. Nuts and screw, and nozzle unit with combustion flask assembly. **(227-227A, 435)**

D. Disconnect and Remove Main Engine from Afterbody

1. Remove nuts, manifold cover, and gasket. **(48, 200-441)**

2. Remove pipes connected to forward nipples on manifold (Fig. 158):

(a) Starting gear. **(141A)**
(b) Air strainer. **(141A)**
(c) Oil pump. **(229)**
(d) Control valve. **(141A)**
(e) Gyro spin. **(229)**
(f) Starting-gear return. **(141A)**

3. Remove nuts from turbine bulkhead. **(457)**

4. Remove main engine from afterbody:

(a) Screw guide tool on end of after propeller shaft.

(b) Install lifting handles on preheater pipe nipple and gyro-spin pipe nipple on bulkhead. **(446)**

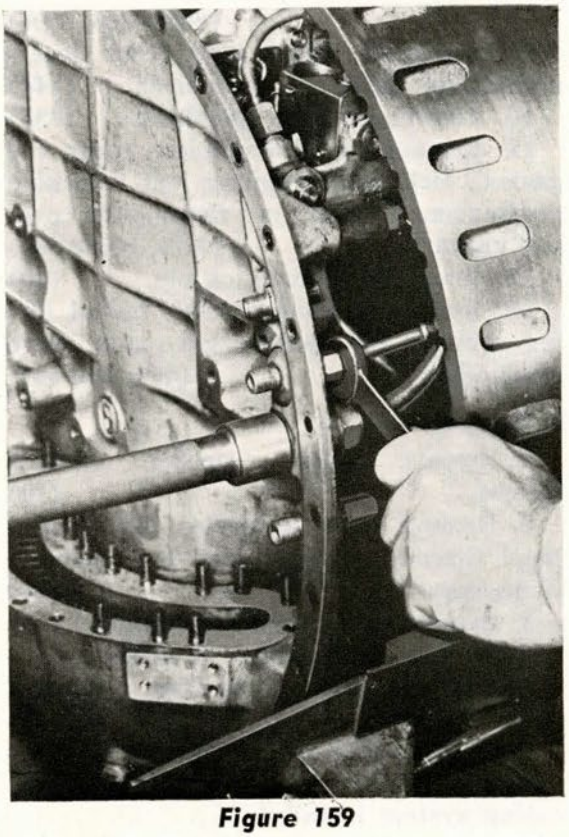

Figure 159

(c) Remove pin and roller from supporting bracket (SG 3174), insert bracket through gyro door, and replace roller and pin under shaft.

(d) Secure guide bracket (SG 2879) to lower forward end of afterbody.

(e) With one man on each lifting handle and one man supporting shafts, pull main engine out of afterbody about four inches.

(f) Disconnect water pipe from nipple on after side of turbine bulkhead (Fig. 159). (141A)

(g) Remove main engine from afterbody and clamp in overhauling stand.

(h) Remove lifting handles, guide tool, supporting bracket, and guide bracket. (446, 447)

E. Remove Control Valve from Afterbody

Note: In order to remove control valve from afterbody when the latter is assembled, it is necessary to remove forward gyro index gear assembly (see steps A-2 and A-3, above).

1. Disconnect air pipe from control valve to air-strainer body. (141A)
2. Disconnect air pipe from manifold to control valve; steady control valve with wrench. (402, 141A)
3. Loosen screw in control valve clamp and remove control valve. (41)

F. Remove Starting Gear

1. Disconnect pipes from starting gear. (141A)
2. Remove holding screws and lift out starting gear and gasket. (41)

Chapter 8—Section 4

AFTERBODY—WITH PARTS ASSEMBLED TO SHELL

A. Remove Gyro Index Setting Device

(See steps A-2 and A-3 of Section 3 for removal of spreaders and forward gyro index gear assemblies.)

1. Remove cotter pins and index-gear struts. (72)
2. Remove nuts from angle-setting sockets. (227-227A, 141A)
3. Remove after gyro index gears from angle-setting sockets. (It may be necessary to pry them off with a screw driver.) (227-227A)
4. Remove spreaders from angle-setting socket bearings.
5. Remove setting sockets, ring seals, and spacers. (227-227A)

B. Remove Rudder Rods and Connections

1. Remove split taper pins securing rudder connection forks to rudder connections passing through packing glands in after bulkhead. Remove forks. (72, 166)
2. Loosen packing-gland nuts and remove rudder rods, pulling rudder connections through packing glands from inside. (229)

C. Remove Exhaust Valves

1. Remove cotter pins and nuts for exhaust-valve bracket. (72, 408)
2. Remove exhaust-valve bracket, springs, and valves.

D. Remove After Bulkhead Bearing

1. Remove screws for after bulkhead bearing. (227-227A)
2. Remove U-seal retainer and U-seal.
3. Remove after bulkhead bearing, using puller (SG 2858) (Fig. 160). (191)
4. Remove washer for bulkhead bearing.

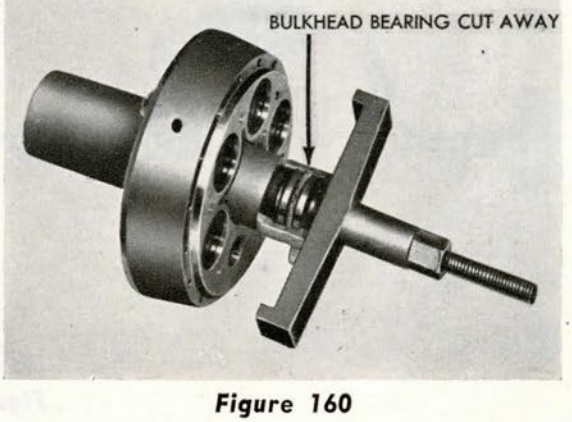

Figure 160

E. Remove Pipes from Afterbody

1. Water pipe, bulkhead to depth mechanism casing (pull pipe aft and slip it through pipe tie).
2. Manifold to air-strainer body. (141A)
3. Air-strainer body to depth engine. (141A)
4. Air-strainer body to steering engine. (141A)
5. Control valve to air-strainer body. (141A)
6. Manifold to starting gear. (141A)
7. Starting gear to manifold. (141A)
8. Manifold to control valve. (141A)
9. Manifold to gyro spin nipple. (229)

***F. Remove Oil Tanks**

1. Drain tanks and remove filling pipes. (13-14, 451)
2. Remove cotter pin, nut, and clamp for vent pipes. (72, 155)
3. Remove vent pipes. (438)
4. Remove oil suction pipe from manifold to oil tanks (both ends). (183, 229)
5. Remove wire and holding screws for oil tanks. (72, 40)
6. Remove oil tanks and spacing washers from afterbody.

***G. Remove Horizontal Bulkheads**

1. Remove wire, screws, and horizontal bulkheads. (72, 41)

***H. Remove Exhaust Tubes**

1. Remove wires through screw heads, and remove screws and thimbles for exhaust tubes. (72, 41)
2. With a screw driver, pry under edges of after end of exhaust tubes, bending tubes in sufficiently to clear rolled projection from grooves in tube holes in afterbody bulkhead.
3. Pull tubes clear of after bulkhead and remove.

I. Remove Depth-Setting Mechanism

1. Remove cotter pin, nut, and washer from depth-index spindle. (72, 155)
2. Remove center gear.
3. Remove side-gear spindle assembly.
4. Loosen packing gland nut and push out index spindle. (18)
5. Remove index dial and pinion.
6. Remove gland nut and packing.

*7. To remove fixed annular gear, apply sufficient heat on lock screw to soften solder. Remove lock screw and pry out fixed annular gear. (41)

Note 1: Fixed annular gear should not be removed unless replacement is required.

Note 2: When removing lock screw, take care to apply only enough heat to soften solder holding set screw. Too much heat may melt solder around depth index casing, causing a leak.

8. Remove pin, socket, and spring from side-gear spindle. (166)

OVERHAUL, ASSEMBLE, AND TEST PARTS ASSEMBLED TO AFTERBODY SHELL

J. Afterbody Shell

1. Clean and inspect afterbody shell for dents, loose rivets, and loose solder around bulkheads, rings, flanges, etc.

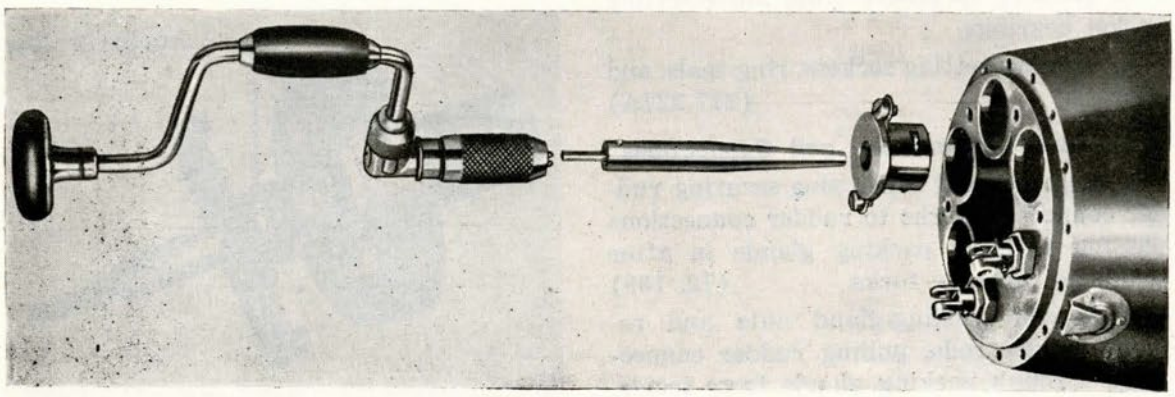

Figure 161

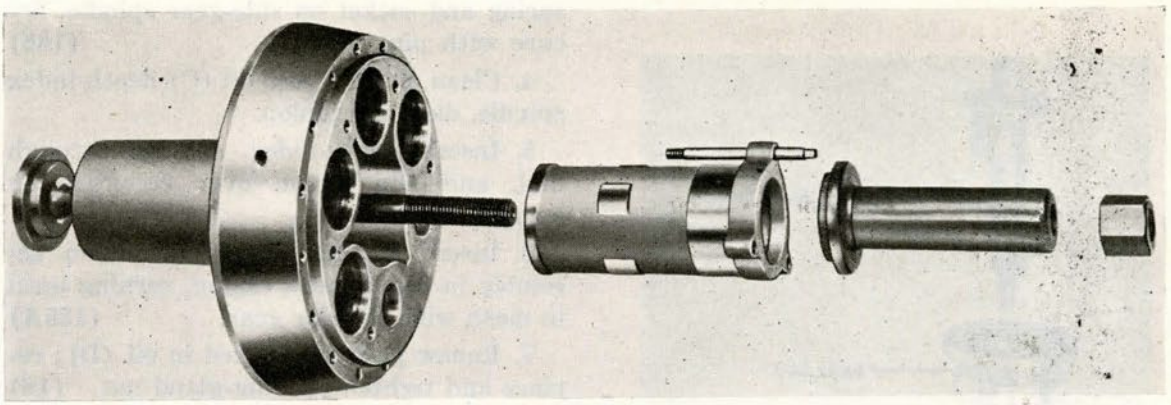

Figure 162

***K. Exhaust Tubes**

1. Reform and insert exhaust tubes through forward end; guide ends into holes in after bulkhead; push into place; and line up forward ends with holes in vertical bulkhead.

2. Insert thimbles for exhaust tubes and secure with screws. Wire screws together. **(41, 72)**

3. Roll exhaust tubes into grooves in after bulkhead (Fig. 161). **(39, WE208)**

L. After-Bulkhead Bearing

1. Clean bearing and inspect bearing surfaces and seats for burrs and scoring.

2. Apply light coat of grease (E) to bearing.

3. Insert washer for bearing in bulkhead.

4. Install bearing in bulkhead, using assembly tool (SG 2849) (Fig. 162). **(191, 227-227A)**

5. Install U-seal and retainer and secure with screws. **(227-227A)**

***M. Horizontal Bulkhead**

1. Clean, inspect, and straighten bulkheads if necessary.

2. Install bulkheads in afterbody and secure with screws. Wire screw heads. **(41, 72)**

N. Nipples in Afterbody

1. Clean, inspect, reseat, and chase threads where necessary. **(WE83, WE85, WE94, WE95)**

O. Afterbody Pipes

1. Make certain that there are no obstructions in pipes.

*2. Anneal pipes.

*3. Reface pipe collars and chase threads in pipe nuts with taps. **(WE84, WE86)**

P. Screws in Flanges

1. Clean and inspect screws in flanges for hand-hole plates, manifold cover, and turbine bulkhead for looseness or defects.

2. Chase threads, resolder, or replace screws where necessary. **(490, WE23)**

***Q. Oil Tanks**

1. Clean and inspect oil tanks.

2. Wash out interior of tanks with grease solvent and blow dry with air. Note that ball check valves are free by shaking tanks.

3. Reseat nipples and chase threads where necessary. **(WE83, WE85, WE94, WE95, WE102)**

4. Reface pipe collars. **(WE84, WE86)**

5. Install oil tanks and spacing washers and secure with screws. Wire screw heads. **(40, 72)**

6. Install and connect oil-tank vent pipes; secure with clamp, nut, and cotter pin. **(438, 155, 72)**

7. Install oil-tank filling pipes and connect to tanks and filling flange. **(451)**

8. Install oil suction pipe; connect to tanks and to manifold. **(229, 183)**

R. Depth-Setting Mechanism (Fig. 163)

*1. If removed, install fixed annular gear with recess in line with lock screw hole.

*2. Tin lock screw, apply heat, and screw in place (see Note 2 under step I-7). **(41)**

3. Clean, inspect, oil (C), and assemble

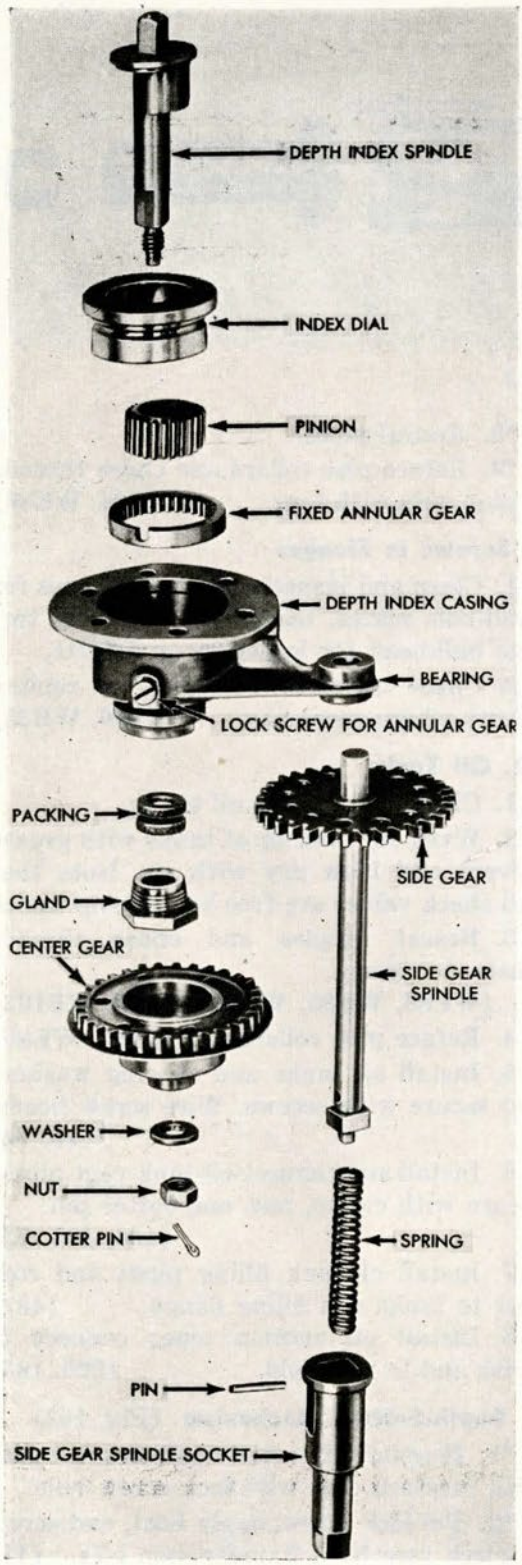

Figure 163

spring and socket on side-gear spindle. Secure with pin. **(166)**

4. Clean, inspect, and oil (C) depth-index spindle, dial, and pinion.

5. Insert depth-index spindle through dial, and slip pinion over eccentric on spindle.

6. Insert spindle, dial, and pinion assembly in depth-index casing, turning until in mesh with annular gear. **(135A)**

7. Renew packing, soaked in oil (D); replace and tighten packing-gland nut. **(18)**

8. Install side-gear spindle assembly in bearing in casing; hold in place and install center gear.

9. Secure center-gear to spindle with washer, nut, and cotter pin. **(155, 72)**

S. Rudder Rods and Connections

1. Clean, inspect, oil (C), and insert rudder rods and connections through packing glands in after bulkhead.

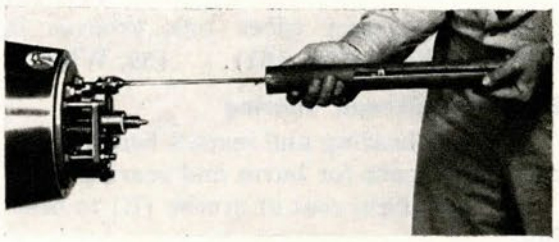

Figure 164

2. Repack packing glands, using approximately nine inches of 3/16-inch-diameter asbestos packing. Set up on gland nuts gradually, while working rudder rods back and forth. Use oil (D) while working in packing. When properly packed, rudder rods should move with a force of nine pounds or less, with the gland nut set up flush (Fig. 164). **(229, 98)**

Note: Gland nuts should come up against glands in order to allow full travel of rudder rods. If gland nuts protrude, it will be necessary to reduce the amount of packing in the gland.

3. Replace rudder connection ends; line up taper pin holes properly; and drive split taper pins into place. Spread ends of pins. **(166, 72)**

T. Exhaust Valves

1. Clean and inspect exhaust valves and their seats on the afterbody bulkhead. Remove ring seals from valves.

2. Apply spotting fluid to valve seats on afterbody bulkhead; insert valves in exhaust holes; and rotate valves back and forth, using screw driver in valve stem slot. Remove valves and note amount of contact between valves and seats, as indicated by the spotting fluid. **(41)**

3. If valve seats on bulkhead are not true, grind valves to seats, using light grinding compound. After grinding, wash off compound from valves and seats. **(41)**

4. After grinding, lap valves to valve seats, using oil (C). After lapping, wipe parts clean. **(41)**

5. Slip new ring seals on valves; insert valves in exhaust holes and assemble springs on valves.

6. Replace valve bracket and secure with holding nuts and cotter pins. **(408, 72)**

U. Gyro Index-Setting Device

1. Clean angle-setting socket bearings, paying particular attention to seats for ring seals and spacers.

2. Clean; inspect threads for burrs; place ring seals and spacers on sockets.

3. Oil (C) sockets and replace in angle-setting socket bearings. **(227-227A)**

4. Clean, inspect for alignment, oil (C), and replace spreaders on angle-setting socket bearings.

5. Clean and inspect after gyro index gears. Place gears on surface plate and check for alignment.

6. Replace gears on index-setting sockets and secure with holding nuts.

(227-227A, 141A)

Note: When securing gears, tighten holding nuts until sockets bind up solidly. Back off nuts just enough to allow sockets to turn with a slight drag. In this position, ring seals are compressed, but there is 0.001 to 0.002 inch clearance between spacers and bearings.

7. Clean, inspect, oil (C), and replace index gear struts. Secure with cotter pins.

(72)

Note: Forward gyro index-gear assemblies should not be installed until after installation of gyro mechanism. See Section 10.

V. Secure Rudder Rods

1. Wire free ends of rudder rods to after gyro index gears (to prevent interference while installing gyro mechanism).

W. Replace Pipes in Afterbody

1. Manifold to air-strainer body. **(141A)**
2. Air-strainer body to depth engine. **(141A)**
3. Air-strainer body to steering engine. **(141A)**
4. Control valve to air-strainer body. **(141A)**
5. Manifold to starting gear. **(141A)**
6. Starting gear to manifold. **(141A)**
7. Manifold to control valve. **(141A)**
8. Manifold to gyro-spin nipple. **(229)**
9. Water pipe, bulkhead to depth-mechanism casing (slip small nut through pipe tie).

Note: Small nut on pipe must be forward.

The above completes the assembly of the afterbody shell prior to installation of major units.

Chapter 8—Section 5

VALVE GROUP AND SUPERHEATER

DISASSEMBLY

A. Disassemble Valve-Group Body Assembly

1. Reducing valve:

(a) Secure valve-group body assembly to swivel stand. (386)

(b) Remove follower nut and reducing valve nipple connection. (377)

(c) Remove lock screw and washer for packing gland. (389)

(d) Remove packing gland and packing for reducing valve stem. (422, 482)

(e) Remove reducing-valve stop plug and washer. (13-14)

(f) Remove cotter pin and lock nut for reducing valve. (421, 227-227A, 72)

(g) Remove reducing valve. (421, 227-227A)

(h) Push out reducing-valve stem.

(i) Remove control pipe from body. (141A)

2. Starting valve:

(a) Remove follower and starting-valve nipple connection. (420, 377)

(b) Remove spring and push out starting valve. (74)

3. Restriction valve (not applicable to Mk 23 Type):

(a) Loosen gland and unscrew restriction-valve stuffing box. (434, 377)

(b) Remove plug and washer for restriction-valve body. (427)

(c) Place pin wrench on pinion and pull restriction valve out of body, turning the valve when pulling out of body. (439)

(d) Remove taper pin and pinion. (166, 467)

(e) Remove stuffing box and gland.

(f) Remove gland and packing from stuffing box. (434, 377, 482)

B. Disassemble Control Valve

1. Remove cap and washer for control-valve-body. (402)

2. Remove strainer.

3. Clamp spring case in vise (being careful not to distort it) and unscrew control-valve body with valve. (402)

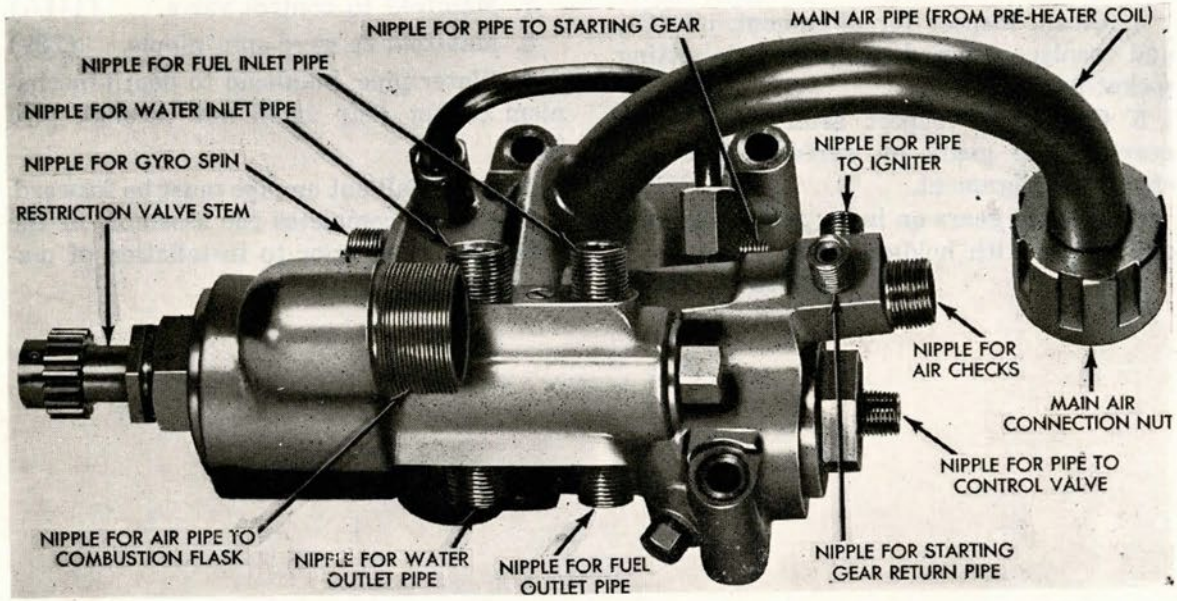

Figure 165

4. Remove control valve.

5. Remove blank nut and washer for test nipple. (18)

6. Remove large spring button, spring, and small spring button.

7. Loosen clamp screws and remove control-valve adjusting screw. (40)

C. Disassemble Combustion Flask and Nozzle Unit

1. Remove fuel spray and washer. (51A, 406)

2. Remove water sprays and washers. (51A, 406)

3. Remove dummy igniter and washer. (391A)

4. Disassemble sprays:

(a) Remove spray body and washer from spray holder. (12)

(b) Remove plug and whirl from spray body. (41)

*5. Remove plugs and washers from nozzle holes. (466)

*6. Remove test plug and washer from nozzle hole. (183)

*7. Disassemble nozzle valve and bonnet assembly (not applicable to Mk 23 Type):

Note: For removal of this assembly from nozzle unit, see Section 3.

(a) Unscrew operating rack, with adjusting nut, from valve stem.

(b) Loosen packing gland and remove nozzle valve from bonnet. (440)

(c) Remove packing gland and packing from bonnet. (440, 482)

(d) Remove cotter pin and unscrew adjusting nut from operating rack. (72, 18)

The above completes the disassembly of the valve group and superheater.

OVERHAUL, ASSEMBLY, AND TEST

*D. Nipples and Pipe Collars for Reducing-Valve Body (Fig. 165)

1. Secure reducing-valve body to swivel stand. (386)

2. Chase threads on main air-connection nut, and replace collar on pipe (Fig. 166). (WE97, WE81)

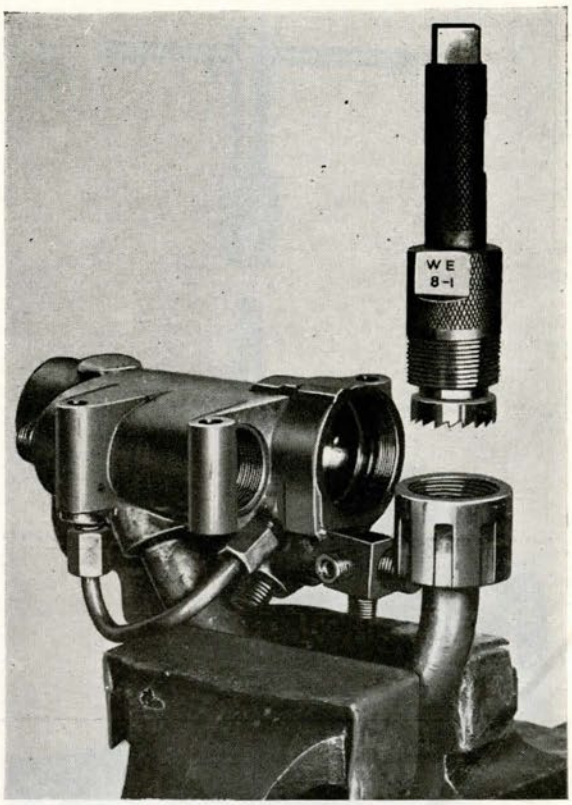

Figure 166

3. Chase threads and reseat seat on nipple for pipe to combustion flask. (WE92, WE80, WE80A)

4. Chase threads and reseat seats on nipples for gyro spin, air checks, and water inlet and outlet pipes (Fig. 167). (WE83, 443, WE94)

5. Chase threads and reseat seats on nipples for fuel inlet and outlet pipes (Fig. 168). (WE87, WE94A)

6. Chase threads and reseat seats on nipples for starting gear, starting-gear return, igniter, and control-chamber pipes. (WE85, WE95)

E. Assemble Valve-Group Body Assembly (Fig. 169)

1. Thoroughly clean and inspect all parts. Remove burrs where found.

2. Starting valve:

*(a) Reseat starting valve seat in body (Fig. 170). (WE50, 443)

*(b) Remove piston rings from valve.

*(c) Lap valve to seat (Fig. 171). (WE54)

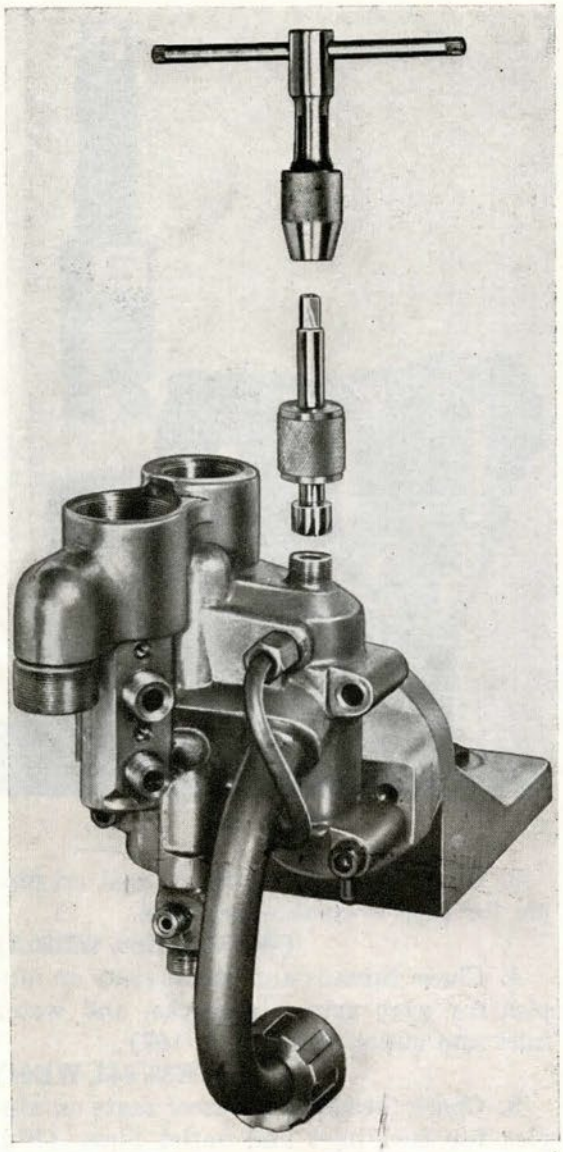

Figure 167

*(d) Lap hole for valve (Fig. 171A). **(WE53)**

*(e) Fit new piston rings:

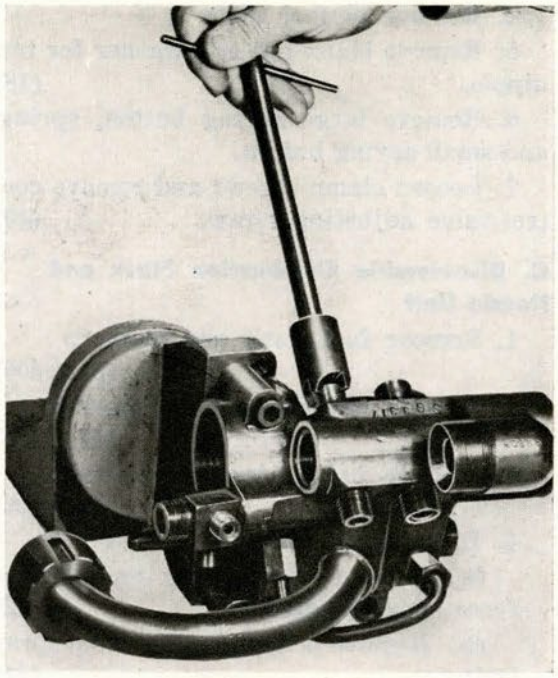

Figure 168

(1) Adjust male lap, WE53, to fit valve hole snugly. **(WE53, 37)**

(2) Measure diameter of WE53 after adjusting to fit hole. **(WE6, WE53)**

(3) Adjust WE53 so that it is 0.005-inch larger in diameter than the valve hole. **(WE6, WE53, 37)**

(4) Insert WE53 into female lap, WE52, and adjust female lap, WE52, to fit WE53 snugly. **(WE53, WE52, 41)**

(5) Select new rings and see that they are free from burrs. If possible, select rings that will fit WE52 without dressing down the butt ends. **(WE52)**

Note: If necessary to remove metal on butt ends to fit rings into lap,

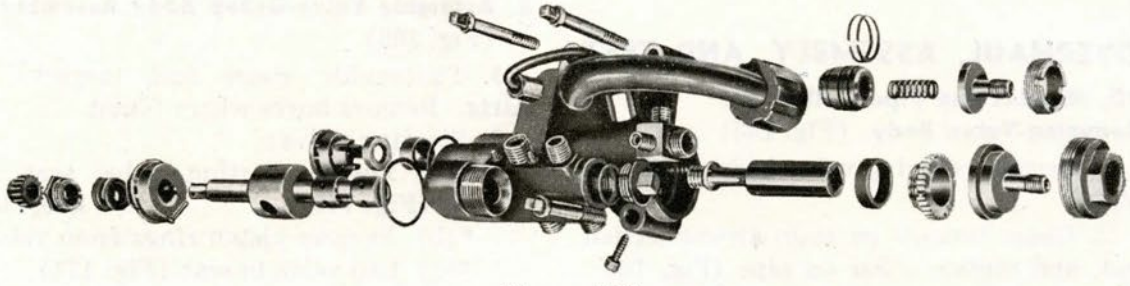

Figure 169

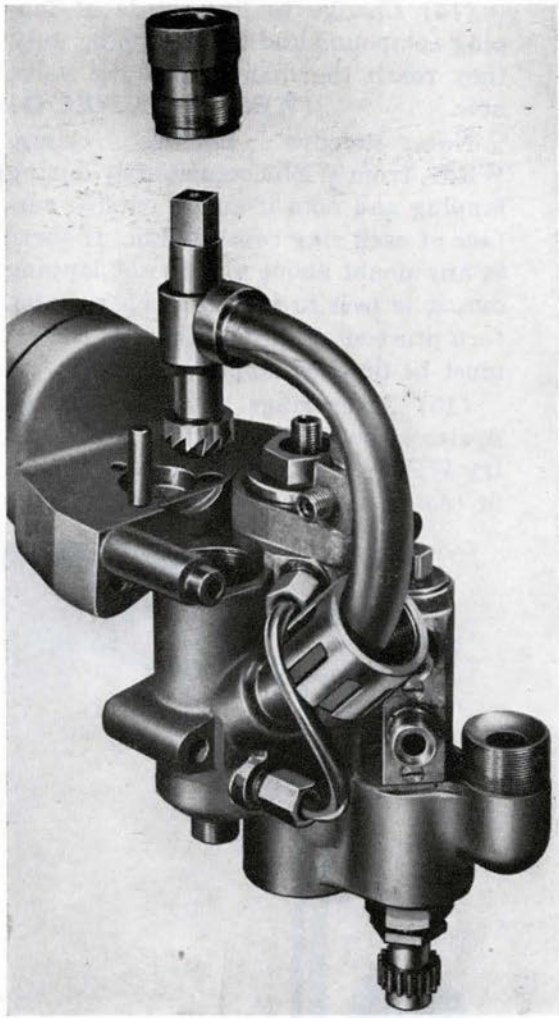

Figure 170

WE52, use a small flat file, and finish by stoning.

(6) Measure width of rings. (WE5)

Note: The average ring before fitting will measure about 0.100-inch.

(7) Rub rings down to a width of 0.096-inch against a piece of No. 0 emery cloth laid on a smooth and level surface. (WE5)

(8) Finish lapping rings against smooth side of combination oil stone, trying rings in grooves on piston until a snug fit without binding is obtained.

(9) After lapping, wash valve and rings thoroughly with a suitable grease solvent and blow dry with air.

(10) Place all rings in female lap. (WE52)

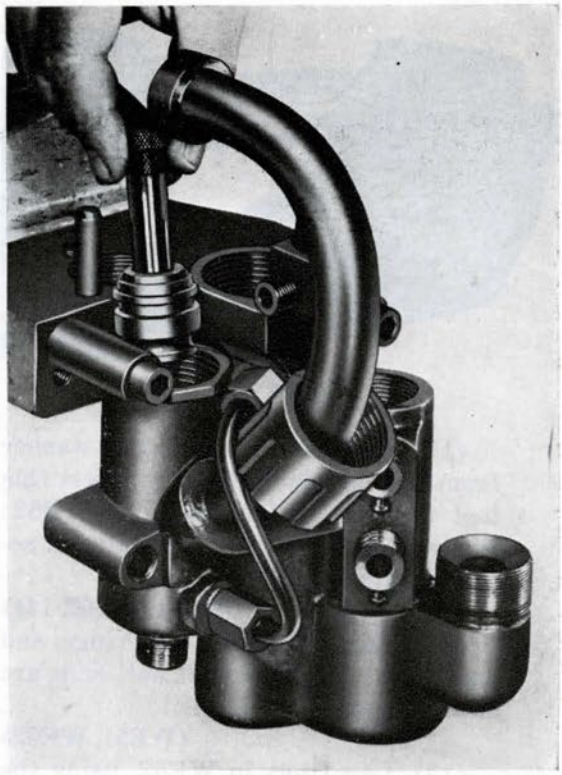

Figure 171

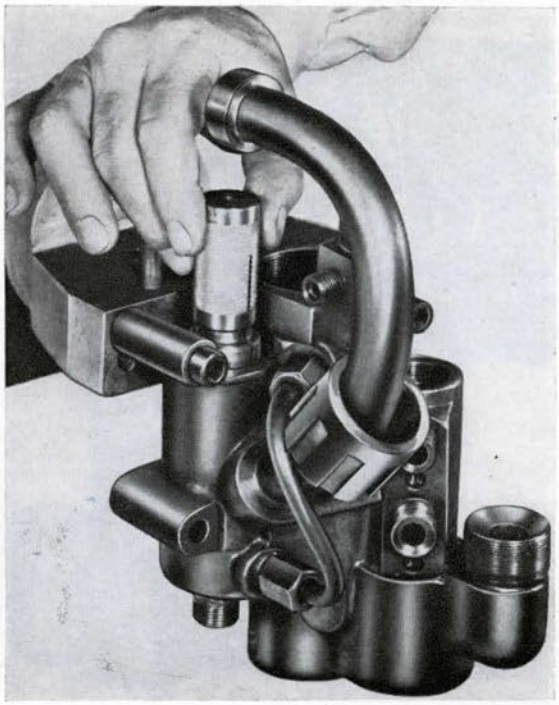

Figure 171A

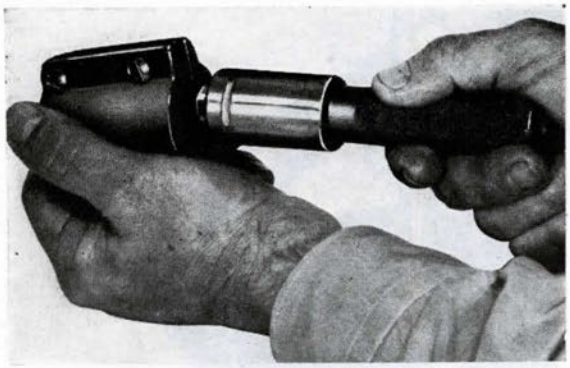

Figure 172

(11) Remove clamp bolt and washer from holding clamp, WE51; insert this tool through piston rings in WE52; slip washer over end of WE51 and secure tightly with clamp bolt.
(WE51, WE52, 144)

(12) Remove WE51, with rings, and examine rings to see that butt ends are closed together (Fig. 172).
(WE51, WE52)

(13) Lap rings in WE52, using the medium-fine grade of compound. Gradually tighten up on lap until rings are 0.0005-inch larger in diameter than valve hole. **(WE51, WE52, WE6, 41)**

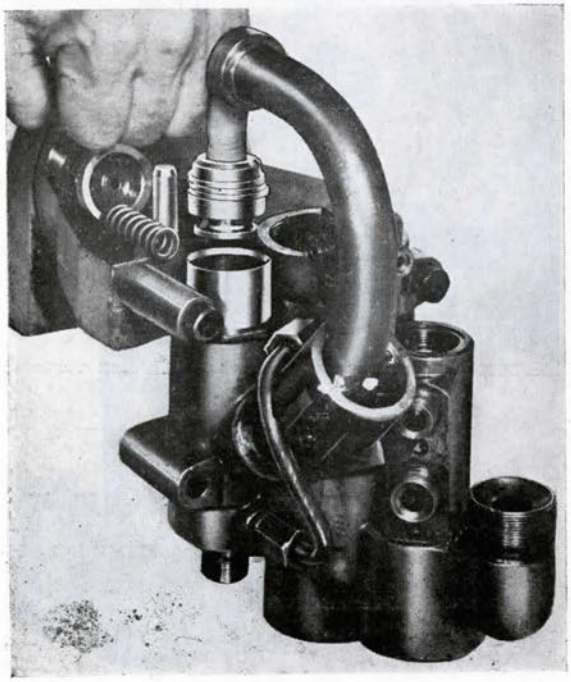

Figure 173

(14) Change to fine grade of lapping compound and finish lapping until they reach the diameter of the valve hole. **(WE51, WE52, WE6, 41)**

Note: Remove holding clamp, WE51, from WE52 occasionally during lapping and note if entire outside surface of each ring contacts lap. If there is any doubt about a ring not lapping out, it is best to replace such ring before proceeding any further, as the set must be finished lapped together.

(15) After rings have been lapped to size of hole, wash clean, oil (C), and try WE51, with rings in hole. If rings fit too snugly, do not attempt to force

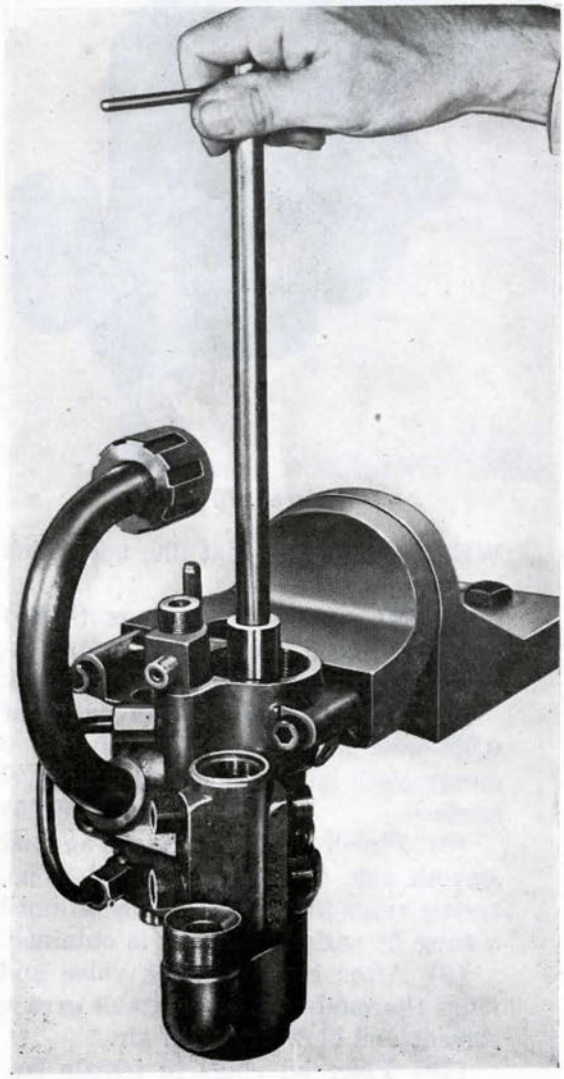

Figure 174

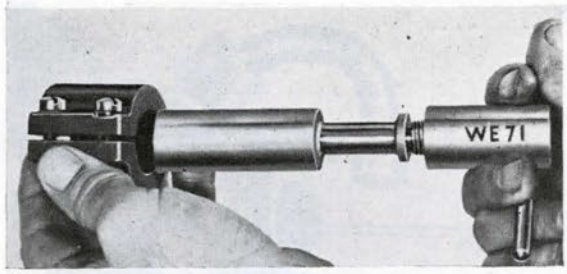

Figure 175

them into cylinder, but replace in WE52 and continue to lap and try again until fit is obtained.

(WE51, WE52, 212)

(16) Remove rings from WE51; wash thoroughly with grease solvent and assemble them on valve.

(WE51, 144)

Note: Steps (b) through (e), above, do not apply if a new starting valve (with nylon seat and ring seal) is used.

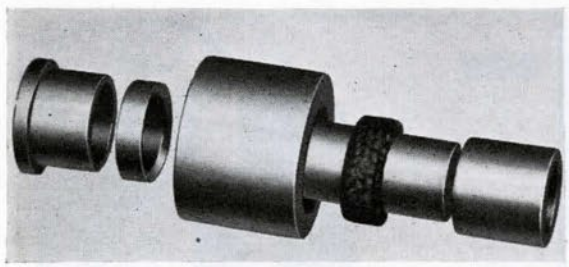

Figure 176

*(f) Lap starting valve to nipple connection (cap), using a piece of stock having a ½-inch-20 tapped hole in one end.

*(g) Chase threads and reseat seat on connection nipple. **(WE95, WE85)**

(h) Insert assembly bushing into valve hole. **(212)**

(i) Oil (C), lightly, and push starting valve through bushing down on its seat (Fig 173). **(212)**

(j) Oil (B), lightly, and insert starting-valve spring.

(k) Replace starting-valve nippie connection and secure with follower.

(420, 377)

3. Reducing valve:

*(a) Lap hole for reducing-valve stem in body (Fig. 174). **(WE220)**

*(b) Lap reducing-valve stem:

(1) Adjust male lap, WE220, to fit valve stem hole snugly. **(WE220, 37)**

(2) Measure diameter of male lap WE220. **(WE220, WE6)**

3. Select a spare valve stem which is slightly larger than diameter measured in step (2), above. **(WE6)**

4. Lap spare valve stem to size (Fig. 175). **(WE71, WE72, WE6)**

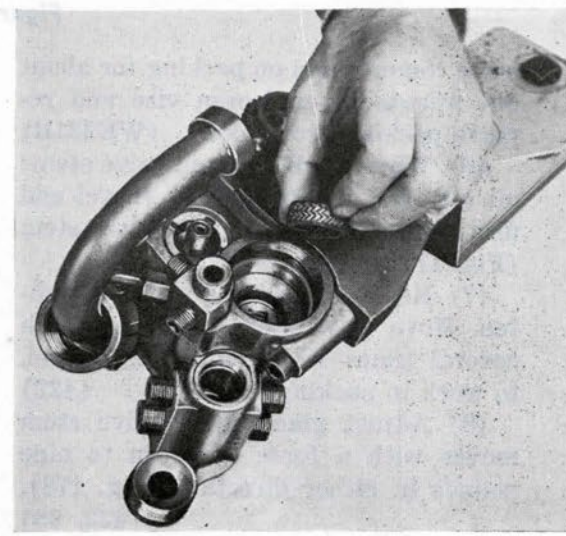

Figure 177

5. Wash valve stem after lapping, and blow dry.

*(c) Lap reducing-valve nipple connection to seat in body, using a piece of stock having a ½-inch-20 tapped hole in one end.

(d) Oil (B), lightly; replace valve stem, valve, lock nut, and cotter pin.

(227-227A) (421, 72)

(e) Renew packing around reducing valve stem:

(1) Trim butt ends of packing, if necessary, to obtain a flush joint.

(2) Slip packing on arbor of packing preforming tool. **(WE234B)**

(3) Slip long and short sleeves on arbor and insert arbor assembly into tool body.

(4) Place bushing against either sleeve and clamp entire assembly between vise jaws (Fig. 176).

(5) Tighten vise to form packing;

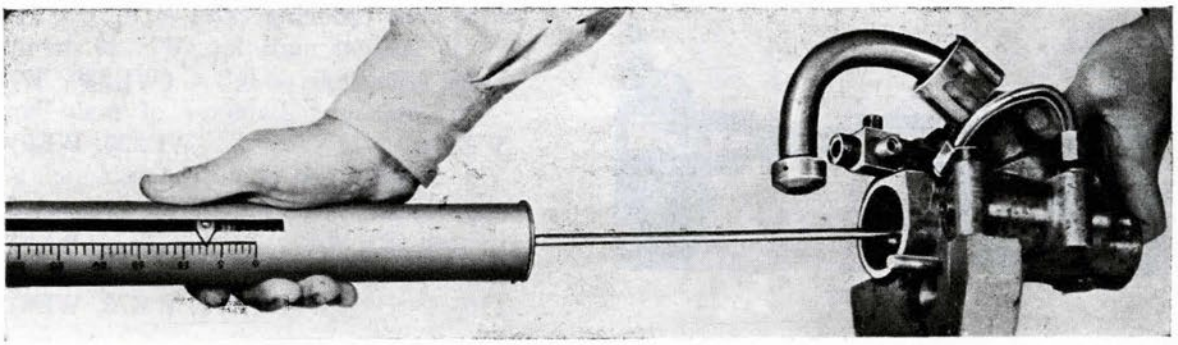

Figure 178

leave compression on packing for about one minute; then loosen vise and remove packing from tool. **(WE234B)**

(6) Wipe oil (B) around valve stem; oil (D) and insert packing (bevel end first) into body around valve stem (Fig. 177).

(7) Replace packing gland and tighten. Move valve stem back and forth several times while tightening gland, to work in packing. **(422)**

(8) Adjust gland until valve stem moves with a force of seven to nine pounds in either direction (Fig. 178). **(422, 98)**

(f) Replace washer and lock screw for packing gland. **(389)**

(g) Clean out 0.020-inch restriction in control chamber.

(h) Replace reducing-valve nipple connection and follower nut. **(377)**

(i) Blow out control pipe and replace on body. **(141A)**

(j) Replace reducing valve stop plug and washer. **(13-14)**

4. Restriction valve (not applicable to Mk 23 Type):

(a) Test restriction valve (Fig. 179):

Note: The restriction valve is calibrated for low-speed restriction only; the sprays act as metering devices in high speed. The restriction valve is calibrated in the same manner as are the sprays; that is, finding the time required to force six pints of water through the low-speed restrictions with a pressure of 35 p.s.i.

Proceed as follows:

(1) Place restriction valve in special holding fixture, with the hole in the nipple on the fixture in proper alignment with the hole in the restriction valve. Clamp restriction valve in fixture. **(49)**

(2) Connect one nipple of holding fixture to the test lead of a correctly calibrated Spray, Check Valve, and Fuel Flask Testing Outfit. **(144)**

(3) Close outlet-valve cock.

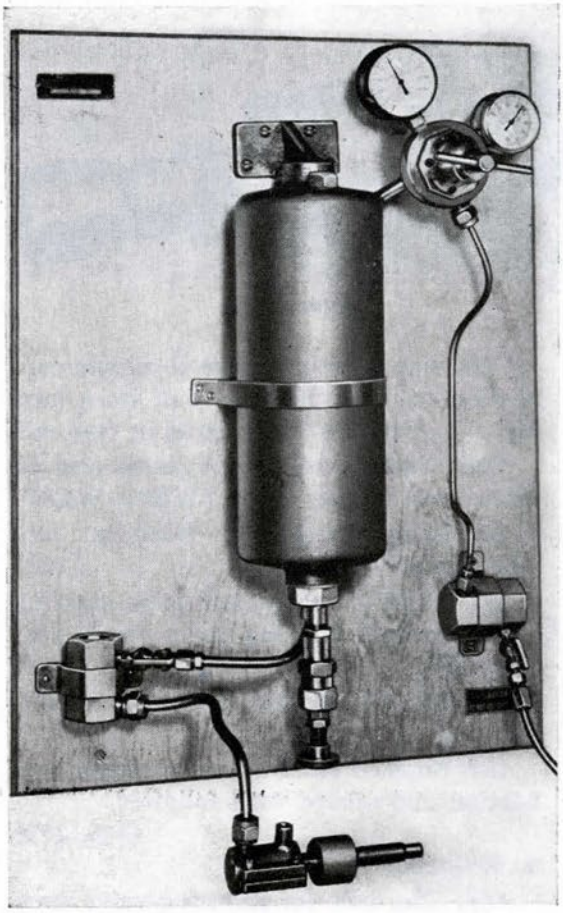

Figure 179

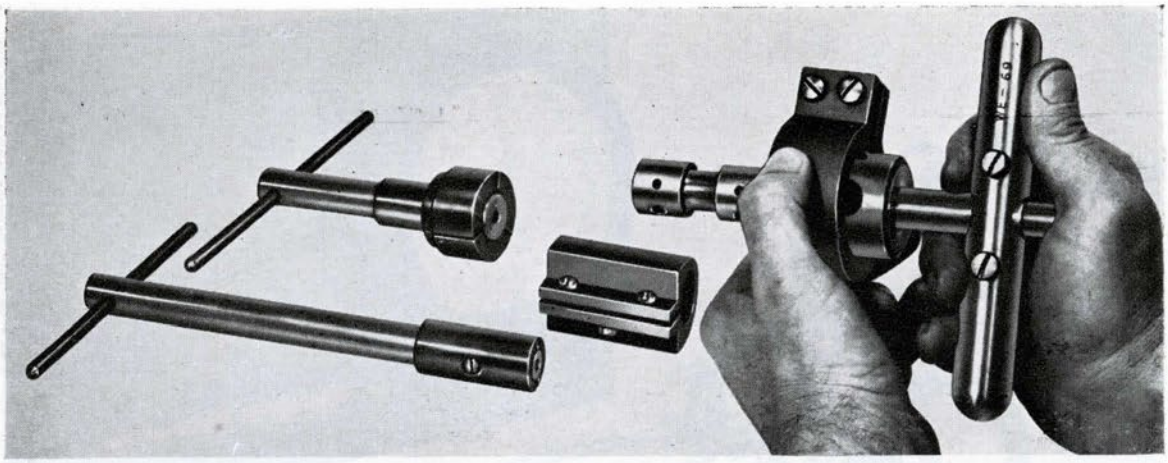

Figure 180

(4) Remove water filling plug and fill bottle with water. (Do not replace plug.) (402)

(5) Remove drain cap from bottom of stand pipe and drain excess water out of bottle until no more will come out. (161, 18)

(6) Replace drain cap over end of stand pipe and replace water filling plug. (161, 18, 402)

(7) Turn on low-pressure-air inlet-valve cock and adjust reducing-valve delivery pressure to exactly 35 p.s.i.

(8) Open outlet-valve cock and make trial run to ascertain that the reduced pressure is correct and that set is in working order. Close inlet-valve cock.

(9) With trial run satisfactorily completed, repeat steps (3) through (6), inclusive.

(10) Turn on the air inlet-valve cock.

(11) Simultaneously start stop watch and open water outlet-valve cock.

(12) Snap stop watch at the moment restriction valve blows air, indicating that water is exhausted. The time found is the restriction valve time for the particular restriction under test. The time for the fuel restriction (low power) should be 144 seconds. The time for the water restriction (low power) should be 67 seconds.

(13) After restriction valve has passed test satisfactorily, close air inlet- and water outlet-valve cocks, disconnect special holding fixture and remove restriction valve from fixture. Wipe off valve. (144, 49)

*(b) Lap restriction valve holes in body (two diameters). (WE221, WE222, 37)

*(c) Lap restriction valve (two diameters) (Fig. 180). (WE68, WE69, WE70, 41)

(d) Place pinion on valve stem temporarily and replace valve in body coated with oil (D), turning valve with tool on pinion until seated. Remove pinion. (439)

(e) Remove oil plugs, fill oil holes with oil (B), and replace oil plugs. (41)

(f) Replace restriction-valve stuffing box and washer. (377)

(g) Pack stuffing box with five pieces of 1/8-inch-diameter by 2 3/8-inch-long asbestos packing which have been soaked in oil (D) at least 12 hours, pushing each piece into place. (482)

(h) Replace and tighten gland. (434)

(i) Replace pinion on end of restriction-valve stem; secure with taper pin and rivet end of pin. (166)

(j) Replace plug and washer for restriction-valve body. (427)

(k) With tool No. 439 installed over end of pinion, place push balance on end of tool at right angles and measure force to turn valve. The force required to turn

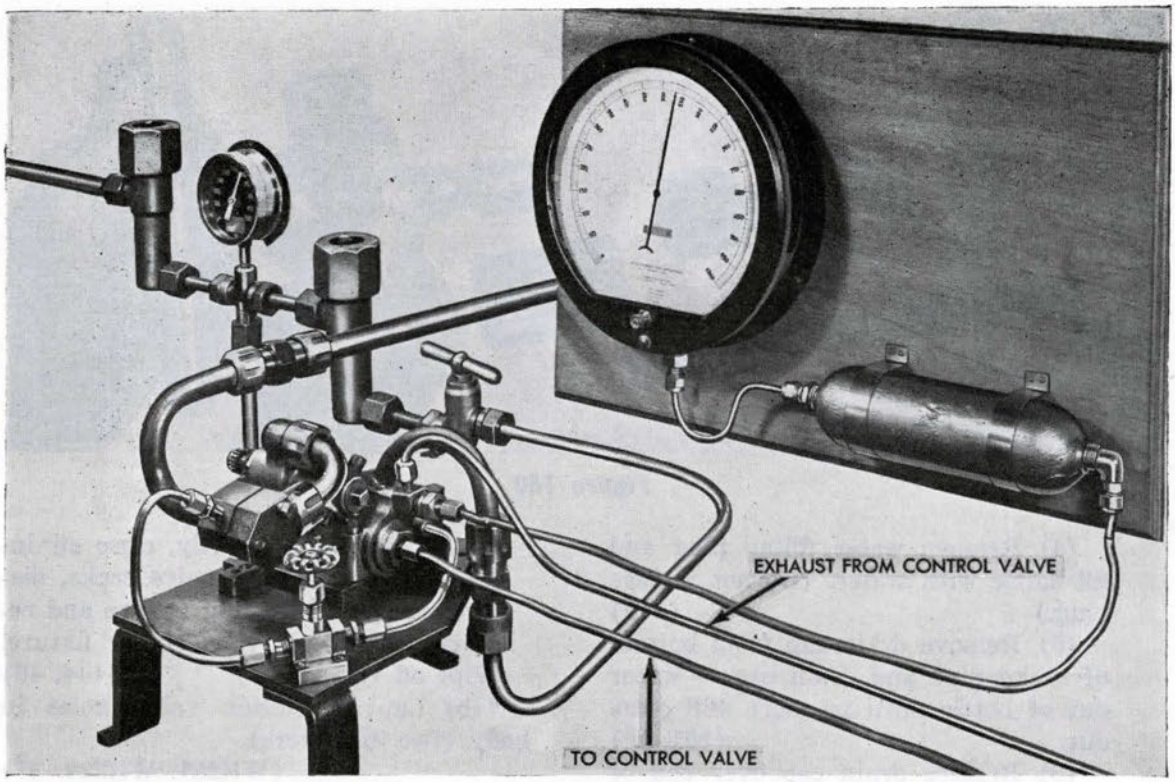

Figure 181

valve should be three to five pounds on a properly packed valve. (439, 98)

F. Test Assembled Reducing Valve
(Fig. 181)

Note: Reducing valves for Torpedoes Mk 14 Type should always be tested with the restriction valve set for "low power". Reducing valves for Torpedoes Mk 23 Type are permanently set for "high power".

1. Test tightness of packing around valve stem:

Note: If tightness was checked in step E-3, (e), (8), above, this step will not be necessary.

(a) Remove stop plug from reducing valve body. (13-14)

(b) Insert a screw rod through the nipple connection over reducing-valve stem and push valve stem. (74)

(c) Insert a push balance through stop-plug hole until it touches reducing-valve head, and note force required to move valve. The force should be between seven and nine pounds. (98)

Note: Uniform reducing-valve action depends upon correct installation and tightness of the packing around the reducing-valve stem. It is, therefore, essential that the reducing valve be properly packed and that the packing be adjusted to impose a friction of seven to nine pounds upon the reducing-valve stem movement. The reducing-valve packing (SP 10727) currently furnished in accordance with specifications (OS 867 "Type F") is the only packing authorized, and no substitute should be installed.

(d) Replace stop plug and remove screw rod. (13-14, 74)

2. Ascertain that there is a 0.212-inch restriction in the restriction block.

3. Turn on heater and bring water to a temperature of about 200 degrees Fahrenheit.

4. Adjust precision-gage pointer to read zero.

5. Mount reducing valve on test block. (386)

6. Make the following connections:

(a) Air from banks to starting valve. (134, 218)

(b) Reduced air from reducing valve to restriction block. (134)

(c) Restriction block to atmosphere. (134)

(d) Starting valve to firing valve. (141A)

(e) Firing valve to restriction block. (141A)

(f) Reducing valve (reduced pressure) to gage. Make connection to nipple which supplies air to air check valves. (229)

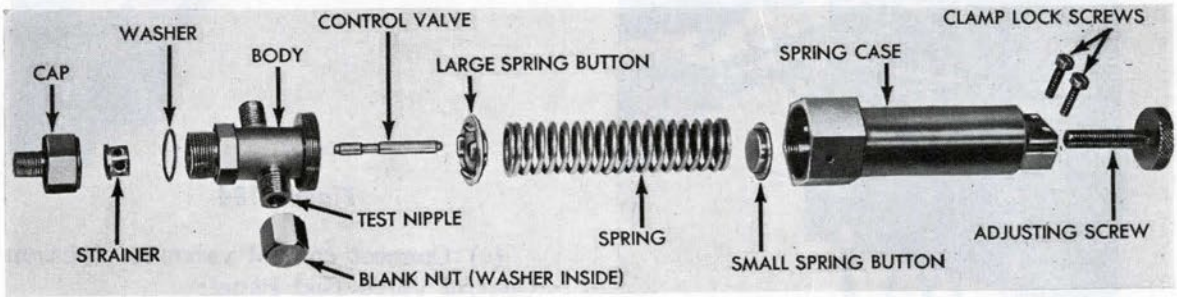

Figure 182

(g) Control chamber on reducing valve to inlet nipple on control valve. (141A)

Note: The control valve should have been previously set on the Control Valve Test Panel to deliver the proper control-valve pressure listed in the torpedo's record book. Step G. below.

(h) Exhaust nipple on control valve to nipple on reducing valve (starting-gear return nipple). (141A)

7. Blank off remaining outlets on reducing valve. (229, 141A)

8. Perform test as follows:

(a) Charge banks to full pressure (2800 p.s.i.).

(b) Open valve from banks, permitting air to bank up to the starting valve, and stand by firing valve.

(c) Open firing valve, and note the reduced pressure obtained. Observe closely the fluctuations and variations of pressure.

Note: Immediately upon firing, the reducing-valve pressure will rise above set pressure, and then drop back to normal. If too much oil is used during the assembly of the reducing valve, the initial pressure "jump" will increase. At the end of the run, when the air-bottle pressure drops below 1000 p.s.i., the reduced pressure will build up 10 to 15 p.s.i. above the set pressure.

(d) Continue test until pressure in air banks drops to 1000 p.s.i. Close firing valve. The test-block pressure found must be the same as that recorded in the torpedo's record book.

Note: The test-block pressure is the average reduced pressure found during the run, excluding the initial jump and the "tail off".

(e) If the correct test-block pressure is not obtained, the control valve setting must be changed to give the correct test-block pressure.

Note: If the control-valve setting is changed, the control valve must be placed in the Control Valve Test Panel and the new control-valve pressure observed. The new control-valve pressure must then be entered in the torpedo's record book. (The official control-valve pressure should always be taken from the Control Valve Test Panel; it should never be taken from a gage connected to the control-valve test nipple during the reducing-valve block test.)

(f) After a satisfactory test has been made, remove blanks and pipe connections, remove control valve, and remove reducing valve from test block. (229, 141A, 134, 218, 386)

9. Test tightness of packing around valve stem (step 1, above, for procedure). The

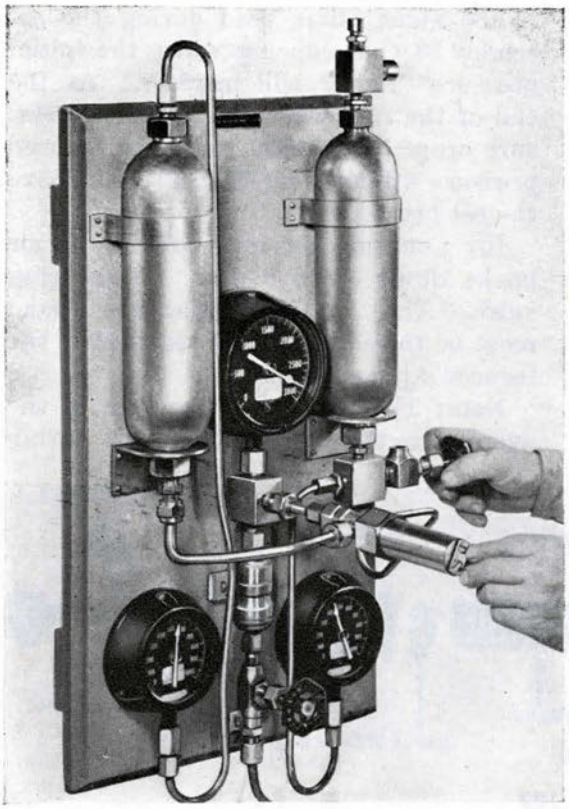

Figure 183

force required to move valve should still be seven to nine pounds.

G. Control Valve (Fig. 182)

*1. Lap valve hole in control-valve body. **(WE147)**

*2. Lap control-valve. **(WE148)**

*3. Chase threads and reseat seats on nipples. **(WE94A, WE95, WE85, WE87)**

4. Oil (C) and replace control-valve in body.

5. Clean and inspect strainer. Replace strainer, washer, and cap. **(402)**

6. Oil (D) and replace small spring button, spring, and large spring button in spring case.

7. With spring case in vise, (set up tight enough to hold without distorting), screw control-valve body into spring case. **(402)**

8. Replace blank nut with washer on test nipple. **(18)**

9. Replace adjusting screw and secure with clamp screws. **(40)**

10. Test control valve (Fig. 183):

(a) Remove blank nut with washer from test nipple on control valve (Fig. 183). **(18)**

(b) Loosen clamp screws for adjusting screw. **(40)**

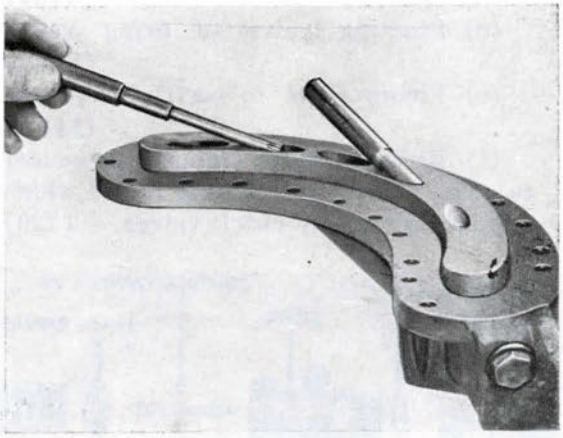

Figure 184

(c) Connect control valve to pipes on Control Valve Test Panel:

(1) High-pressure line to cap on control valve. **(229, 18)**

(2) Control valve to bleeder valve. **(141A)**

(3) Control valve test nipple to gage. **(229)**

(d) Open valve in high-pressure line, first making sure that bleeder valve is open.

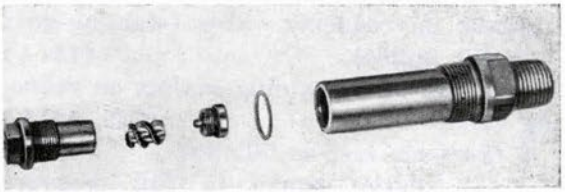

Figure 185

(e) By means of adjusting screw, set control valve to pressure given in torpedo record book, keeping exhaust pressure constant at 450 p.s.i., while making the adjustment.

(f) Vary the exhaust pressure over a range of approximately 100 p.s.i. by opening and closing bleeder valve. The control-valve pressure should remain constant.

(g) Turn off valve in high-pressure line.

(h) Tighten clamp screws for adjusting screw. **(40)**

(i) Open valve in high-pressure line and repeat test to make certain that adjustment was not disturbed when clamp

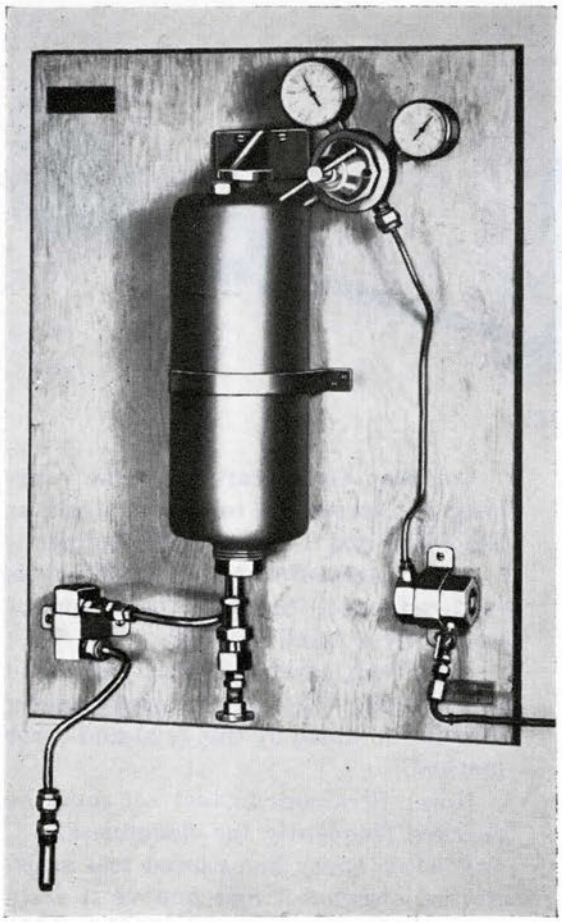

Figure 186

screws for adjusting screw were tightened.

(j) Remove control valve from panel and replace blank nut with washer on control-valve test nipple. **(229, 18, 141A)**

H. Combustion Flask and Nozzle Unit

*1. Chase threads and reseat air connection nipple on combustion flask. **(WE92, WE89)**

*2. Chase threads in hole for igniter; use one-inch-20 NS-3 tap.

*3. Chase threads in holes for sprays; use ¾-inch-20 NS-3 tap.

*4. Chase threads and reseat nipple (pipe to air-strainer body). **(WE95, WE85)**

*5. Run nozzle clearance tools through nozzles (Fig. 184). **(WE37C, WE37D)**

6. Inspect and clean interior of combustion flask.

7. Assemble sprays (Fig. 185):

(a) Clean and inspect hole in spray body.

(b) Clean, inspect whirl, and replace in body. **(41)**

(c) Clean, inspect plug, and replace in body. **(41)**

(d) Clean and inspect spray holder.

(e) Replace spray body and washer in holder. **(12)**

8. Test sprays as follows (Fig. 186):

(a) Connect spray to be tested to outlet pipe of a correctly calibrated Spray, Check Valve, and Fuel Flask Testing Outfit. **(141A, 144)**

(b) Remove plug and fill bottle with water. (Do not replace plug) **(402)**

(c) Remove drain cap in bottom of standpipe and drain excess water out of bottle until no more will come out. **(161, 18)**

(d) Replace drain cap over end of standpipe and replace water filling plug. **(161, 18, 402)**

(e) Make certain that outlet valve cock is closed.

(f) Turn on low-pressure-air inlet valve cock and adjust reducing-valve delivery pressure to exactly 35 p.s.i.

(g) Open outlet valve cock and make trial run to ascertain that the reduced pressure is correct and that set is in working order.

(h) With trial run satisfactorily completed, repeat steps (b) to (e) inclusive.

(i) Turn on the air inlet-valve cock.

(j) Simultaneously start stop watch and open water outlet-valve cock.

(k) Observe pressure closely — it should remain constant at 35 p.s.i.

(l) Snap stop watch at the moment spray blows air, indicating that the water is exhausted.

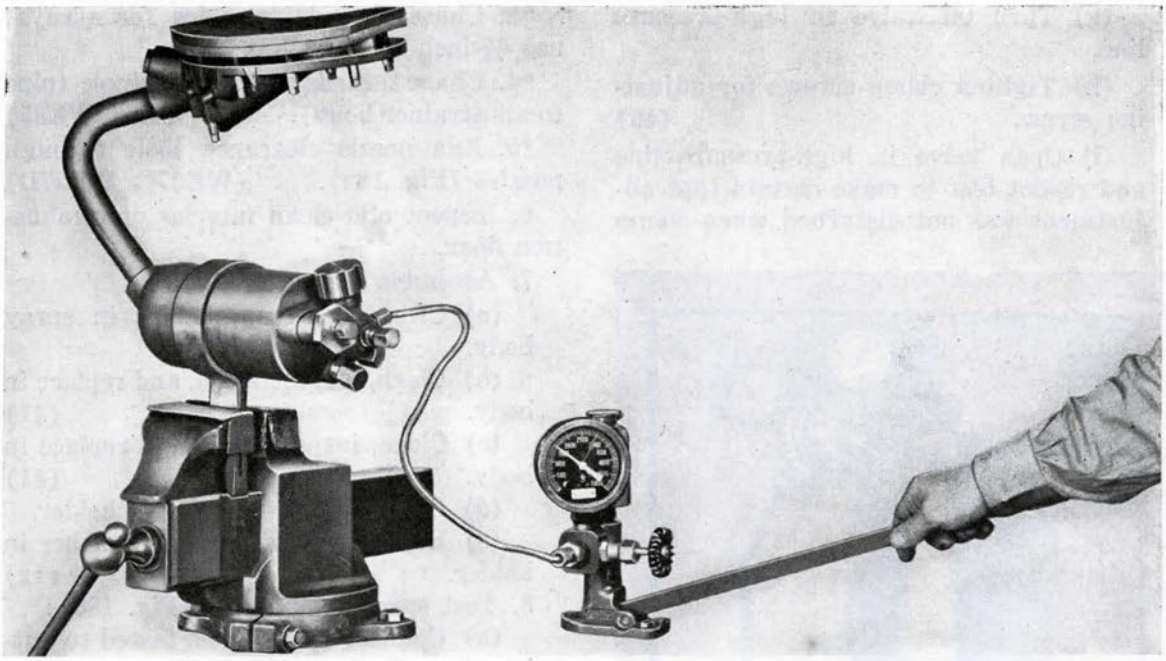

Figure 187

(m) The number of seconds required for six pints of water to pass through the spray is its rating. This rating is stamped on the end of the spray body. Water is used in testing both the fuel and the water sprays.

(n) If necessary to change the sprays to obtain the correct delivery rate, the following is the procedure currently in use at the Naval Torpedo Station, Newport, R. I.:

(1) Remove spray body from spray holder.

(2) Remove plug and whirl from body.

(3) If increased rate of delivery is required, file tip of whirl (bottom thread) slightly.

Caution: Great care must be exercised not to remove too much stock, as the whirl may become unfit for use.

(4) If decreased rate of delivery is required, upset the lip on the bottom of the whirl a small amount.

(5) Clean, assemble spray parts, and repeat test. The correct spray rating must be obtained by this trial-and-error method.

Note: Strainers in test set must be checked frequently for cleanliness.

(o) After spray has passed test satisfactorily, disconnect and remove it from testing outfit. **(141A, 144)**

9. Replace spray holders and washers in combustion flask. **(51A, 406)**

*10. Replace plugs and washers in nozzle holes. (466)

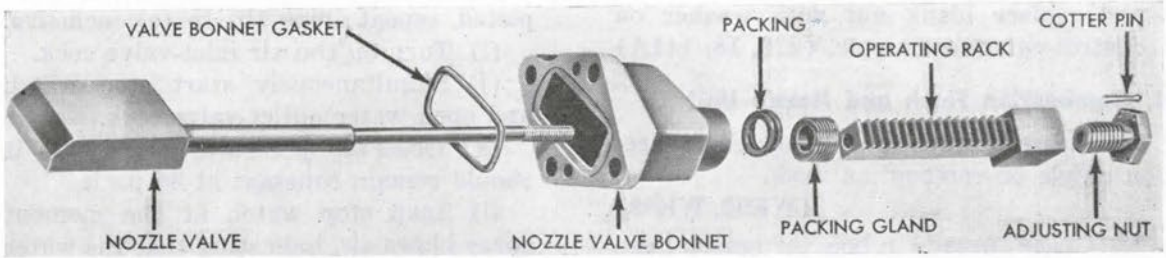

Figure 188

*11. Replace test plug and washer in nozzle hole. (183)

*12. Test combustion flask and nozzle unit for leaks as follows (Fig. 187):

(a) Install gasket and blanking plate over nozzle-valve hole (not applicable to Mk 23 Type). (459)

(b) Install nozzle blanking plate and gasket on nozzle unit. (227-227A)

(c) Mount combustion flask in vise with igniter hole uppermost.

(d) Fill combustion flask with water through igniter hole.

(e) Install dummy igniter. (391A)

(f) Connect lead from hydraulic pump to nipple for pipe to air-strainer body. (141A)

(g) Blank spray holder nipples, dummy igniter nipple, and main air nipple. (144, 141A, 134)

(h) Turn combustion flask in vise, so that test plug in nozzle unit is at its highest point.

(i) Remove test plug and washer from nozzle unit. (183)

(j) Pump until water starts coming out test plug hole in nozzle unit.

(k) Replace test plug and washer in nozzle unit. (183)

(l) Pump until a hydraulic pressure of 1500 p.s.i. is obtained.

(m) Examine combustion flask carefully for leaks.

(n) After satisfactory test has been made, loosen nozzle blanking plate to release pressure. (227-227A)

(o) Remove nozzle blanking plate, valve hole blanking plate, test lead, and blanking nuts and remove combustion flask and nozzle unit from vise. (227-227A, 459, 141A, 144, 134)

*13. Fit new nozzle valve (not applicable to Mk 23 Type):

(a) Clean nozzle-valve bonnet.

(b) Insert new valve in bonnet.

(c) Replace packing gland. (440)

(d) Rub a small amount of grinding compound on face of valve.

(e) Secure bonnet and valve assembly to nozzle unit. (459)

(f) Remove nozzle test plug. (183)

(g) Hold valve against seat with a piece of copper tubing inserted through nozzle test plug hole, and grind valve to seat, moving valve by means of valve stem.

(h) After grinding, remove bonnet and valve from nozzle and examine valve. Ridges should show an even flat seat. (459)

(i) Remove packing gland and valve from bonnet and wash parts thoroughly. (440)

(j) Replace nozzle test plug. (183)

*14. Assemble nozzle valve and bonnet assembly (not applicable to Mk 23 Type) (Fig. 188):

(a) Insert nozzle valve in nozzle-valve bonnet.

(b) Repack stuffing box, using 4½ inches of 3/32-inch-diameter asbestos packing soaked in oil (D). Replace packing gland, moving valve stem through stuffing box while tightening gland. Gland must be flush with, or slightly below, surface of nozzle valve bonnet when fully tightened. (440)

(c) Screw adjusting nut into operating rack by hand and secure with cotter pin. (72)

(d) Screw operating rack, with adjusting nut, on valve stem.

Note: For assembly and adjustment of nozzle valve and bonnet unit on turbine bulkhead, see Section 10.

Chapter 8—Section 6

MAIN ENGINE

DISASSEMBLY

With main engine clamped in overhauling stand, proceed as follows:

A. Disconnect Pipes

1. Air pipe, bulkhead to manifold (gyro spin). (229)

2. Air pipe, manifold to governor bracket (return from starting gear). (141A)

3. Air pipe, governor bracket to turbine bulkhead (return from starting gear). (141A)

Note: Disconnect this pipe at turbine bulkhead.

4. Air pipe, bulkhead to manifold (to air strainer body). (141A)

5. Air pipe, bulkhead to manifold (to control valve). (141A)

6. Air pipe, bulkhead to manifold (to starting gear). (141A)

B. Remove Preheater Pipe

1. Remove wire and two screws from bracket for preheater pipe. (72, 49, 64)

2. Remove preheater pipe, with bracket, from turbine bulkhead. (134)

C. Remove Turbine Bulkhead

1. Remove cotter pins and nuts from "A" frame studs on bulkhead. (72, 356)

2. Remove turbine bulkhead.

Note: It may be necessary to tap off with a soft lead hammer.

D. Remove Oil Pump

1. Remove oil pipe from oil pump to manifold (suction). (229)

2. Remove oil pipe from oil pump to spindle casing. (141A)

3. Disconnect short pipe (oil connection to crosshead) at pump; push nut clear of nipple and disconnect oil connection elbow from lower oil connection to crosshead. (141A, 144)

4. Remove cotter pins and nuts from studs for oil pump. (72, 407)

5. Remove oil pump from "A" frame.

E. Remove Governor Body Assembly and Bracket

1. Remove air pipe, governor bracket to turbine bulkhead. (141A)

2. Remove wire, holding screws, and journal caps. (72, 41)

3. Remove governor body assembly.

4. Remove wire, holding screws, and bracket. (72, 49)

5. Remove spring button and spring from lower "A" frame.

F. Disassemble Gear Train

1. Remove top bearing and top bearing holder:

(a) Remove wire, and loosen two lock screws for top bearing cover. (72, 41)

(b) Remove top bearing cover. (13-14)

(c) Remove cotter pin, clamping screw, and clamp for top bearing. (49)

(d) Remove ball bearing and spacer for top bearing.

(e) Remove wire and holding screws for top bearing holder. (72, 49)

(f) Remove wire and back off dowel screw in top bearing holder. (72, 48)

(g) Remove oil bolt in top bearing holder. (356 or 141A)

(h) Remove top bearing holder.

2. Remove two locking screws from second turbine wheel lock nut and romove lock nut. (41, 433)

3. Bend lock washer clear, and remove oil pump worm and lock washer. (40, 402)

4. Place holding clip on turbine wheels. (454)

5. Remove lower lock nut for second turbine spindle. (391A)

6. Remove washer for lower bearing.

7. Remove 15 balls from lower bearing.



8. Remove cotter pins, nuts, and clamp bolts; and remove lower, middle, and upper bearing locking levers from spindle casing. **(92, 386)**

9. Remove wires and loosen "A" frame screws to spindle casing ¾ of a turn. Insert wedge in split end of spindle casing at lower bearing to spread threads in spindle casing. **(386, 231)**

10. Remove lower bearing from spindle casing. **(452)**

11. Remove inner race for lower bearing.

12. Remove the remaining 15 balls for lower bearing.

13. Remove upper washer for lower bearing.

14. Remove holding clip from turbine wheels, and remove second turbine spindle with turbine wheel. **(454)**

15. Remove lower driving pinion from spindle casing.

16. Remove turbine wheel from second turbine spindle and remove four keys from spindle, prying out with screw driver in milled slots of keys. **(41)**

Note: It may be necessary to use soft lead hammer to loosen wheel.

17. Remove two locking screws and turbine wheel lock nut from first turbine spindle. **(41, 233)**

18. Remove turbine wheel from first turbine spindle.

Note: It may be necessary to use a soft lead hammer to loosen wheel.

19. Remove four keys from first turbine spindle by prying out with screw driver in milled slots of keys. **(41)**

20. Remove wire, screws, and turbine oil guard. **(92, 41)**

21. Remove copper-asbestos compression washer.

22. Remove oil deflector ring, taking care not to distort it.

23. Insert wedge in spindle casing at upper bearing to spread threads, and remove outer race for upper bearing from spindle casing. **(231, 228)**

24. Remove 18 balls for upper bearing.

25. Remove first turbine spindle from spindle casing.

26. Remove upper race for middle bearing.

*27. Remove lower race for upper bearing by tapping with rawhide maul.

28. Remove 15 balls from middle bearing in spindle casing.

29. Remove oil connection, two copper washers, and steel washer from lower end of crosshead. **(141A or 150)**

30. Remove oil connection and copper washer from upper end of crosshead. **(96A)**

31. Remove wire and holding screws for upper "A" frame to spindle casing. **(72, 386)**

32. Place holding clip on main driving gears. **(454)**

33. Remove cotter pins and nuts on studs; and slide engine strut aft on propeller shafts. **(72, 356)**

Note: When removing strut, catch balls in bearing.

34. Remove wire and holding screws for lower "A" frame to spindle casing. **(72, 386)**

35. Remove "A" frames, steel "A" frame thrust washers, and spindle casing from gear train.

Note: When removing the above assembly, it may be necessary to tap the "A" frames lightly with a lead hammer, at the same time holding spindle casing to prevent its falling.

36. Remove middle bearing from spindle casing. **(452)**

37. Place main driving gears in a vertical position. Remove holding clip. **(454)**

38. Remove two outer bronze thrust washers on ends of crosshead.

39. Remove two main driving gears.

40. Remove driving pinion bushings from crosshead.

41. Remove two bronze thrust washers from crosshead inner ends.

42. Remove forward thrust bearing race for after propeller shaft from spindle casing.

43. Remove thrust bearing and after bearing race from after propeller shaft.

44. Withdraw after propeller shaft from inside of forward propeller shaft.

45. Remove forward propeller shaft thrust bearing parts:

(a) Spacer for crosshead bushing.

(b) Retainer and balls.

(c) Inner race (convex).

(d) Bearing washer (concave).

(e) Sleeve and outer race assembled.

46. Remove crosshead and crosshead bushing from after propeller shaft.

47. Remove outer race from sleeve (for forward propeller shaft thrust bearing).

48. Remove U-seal retainer, U-seal, and bushings from forward propeller shaft.

49. Remove forward propeller shaft from overhauling stand and slide off engine strut.

*50. Remove forward strut thrust bearing race from forward propeller shaft. Tap gently with a lead hammer.

*51. Remove after bevel gear from forward propeller shaft.

*52. Remove forward bevel gear from after propeller shaft.

*53. Remove after thrust bearing race from engine strut.

Note: Drive the race out of strut by inserting a piece of ¼-inch round brass stock through holes in strut.

The above completes the disassembly of the main engine.

OVERHAUL, ASSEMBLY, AND TEST

G. Propeller Shafts

1. Place shafts between knife-edge rollers or between centers on shaft straightening press, and with a dial indicator, measure amount out of true by turning shaft slowly (Fig. 189). If shafts are out of true by more than 0.005 inch, mark high spots with chalk.

*2. If above step indicated that shafts are out of true by more than 0.005 inch, place shafts on V-blocks of shaft-straightening press, with chalk mark uppermost. Place a piece of brass stock over portion of shaft to be straightened, and tighten press to straighten shaft (Fig. 190). Re-check alignment as in step 1, above.

3. Clean shafts; blow out all grease holes with air. See that outer and inner bearing surfaces of shafts are clean and smooth. Note if there is any indication of friction on bearing surfaces, in which case it will be necessary to stone rough surfaces smooth.

*H. Forward and After Bevel Gears

1. Dress off any burrs which may be present on propeller-shaft keys.

2. With bench marks on bevel gears lining up with bench marks on shafts, replace bevel gears in shafts. Use a piece of soft brass or copper stock against gears and drive on with a hammer until properly seated.

Note: Great care must be exercised in lining up gears on keys, because if a small amount of metal is sheared off keys while driving gears on shafts, this metal will lodge on shaft shoulders and change longitudinal clearances of shaft assemblies.

*I. Forward Strut Thrust-Bearing Race

1. Examine race for wear or corrosion. If necessary, polish in bench lathe.

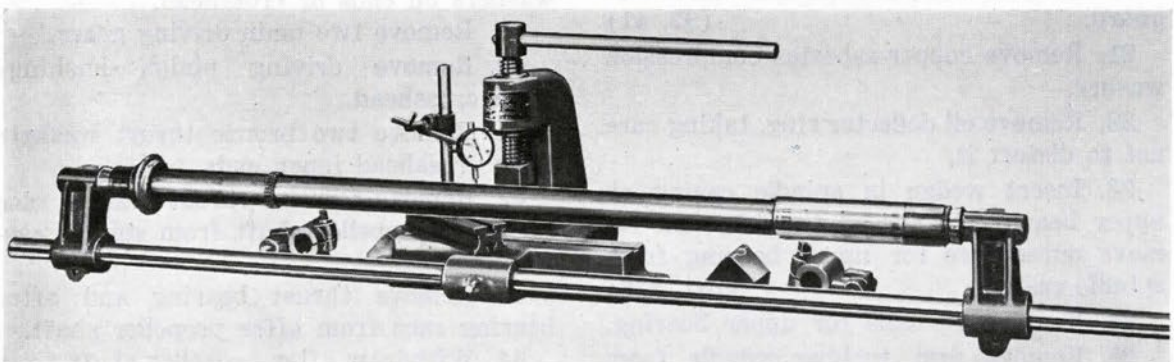

Figure 189

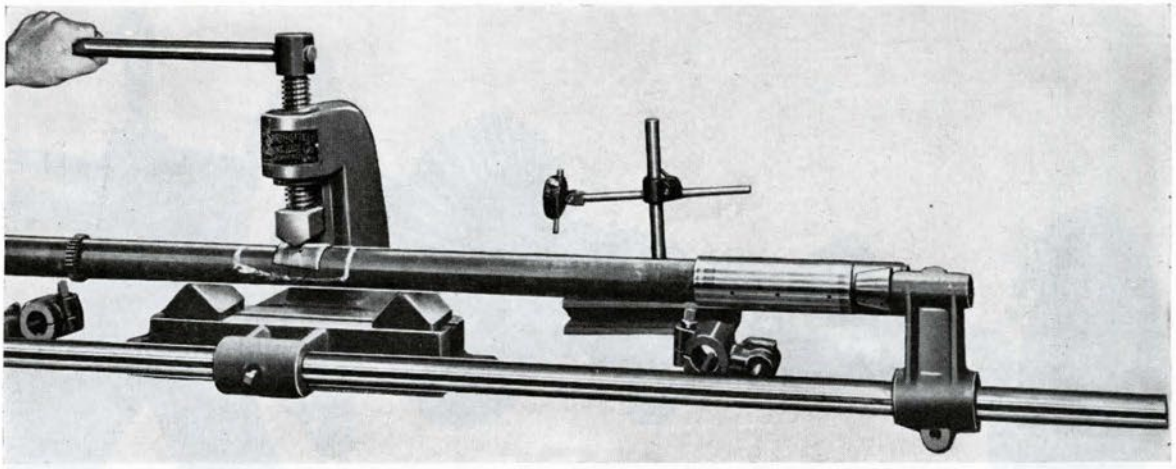

Figure 190

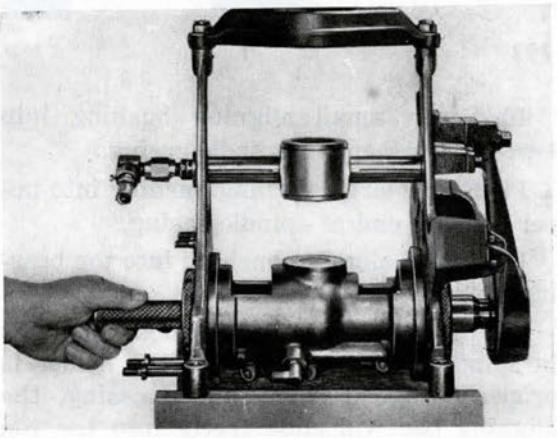

Figure 191

2. Assemble forward strut thrust-bearing race on forward propeller shaft (it may be necessary to tap in place with a soft lead hammer) slipping on from after end of shaft. Bearing surface must face aft, and key slot in race must engage key on shaft.

***J. After Strut Thurst-Bearing Race**

1. Examine race for wear or corrosion. If necessary, polish in bench lathe.

2. Clean race and strut and insert race into strut.

K. Check Alignment of Top Bearing Holder With Spindle Casing (Fig. 191)

1. Place feet of "A" frames on bench and assemble to spindle casing.

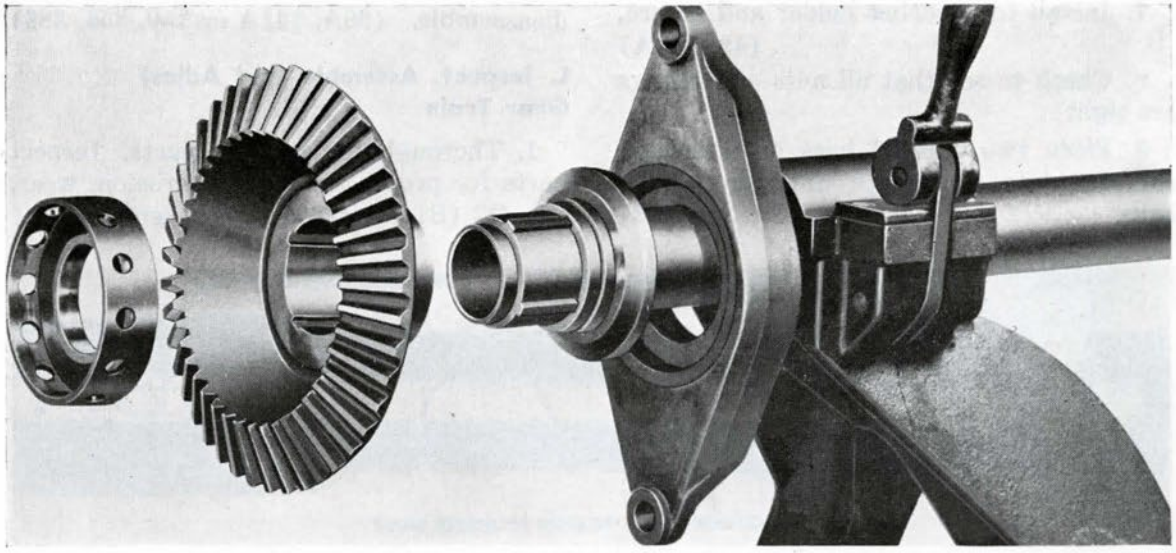

Figure 192

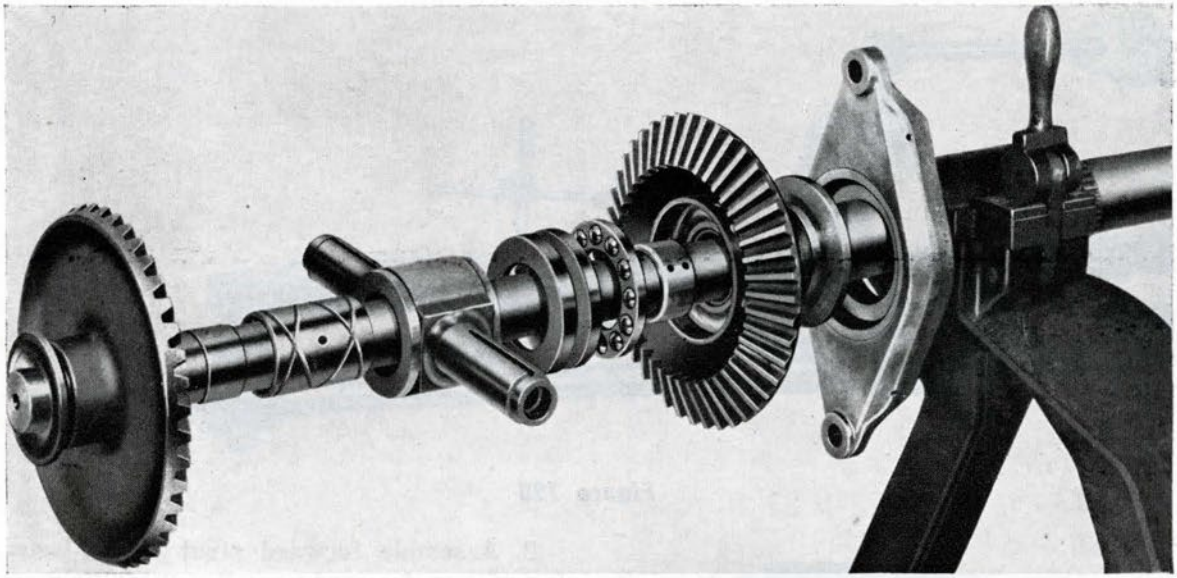

Figure 193

2. Replace holding screws for spindle casing, but do not tighten.

3. Replace steel "A" frame thrust washers.

4. Install crosshead between "A" frames and secure with upper oil connection and washer and lower oil-connection assembly. **(96A, 141A or 150)**

5. Assemble strut to "A" frames and secure with nuts. **(356)**

6. Tighten holding screws for spindle casing. **(386)**

7. Install top bearing holder and secure. **(49, 141A)**

8. Check to see that all nuts and screws are tight.

9. Place two parallel bars on a leveled surface plate, and place unit on parallel bars. **(453)**

10. Screw small aligning bushing into lower bearing end of spindle casing.

11. Screw large aligning bushing into upper bearing end of spindle casing.

12. Insert aligning bushing into top bearing holder.

13. Insert aligning bar through bushings in spindle casing. If top bearing holder is properly aligned with spindle casing, the aligning bar will slide freely into the top bearing-holder aligning bushing.

14. Remove unit from surface plate and disassemble. **(96A, 141A or 150, 356, 386)**

L. Inspect, Assemble, and Adjust Gear Train

1. Thoroughly clean all parts. Inspect parts for proper size, pits, corrosion, wear, etc. Oil (B) all parts before assembling.

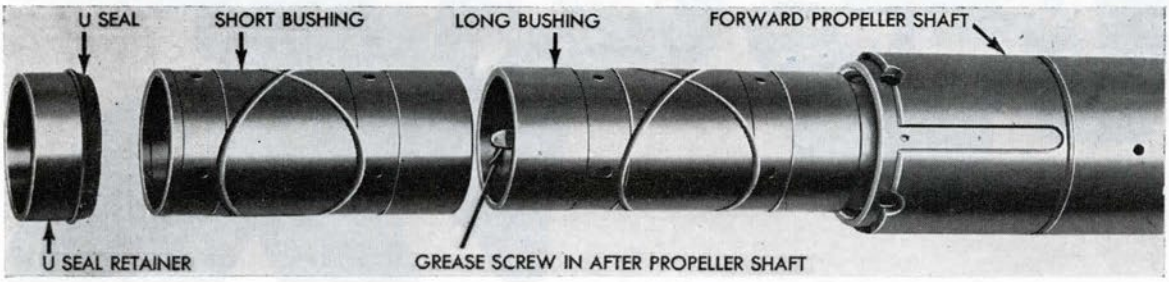

Figure 194

2. Slip engine strut over forward propeller shaft and clamp shaft in overhauling stand.

3. Replace sleeve and outer race (for forward propeller shaft thrust bearing):

(a) Assemble outer race into sleeve, making certain that race is flush with after end of sleeve and that holes in sleeve are nearest crosshead.

(b) Place sleeve and outer race, assembled, into after bevel gear, around forward propeller shaft (Figs. 192 and 193).

4. Assemble parts on after propeller shaft in the following order (Fig. 193):

(a) Crosshead and crosshead bushing —note that recessed end of crosshead bushing is facing aft.

(b) Spacer for crosshead bushing.

(c) Bearing washer (concave).

(d) Inner race (convex).

(e) Retainer and balls.

5. Slide after propeller shaft assembly into forward propeller shaft (Fig. 193). Make certain that bearing washer is properly lined up.

6. Assemble propeller shaft bushings, U-seal, and U-seal retainer in the following order (Fig. 194):

(a) Long bushing.

(b) Short bushing.

(c) U-seal and U-seal retainer—note that U-seal is forward.

Note: Use a spare bushing to push long and short bushings into place before assembling U-seal and U-seal retainer. Damage to U-seal may result if bushings are pushed into place with U-seal and U-seal retainer.

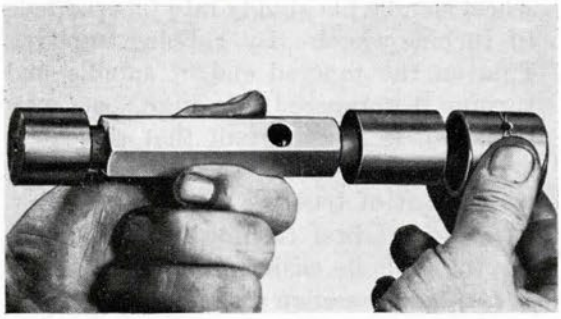

Figure 195

7. Replace two bronze thrust washers on crosshead inner ends—note that rounded surfaces of washers are toward center.

8. Check size of driving-pinion bushings, using GoNoGo plug gage (Fig. 195). **(WE25)**

9. Replace driving-pinion bushings on crosshead.

10. Line up propeller shafts:

(a) Insert aligning tool over ends of shafts, with keys of shaft engaging keyways of tool. Secure tool with nut. **(450, 229)**

(b) Place spirit level on flat part of aligning tool. Loosen clamp on overhauling stand; turn assembly level; and tighten clamp on overhauling stand.

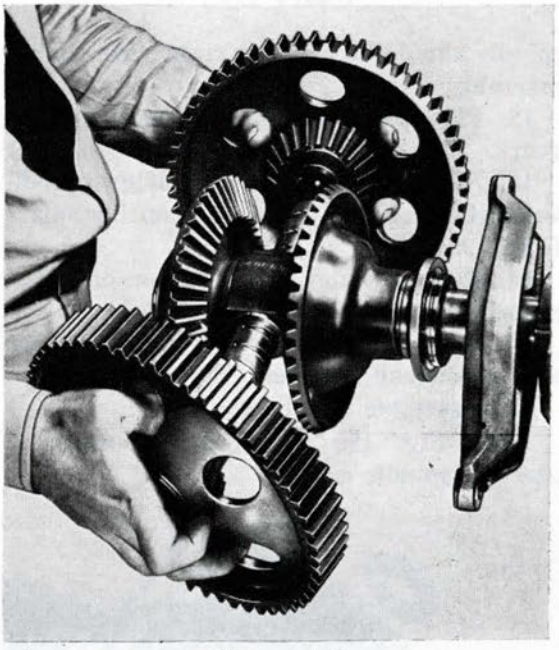

Figure 196

11. Place main driving gears over crosshead spindles and bushings in such a way that when a spirit level is laid across the teeth of both main driving gears and registers level, the driving pinions are in full mesh with the forward and after bevel gears (Figs. 196 and 197).

Note: The main driving gears are not marked for upper or lower, but are easily identified, as the upper gear is darkened by the action of heat. This gear should be assembled on the crosshead spindle having a shallow threaded hole in its upper end. This

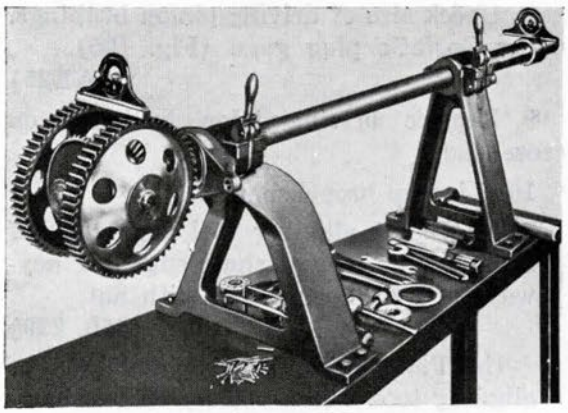

Figure 197

spindle should be on your right side during assembly.

12. Place holding clip over main driving gears. (454)

13. Replace after race (of after propeller-shaft bearing) on after propeller shaft (Fig. 198).

14. Replace balls and retainer on after propeller shaft.

15. Replace main driving gear washers over crosshead spindles (Fig. 198).

16. Assemble spindle casing:

Note: Fig. 199 shows arrangement of parts in spindle casing.

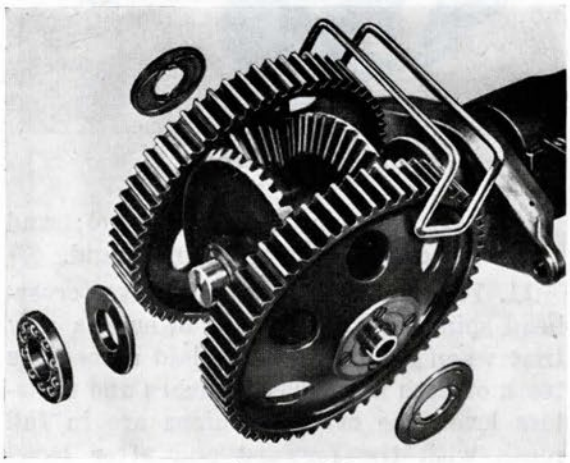

Figure 198

(a) Inspect spindle casing, making certain that dowel pins are tight and straight and that oil channels and hole in oil-connection nipple are clear.

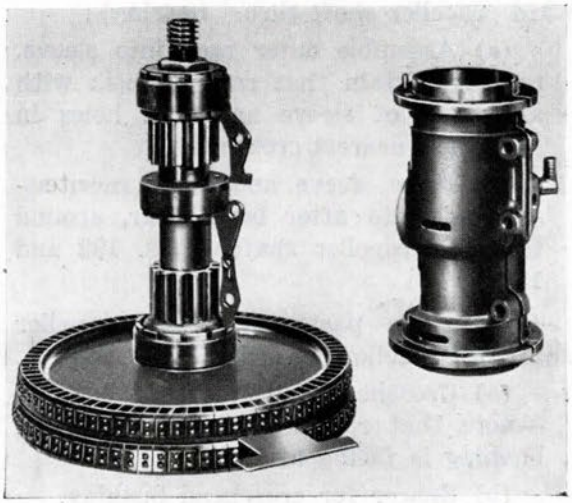

Figure 199

(b) Insert wedge into spindle casing near middle bearing (below threads for race). (231A)

(c) Replace outer race for middle bearing in spindle casing, using depth-gage tool to locate. Remove wedge (Fig. 200). (424, 452)

(d) Replace middle bearing locking lever, bolt, nut, and cotter pin. Do not set up on bolt. (386, 72)

*(e) Replace lower race for upper bearing on upper end of first turbine-wheel spindle.

(f) Replace upper race for middle bearing on end of first turbine-wheel spindle.

(g) Apply grease (E) and place 15 balls in middle-bearing race.

(h) Note that taper on first turbine-wheel spindle fits snugly into tapered hole in turbine-wheel. By rubbing spotting fluid on the tapered end of spindle and turning it in tapered hole, high spots may be noted. It is important that this fit is snug, as otherwise the turbine may wobble out of true.

(i) Insert first turbine spindle assembly into spindle casing (Fig. 201).

(j) Insert wedge into upper bearing end of spindle casing. (231A)

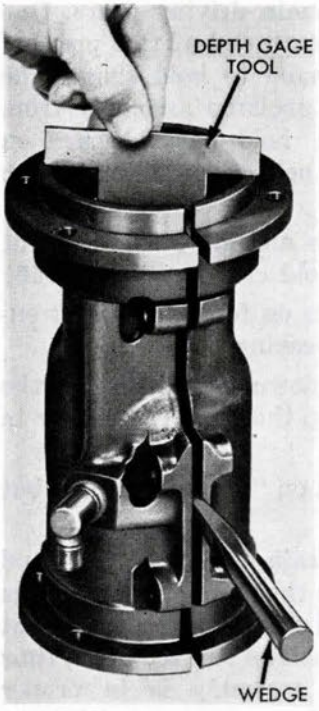

Figure 200

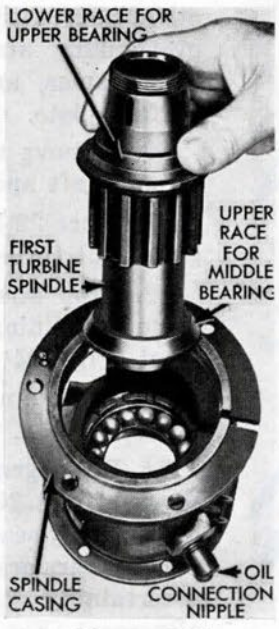

Figure 201

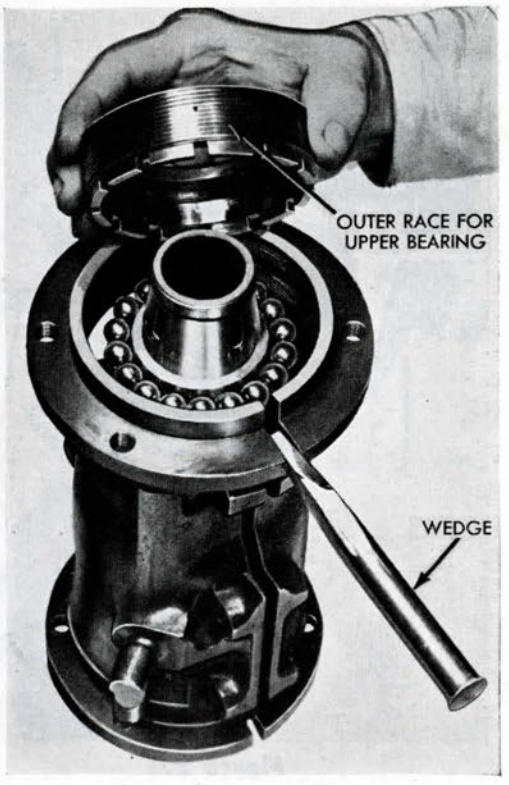

Figure 202

(k) Apply grease (E) and place 18 balls on lower ring for upper bearing.

(l) Replace outer race for upper bearing (Fig. 202).

(m) Screw outer race down hard against balls, until no up-and-down play of first turbine spindle is noted. **(452)**

(n) Observe position of locking notch in relation to slot for upper ball-race locking lever. Unscrew ball race three full notches, lining up nearest notch with locking lever slot. This adjustment should give 0.018 inch end play for first turbine spindle. **(452)**

(o) Replace upper bearing locking lever, bolt, nut, and cotter pin. **(386, 72)**

(p) Test middle bearing for trueness by placing spindle casing on surface plate and using dial indicator on top of first turbine spindle.

17. Replace forward race (for after propeller-shaft thrust bearing) on spindle casing.

18. Replace steel "A" frame thrust washers in "A" frames.

19. Line up upper "A" frame with spindle casing and crosshead, and tap into place with soft lead hammer (Fig. 203).

20. Replace washer and upper oil connection for crosshead, but do not tighten. **(96A)**

21. Replace spindle-casing holding screws and set up hand-tight.

22. Line up lower "A" frame with spindle casing and crosshead, and tap into place with a soft lead hammer.

*23. Replace packing in lower oil connection assembly:

Note: If, while running main engine in test stand, it is noticed that lower oil-connection assembly leaks, even with packing-gland nut set up tight, it will be necessary to renew packing.

(a) Remove wire and keep screw for packing-gland nut. **(72, 41)**

(b) Unscrew packing-gland nut and slide clear. **(141A)**

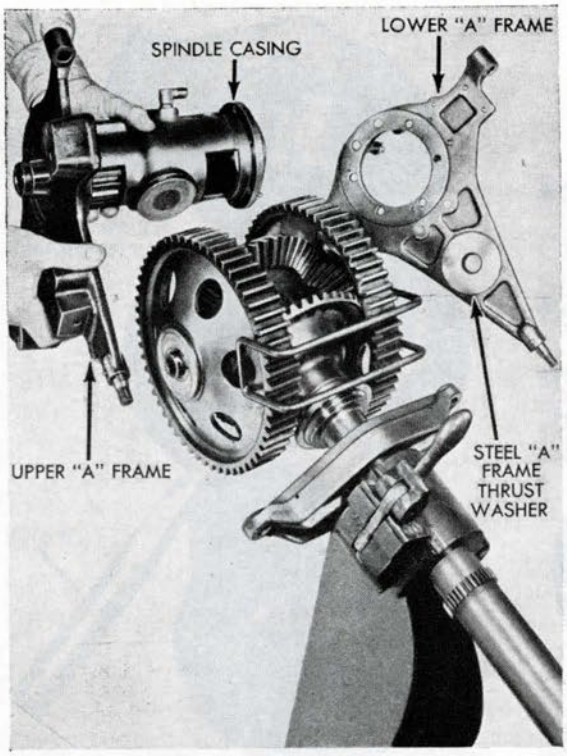

Figure 203

(c) Remove old packing and repack, using about six inches of 3/32-inch diameter asbestos packing. **(482)**

(d) Replace gland nut and tighten. **(141A)**

(e) Replace keep screw and secure with wire. **(41, 72)**

24. Replace small copper washer, steel washer, and large copper washer, in order named, on lower oil connection.

25. Replace lower oil-connection assembly in crosshead, but do not set up tight. **(141A or 150)**

26. Replace spindle-casing holding screws and set up hand-tight.

27. Place engine strut over "A" frame bolts and screw nuts in place temporarily. **(356)**

28. Place parallel bars on "A" frames. (Pins in parallel bars fit into "A" frame holes for bulkhead studs.) **(453)**

29. Unclamp and remove main engine assembly from overhauling stand and place on leveled surface plate, shaft end up and parallel bars resting on surface plate. **(453)**

Note: It is desirable to have three men for the above step. Insert a piece of stock through holes in main driving gears. One man should be at each end of this piece of stock, using one hand to hold shaft. The other man should unclamp assembly from overhauling stand, hold parallel bars on "A" frames, and help place assembly on surface plate.

30. Remove nuts and slide engine strut up on shaft and hold clear. **(356)**

31. Place 22 balls on forward race of engine-strut thrust bearing.

32. Drop strut down over balls, at the same time lining up the "A" frame bolts in strut (Fig. 204).

33. Replace nuts on "A" frame bolts, but do not tighten.

34. Rock gear-train assembly by hand several times. Note that legs on "A" frames are properly seated on parallel bars and that parallel bars are flush on surface plate, thus ascertaining that assembly is in proper alignment (Fig. 205). **(WE2A)**

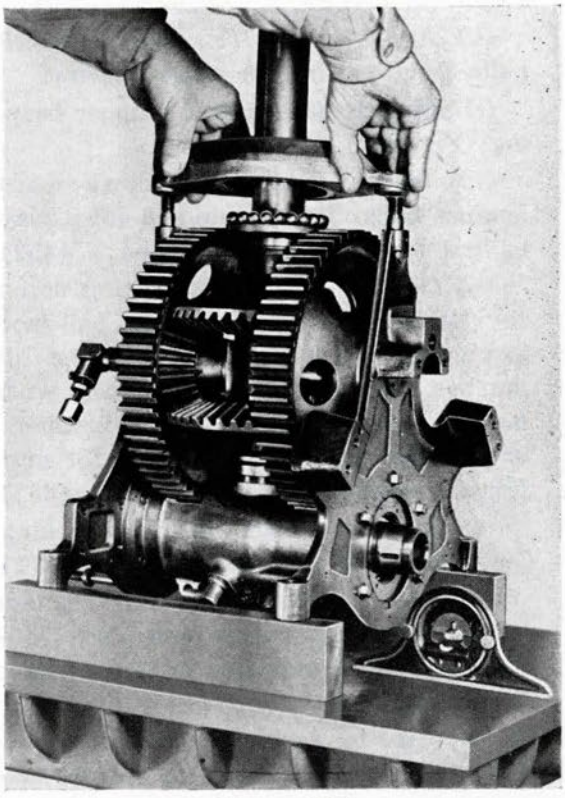

Figure 204

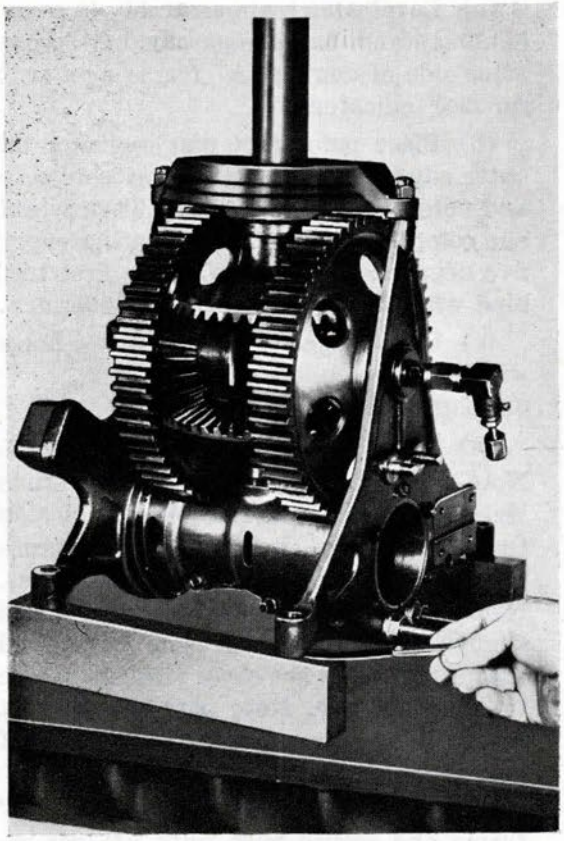

Figure 205

35. Proceed to tighten and secure nuts and screws as follows:

(a) Nuts for bolts for "A" frames to strut. **(356)**

(b) Cotter pins for above. **(72)**

(c) Oil connection, lower. **(141A or 150)**

(d) Oil connection, upper. **(96A)**

(e) Holding screws for spindle casing and "A" frames, tightening up evenly. **(386)**

(f) Wire holding screws securing "A" frames to spindle casing. **(72)**

36. Place dial indicator on after face of after bevel gear and set indicator to zero. Lift gear upward as far as it will go and note reading on dial indicator. This reading (clearance) should be 0.025 inch to 0.035 inch. If not, note if bearing races for engine strut balls are properly seated against shoulder of shaft and recess in strut (Fig. 206).

37. Place dial indicator on one tooth of forward bevel gear and set indicator to zero. Lift gear upward as far as it will go and note reading on dial indicator. This reading (clearance) should be 0.025 inch to 0.045 inch. If not, it will be necessary to disassemble and find cause. (See Note under step *H-2 for possible cause.)

38. Remove assembly from surface plate; remove parallel bars from "A" frames and clamp gear train assembly in overhauling stand.

39. Replace oil-deflector ring and copper-asbestos compression washer.

Note: Figure 207 shows arrangement of parts covered by steps 39 through 41.

40. Replace turbine oil guard and secure with four screws. Wire screw heads. **(41, 72)**

Note: Place special screw in countersunk hole on the forward side of guard.

41. Install first turbine-wheel:

(a) Check parting of segments in first turbine wheel.

(b) Check turbine wheel for trueness by laying it on a surface plate and trying 0.003-inch feeler gage between outer edge of wheel and surface plate. **(WE2A)**

(c) Insert four keys in keyways on first turbine spindle. Note that key num-

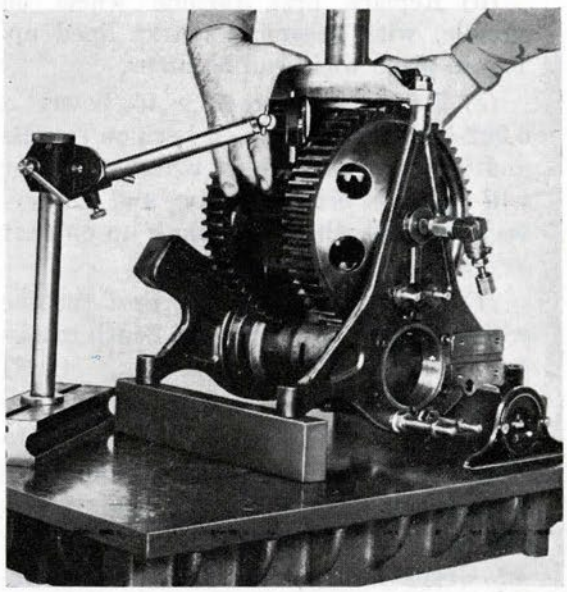

Figure 206

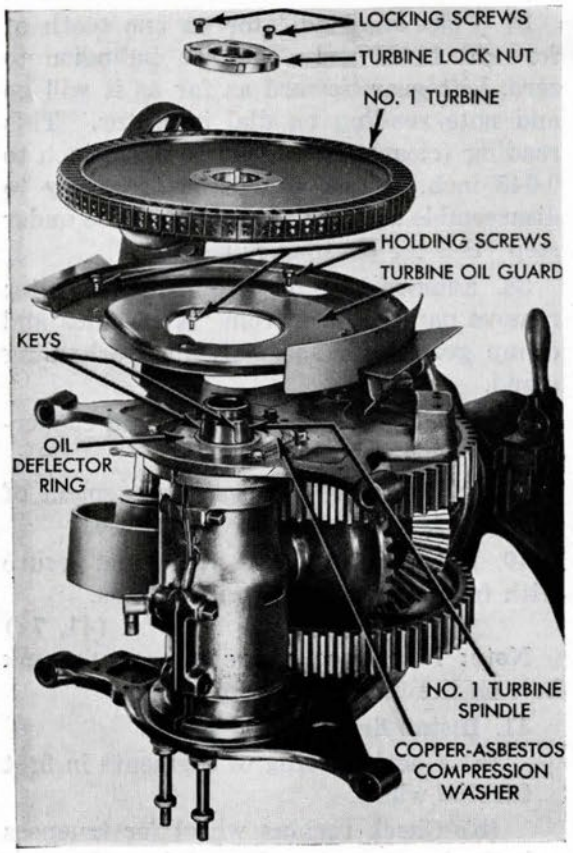

Figure 207

bers correspond to keyway numbers and that milled slots are on top for insertion of screw driver for removal.

(d) Replace first turbine wheel on spindle, with assembly marks lined up. Tap in place with lead hammer.

(e) It is good practice to insert a 0.002-inch feeler between keys on spindle and keyways in turbine wheel. If feeler will not pass between a key and its keyway, turbine wheel will hang up on that key and will not run true.

(f) Replace lock nut for first turbine wheel, setting up tight until bench marks are in line. (433)

(g) Replace two locking screws for lock nut. (41)

(h) Turn first turbine wheel and make certain that it does not rub against turbine oil guard or upper "A" frame.

42. Check first turbine wheel for alignment with spindle and bearings:

(a) Level gear train assembly in overhauling stand. Lay one parallel bar across after side of engine "A" frame as a seat for dial indicator.

(b) Place pointer of dial indicator on outer edge of wheel. Set indicator on zero and note position with chalk. Turn wheel one complete revolution, indicating every five degrees. The wobble of the first turbine wheel should not exceed 0.005-inch.

(c) Upset edges of locking-screw holes with a center punch.

43. Turbine bulkhead:

(a) Examine threads on nozzle studs. Note that studs are tight. Loose studs should be resoldered. Examine nipples on turbine bulkhead. Remove burrs or cross threads with thread combs or finger dies. Note that bearing surface for speed change mechanism is free of burrs and that screw holes are clean (not applicable to Mk 23 Type). Note particularly that nozzle flange seat is clean and free of burrs.

(b) Replace turbine bulkhead on "A" frame and secure with nuts. Do not replace cotter pins. (356)

44. Adjust clearance between first turbine wheel and nozzle plate:

(a) Clean nozzle flange seat, and, with depth micrometer, measure distance from flange seat to turbine wheel, turning wheel to obtain measurements in several

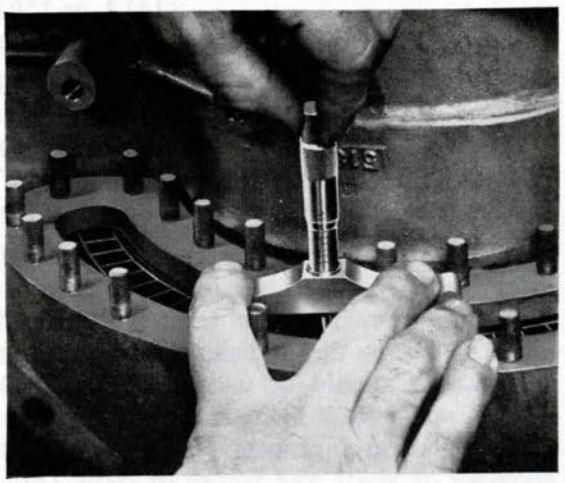

Figure 208

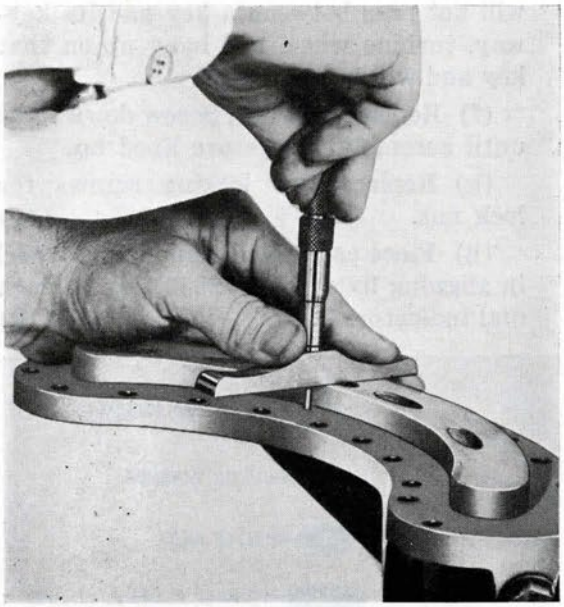

Figure 209

wheel positions (Fig. 208). Compute the average of about five readings. **(WE9)**

(b) With depth micrometer, measure the distance that the nozzle plate projects out from the nozzle flange. Take these measurements opposite each nozzle hole and compute the average of the readings (Fig. 209). **(WE9)**

(c) With micrometer, measure thickness of gasket at several points and compute the average of the readings (Fig. 210). **(WE5)**

(d) Use the following formula to obtain the clearance between the first turbine wheel and the nozzle plate:

Clearance = average reading of step (a) plus average reading of step (c) minus average reading of step (b). The clearance, to be correct, must be 0.057-inch to 0.062-inch.

Example: Assume that the average of readings taken in step (a) is 0.471-inch; the average thickness of gasket, step (c), is 0.028-inch; and the average of readings taken in step (b) is 0.439-inch.

Clearance = 0.471-inch plus 0.028-inch minus 0.439-inch = 0.060-inch.

This clearance is satisfactory because it is within the range indicated above (0.057-inch to 0.062-inch). Should the clearance vary from that allowed, it will be necessary to readjust the middle and upper bearings. The procedure is as follows:

(e) Turn gear-train assembly right-side-up; remove turbine bulkhead and locking levers for middle and upper bearings. **(356, 386, 72)**

(f) Should less clearance be desired, move middle and upper bearings to the right by the same amount; should more clearance be desired, move middle and upper bearings to the left by the same amount. Turning the bearings one notch in either direction will increase or decrease the clearance by 0.006-inch.

(g) Example: Suppose 0.010-inch more clearance is desired between nozzle plate and first turbine: Slip wedge between split portion of spindle casing in line with middle bearing and observing notch for line-up with split in casing; turn middle bearing race two notches to the left; change wedge to split in line with upper bearing, and turn upper bearing race two notches to the left.

(h) When both bearing races have been turned two notches to the left, replace locking levers and proceed to reassemble. After measuring, it will be found

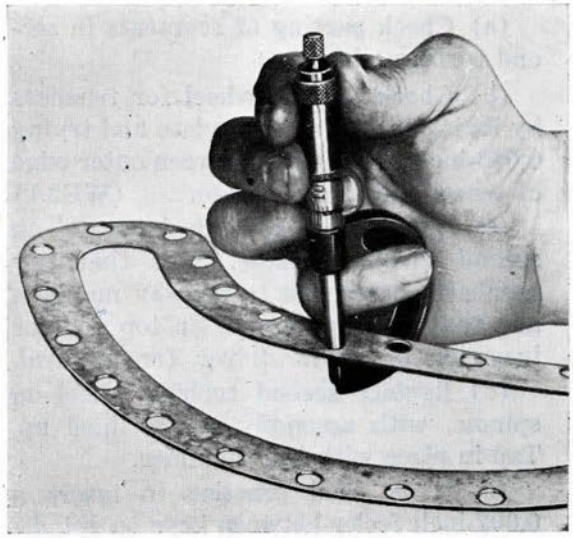

Figure 210

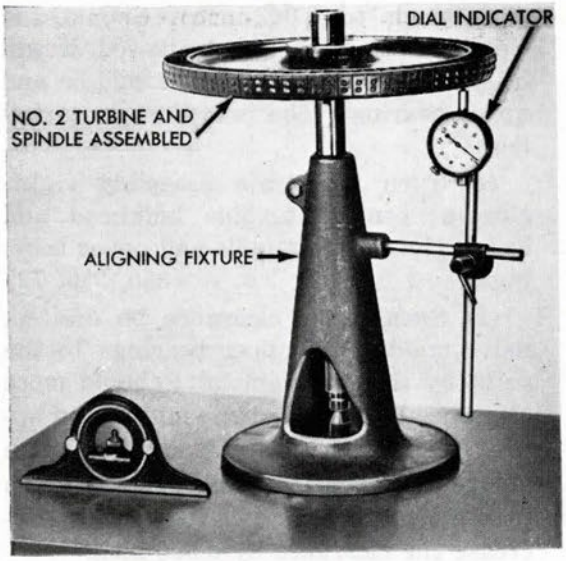

Figure 211

that clearance has been increased by 0.012-inch, which is the closest to clearance desired.

Note: Should it be difficult to turn bearing races in the spindle casing when making the above adjustments, even when using wedge in split portion of spindle casing, it may be necessary to remove the turbine and oil guard and back off the holding screws for "A" frame to spindle casing about two turns each.

(i) Remove turbine bulkhead. **(356)**

45. Assemble second turbine wheel on spindle, and check alignment:

(a) Check parting of segments in second turbine wheel.

(b) Check turbine wheel for trueness by laying it on a surface plate and trying 0.003-inch feeler gage between outer edge of wheel and surface plate. **(WE2A)**

(c) Insert four keys in keyways on second turbine spindle. Note that key numbers correspond to keyway numbers and that milled slots are on top end for insertion of screw driver for removal.

(d) Replace second turbine wheel on spindle, with assembly marks lined up. Tap in place with lead hammer.

(e) It is good practice to insert a 0.002-inch feeler between keys on spindle and keyways in turbine wheel. If feeler will not pass between a key and its keyway, turbine wheel will hang up on that key and will not run true.

(f) Replace lock nut. Screw down tight until assembly marks are lined up.

(g) Replace two locking screws for lock nut. **(41)**

(h) Place assembled spindle and wheel in aligning fixture (SG 2853), and attach dial indicator. **(WE10)**

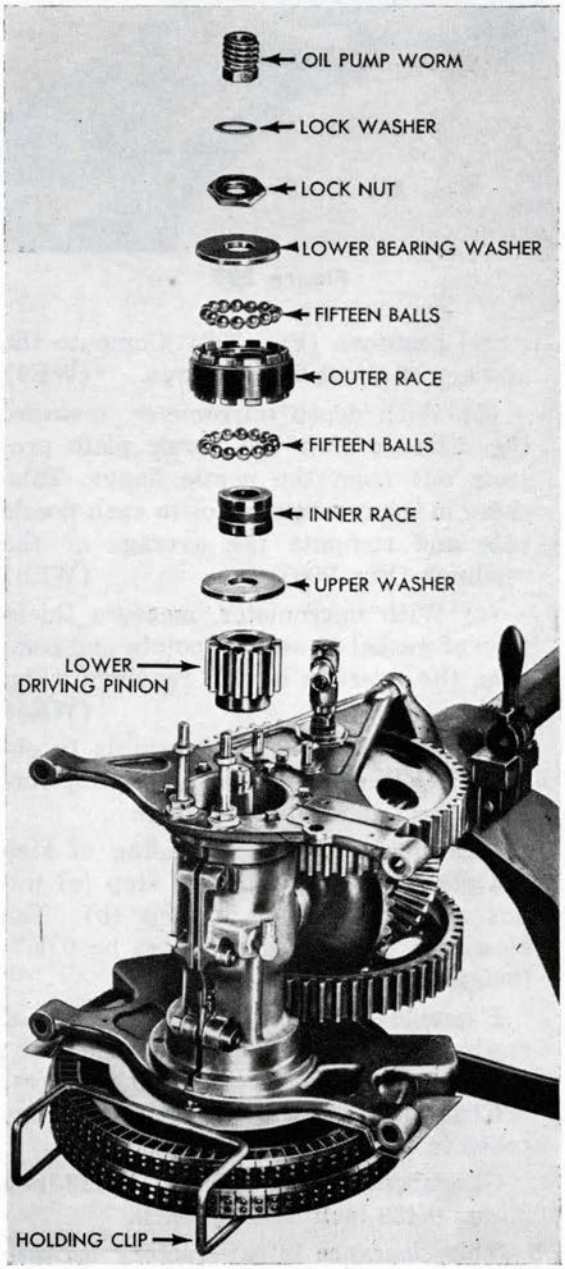

Figure 212

(i) Adjust indicator to outer edge of turbine wheel and set on zero (Fig. 211).

(j) With chalk, mark a reference point in line with indicator pointer. Turn wheel one complete revolution and read dial indicator every five degrees. Wobble of wheel should not exceed 0.005-inch.

(k) Remove wheel and spindle assembly from fixture.

(l) Upset edges of locking screw holes with a center punch.

46. Assemble second turbine wheel and spindle to gear train:

(a) Insert second turbine spindle into first turbine spindle.

(b) Turn gear train over and place holding clip over edges of both turbine wheels (Fig. 212). (454)

(c) Replace two keys for lower driving pinion on second turbine spindle. Note that numbers on keys correspond with numbers in key slots and that milled ends of keys are facing out.

(d) Replace lower driving pinion on spindle. Note that assembly marks are lined up and that gear end of pinion is facing out.

47. Assemble lower turbine spindle bearing (Fig. 212):

(a) Replace upper washer for lower bearing.

(b) Replace inner race.

(c) Place 15 balls on upper washer, around inner race.

(d) Replace outer ball race. Screw race down to balls and back off about one turn (to give clearance between turbines).

(e) Place 15 balls in outer race.

(f) Replace lower bearing washer.

(g) Replace lower lock nut for second turbine spindle and tighten. (391A)

(h) Replace lock washer for oil-pump worm.

(i) Replace oil-pump worm and tighten. (402)

(j) Insert screw driver through one of cutaway spaces in lock nut and bend lock washer up flush with face of oil pump worm to lock worm. (41)

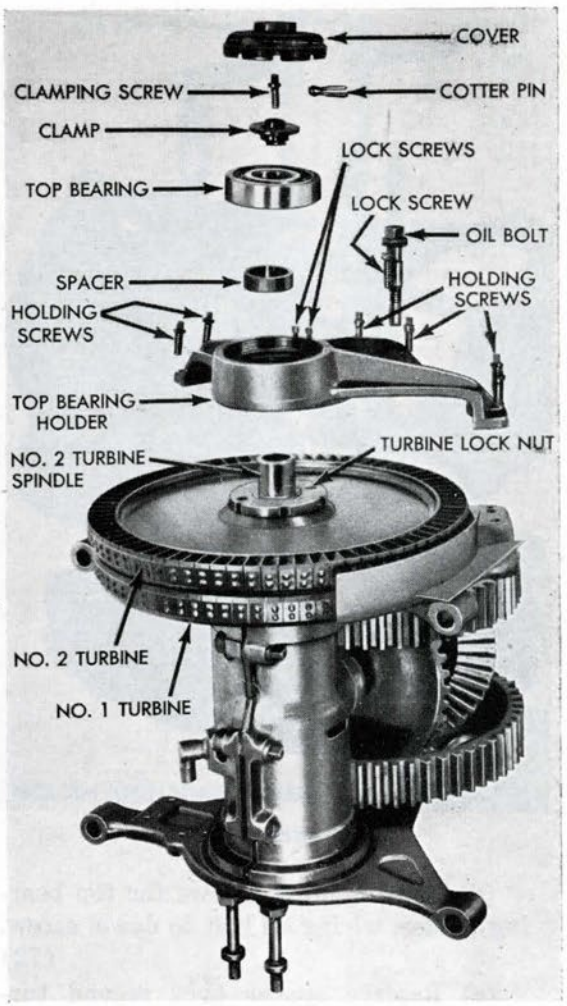

Figure 213

48. Install top bearing holder and top bearing (Fig. 213):

(a) Turn assembled gear train right-side-up. Clean and inspect top bearing holder. Note that dowel pins are straight and tight in top bearing holder. Note that small oil restriction in the top bearing holder is clear. If necessary to free this hole, use number-80 drill.

(b) Replace top bearing holder on upper "A" frame and secure with six holding screws and one dowel screw. (49, 48)

Note: Dowel screw fits into hole in the after arm of the bearing holder.

(c) Replace washer and oil bolt in top bearing holder. (141A)

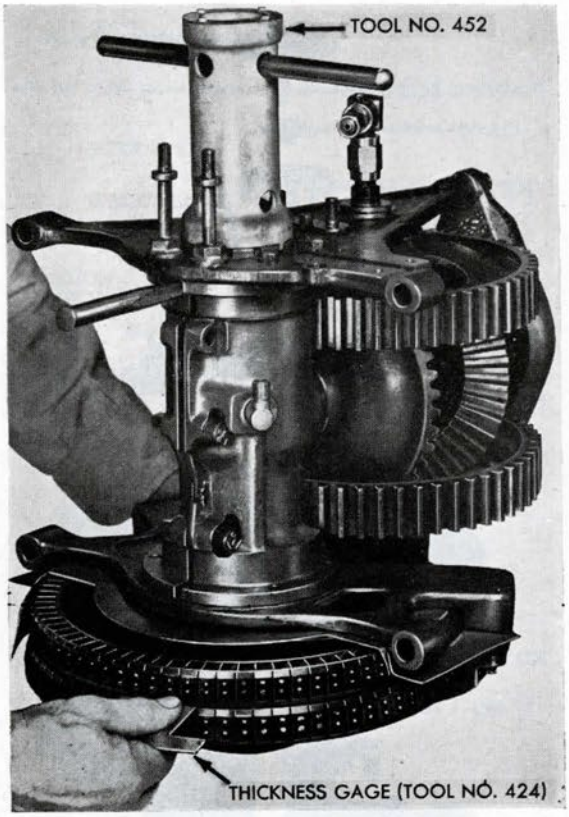

Figure 214

(d) Wire holding screws for top bearing holder, wiring oil bolt to dowel screw. **(72)**

(e) Replace spacer over second turbine-wheel spindle. Note that beveled end of spacer is assembled in down position.

(f) Replace top bearing on spacer.

(g) Replace clamp for top bearing in slot in end of second turbine-wheel spindle.

(h) Replace screw for clamp and secure with cotter pin. **(49, 41, 72)**

49. Adjust clearance between first and second turbines:

(a) Insert wedge in split in spindle casing and turn lower ball race up or down until proper clearance (0.060-inch) is obtained, using two thickness-gage tools at opposite points between the turbine-wheels (Fig. 214). **(231A, 452, 424)**

(b) If notch in ball race is out of line with split in spindle casing, with clearance between turbines equal to 0.060-inch,



Figure 215

turn to nearest notch in line for more or less clearance, as a plus or minus tolerance between one notch is allowed.

(c) Replace lower bearing locking lever, clamp screw, nut, and cotter pin. **(386, 72)**

50. Measure clearances in top bearing holder:

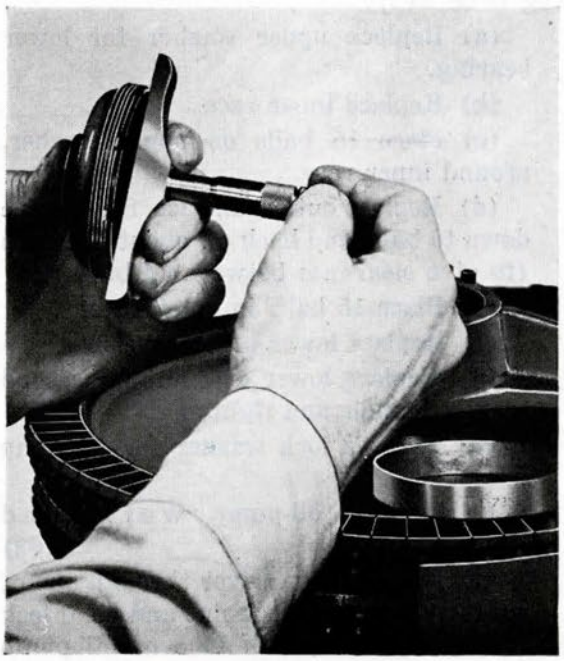

Figure 216

(a) Place test ring on machined seat in top-bearing holder. **(WE235)**

(b) Place micrometer depth gage across top of test ring and measure distance to top of clamping screw with second turbine spindle raised (Fig. 215). **(WE9)**

Note: The above measurement will be approximately 0.153-inch.

(c) With top bearing cover upside-down, place micrometer depth gage across seat on threaded end of cover, and measure distance to center of cover (Fig. 216). **(WE9)**

Note: The above measurement will be approximately 0.437-inch.

(d) Measure width of test ring. It should be about 0.500-inch. **(WE5)**

(e) Subtract measurement found in step (c) from width of test ring. Example: 0.500
0.437
0.063

Note: The difference obtained by the above subtraction gives the amount by which the test ring height (width) differs from the depth of the cover. In this case, the difference is 0.063-inch.

(f) Subtract difference found in step (e) from measurement found in step (b). Example: 0.153
0.063
0.090

Note: The above computation gives the clearance which exists between the clamping screw and the inside of the cover when the latter is assembled to the top bearing holder and when the engine is running. In the example, the clearance is 0.090-inch. To be satisfactory, the clearance must be not less than 0.050-inch.

(g) Place micrometer depth gage across top of top bearing holder and measure distance to inside shoulder of bearing holder. **(WE9)**

Note: The above measurement will be approximately 0.316-inch.

(h) With micrometer depth gage still across top of bearing holder, raise second turbine spindle, and measure distance to top of bearing. **(WE9)**

Note: The above measurement will be approximately 0.272-inch.

(i) Subtract reading found in step (h) from reading found in step (g). Example: 0.316
0.272
0.044

Note: The above difference gives the distance from the bearing to the inside shoulder of the bearing holder when the engine is running.

(j) With top bearing cover upside-down, place micrometer depth gage across seat on threaded end of cover, and measure distance to inside shoulder of cover. **(WE9)**

Note: The above measurement will be approximately 0.120-inch.

(k) Subtract difference found in step (i) from reading found in step (j). Example: 0.120
0.044
0.076

Note: The above computation gives the clearance which exists between the bearing and the shoulder of the cover when the latter is assembled to the top bearing holder and when the engine is running. In the example, the clearance is 0.076-inch. To be satisfactory, the clearance must be not less than 0.050-inch.

51. Replace cover and tighten. Tighten lock screws for cover and wire screw heads. **(13-14, 41, 72)**

M. Replace Oil Pump (Fig. 217)

Note: See step S for disassembly, overhaul, assembly, and test of oil pump.

1. Mesh teeth of worm wheel with oil-pump worm, and replace oil pump on studs of lower "A" frame.

2. Replace four nuts on studs for oil-pump and tighten. Secure nuts with cotter pins. **(141A, 41, 72)**

3. Connect lower oil connection assembly to oil-pump. **(141A)**

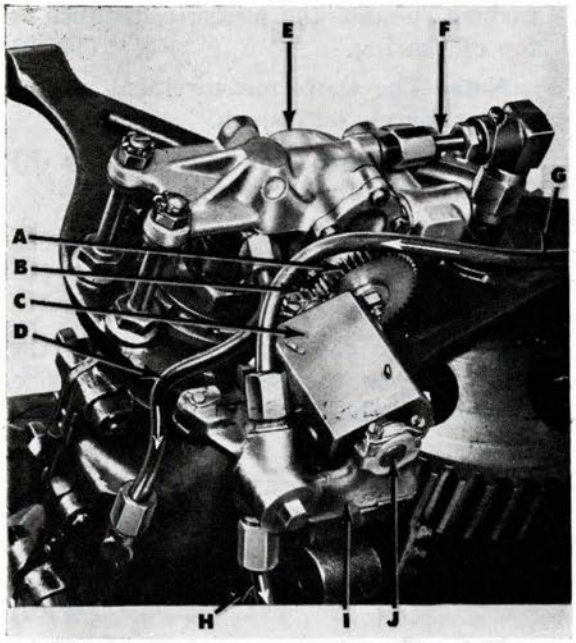

Figure 217—Oil Pump Governor and Piping Assembly—(A) Governor gear (on oil pump); (B) Gear on governor; (C) Governor body assembly; (D) Oil to spindle casing; (E) Oil pump; (F) Lower oil-connection assembly; (G) Air from starting gear; (H) Air to reducing valve; (I) Governor bracket; (J) Journal cap

4. Replace oil pipe from oil-pump to spindle casing, and secure. (141A)

N. Replace Governor Bracket and Governor Body Assembly (Fig. 217)

Note: For disassembly, overhaul, assembly, and test of governor, see step T.

1. Replace spring and spring button in lower "A" frame.

2. Replace governor bracket and secure with holding screws and wire. (49, 72)

3. Replace governor body assembly.

4. Replace journal caps and secure with holding screws and wire. (41, 72)

O. Replace Pipes on Governor Bracket (Fig. 217)

1. Replace pipe, manifold to bracket, (from starting gear). (141A)

2. Replace pipe, bracket to turbine bulkhead. (141A)

P. Replace Turbine Bulkhead and Pipes on After Side of Turbine Bulkhead

1. Replace turbine bulkhead on engine "A" frames and secure with nuts and cotter pins. (356, 41, 72)

2. Connect starting-gear return pipe (from governor bracket) to nipple on after side of bulkhead. (141A)

3. Replace gyro spin pipe on nipple on after side of bulkhead. (229)

4. Replace three air pipes on nipples on after side of turbine bulkhead to manifold for the following:

(a) Air strainer. (141A)

(b) Control valve. (141A)

(c) Starting gear. (141A)

Note: These three pipes are clamped together, and it should not be necessary to separate them for assembly.

5. Connect preheater pipe to nipples on bulkhead and tighten. Secure preheater pipe to top-bearing holder and upper "A" frames with screws and wire. (134, 49, 64, 72)

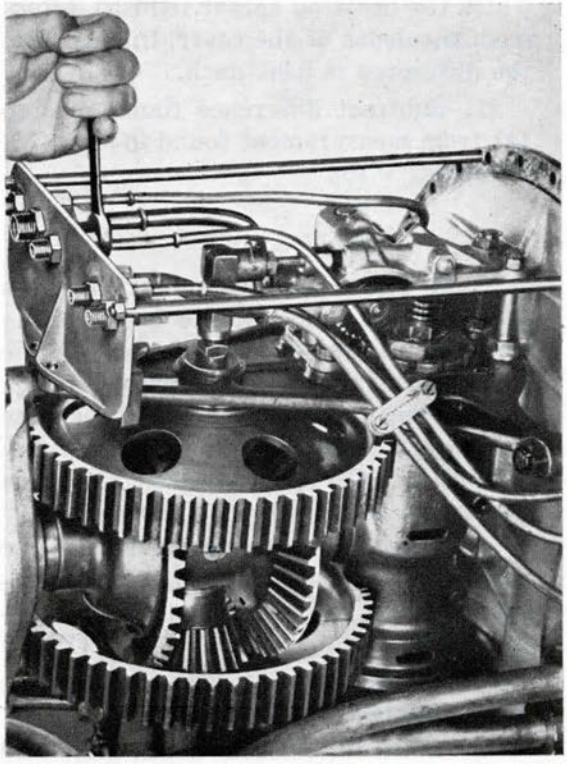

Figure 218

Q. Line up Pipes to Manifold

1. Clamp aligning fixture (SG 2852) loosely on lower "A" frame.

2. Assemble spacing rods to aligning fixture and slide fixture on "A" frame until spacing rods contact turbine bulkhead. Clamp fixture tightly on "A" frame. **(72)**

3. Line up and connect pipes to nipples on aligning fixture and tighten (Fig. 218). **(229, 141A)**

4. Tighten pipe nuts on turbine bulkhead nipples. **(229, 141A)**

5. Disconnect pipes from aligning fixture and remove fixture. **(229, 141A, 72)**

The main engine is now ready for test.

R. Test Main Engine

1. Turn on heater switch and allow water in preheater of Main Engine Test Stand to come to 205 degrees Fahrenheit.

2. Install tail bearing sleeve and adapter ring.

3. Install test nozzle and test plate on turbine bulkhead.

4. Install main engine in test stand.

5. Connect air pipe and gage pipe to test nozzle.

6. Connect oil pipe from oil nipple in drain pan of test set (this nipple leads to oil tank) to oil pump on main engine. **(144, 229)**

7. Fill oil cup on tail bearing with oil (B).

8. Fill oil tank on panel board with oil (B) and open oil valve.

9. Crack air inlet valve until 10 p.s.i. nozzle pressure is obtained, and permit engine to run at slow speed until oil pump has forced oil to all parts of the system.

10. Place guard over engine and tighten down wing nuts.

11. Open air inlet valve more until engine speed, as read on hand tachometer held to after propeller shaft, is at test speed of 700 r.p.m.

12. Keep engine running at test speed for two minutes, and listen to engine. (With a little experience, one can judge from the sound of the running engine whether or not the bearing clearances are correct).

13. Find the run-down time by starting stop watch and closing air inlet valve at the same time. Note time when engine stops completely. The run-down time should not be less than 55 seconds.

14. After satisfactory test has been made, turn off switch for preheater and turn off oil valve.

15. Remove guard from engine.

16. Disconnect air pipe and gage pipe from test nozzle.

17. Disconnect oil pipe.

18. Connect suction pipe on pump (manifold to pump). **(229)**

19. Remove main engine from test stand.

20. Remove test nozzle from turbine bulkhead.

The above completes the overhaul, assembly and test of the Main Engine, ready for assembly in the afterbody.

S. Oil Pump

1. Test oil pump:

(a) Fill supply tank on Universal Oil Pump Test Stand with oil (B) by pouring oil into measuring tank and opening drain valves. Note that oil supply valve is closed.

Note: The temperature of the oil should be about 80 degrees Fahrenheit.

(b) Install short pinion on motor shaft. **(41)**

(c) Install proper suction-pipe assembly on test stand and connect vacuum-gage lead to it. **(229)**

Note: It is important that all connections in the suction-pipe assembly be absolutely tight; otherwise, an improper vacuum reading will result.

(d) Mount pump on test stand, and connect suction pipe to pump. Draw up on holding screws evenly, noting that gears align properly. Turn supporting screw up until it contacts oil-pump body. Adjust supporting screw to obtain proper mesh of gears. **(217)**

(e) Connect oil delivery pipes from pump to test stand. **(141A)**

(f) Fill pump and pipe system with oil by opening supply valve; open gage pet cocks and start motor. Note that all connections are tight, and that pump is delivering oil to the measuring tanks. Stop motor.

(g) Close supply valve. It is important that this valve is closed tight in order to obtain an accurate vacuum reading.

(h) Start motor and allow pump to run at 440 to 445 r.p.m. until a constant reading is obtained on the vacuum gage. This vacuum should be not less than 25 inches of mercury.

Note: Most frequent causes of leakage are in order named:

(1) Leakage around pump shaft bearings. To remedy, install an oversize pump shaft.

(2) Excessive clearance between pump gears and cover. To remedy, lap seat for cover on pump body.

(3) Leakage around plug in suction chamber. To remedy, change washer under plug.

(i) Stop motor.

(j) Open supply valve.

(k) Drain all oil from measuring tanks; then close drain valve.

(l) Start motor and run pump at 440 to 445 r.p.m. for one minute.

Note all gage readings during the run. They should be not less than the minimum values listed below:

Minimum Vacuum
(Inches of Mercury)

On Test	Pumping Oil
25	7

Minimum Delivery Pressures
(P.S.I.)

Crosshead	Turbine Spindle
28	32

(m) Stop motor at end of one minute, and note quantities of oil in measuring tanks. These quantities should be not less than the minimum values listed below:

Minimum Oil Delivery
(Pints)

Crosshead	Turbine Spindle	Total Delivery
1.5	1.6	3.1

(n) Close supply valve.

(o) Disconnect all pipes from oil pump and remove pump from test stand.

(229, 141A, 217)

The above test is made to facilitate inspection of condition during overhaul.

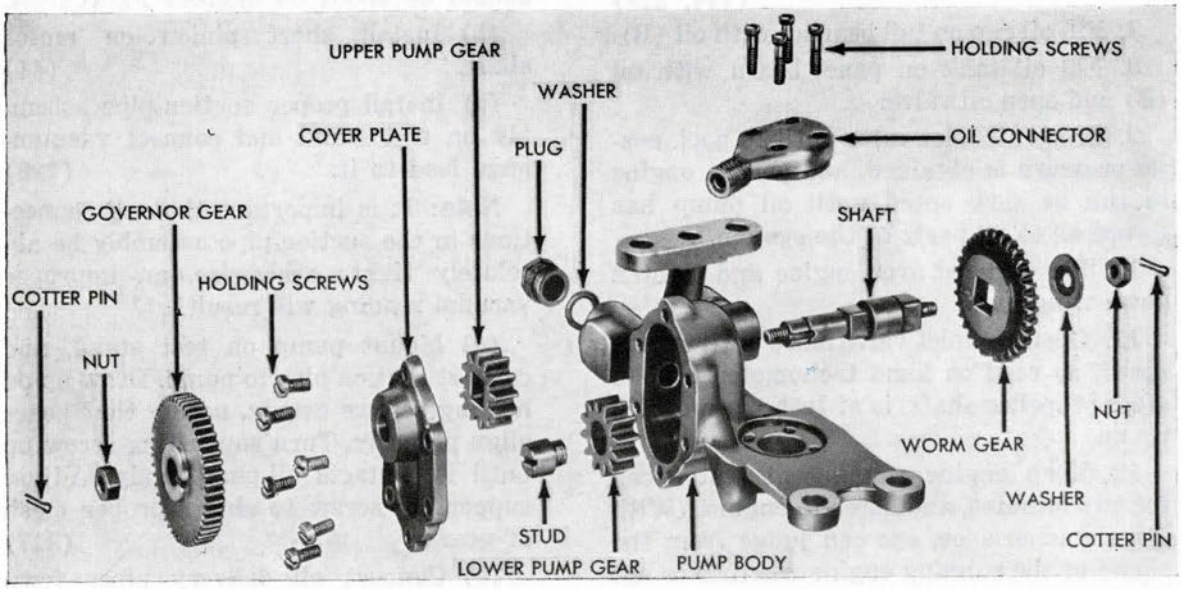

Figure 219

2. Disassemble oil pump:

(a) Remove cotter pin and nut for governor gear on oil-pump shaft. **(72, 389)**

(b) Pry off governor gear. **(40)**

(c) Remove six screws and cover plate. **(41)**

(d) Remove worm gear and shaft assembly.

(e) Remove upper pump gear.

(f) Remove stud and lower pump gear. **(40)**

(g) Remove four screws and oil connection (to spindle casing). **(41)**

(h) Remove cotter pin, nut, washer, and worm gear from shaft. **(72, 389)**

(i) Remove plug and washer for after (suction) end of pump body. **(436)**

3. Overhaul and assemble oil pump (Fig. 219):

(a) Thoroughly clean and inspect all parts. Remove all burrs. Chase threads and reface seat on nipples. **(WE94, WE95, WE83, WE85)**

(b) Replace washer and plug. **(436)**

(c) Replace oil connection (to spindle casing) and secure with four screws. **(41)**

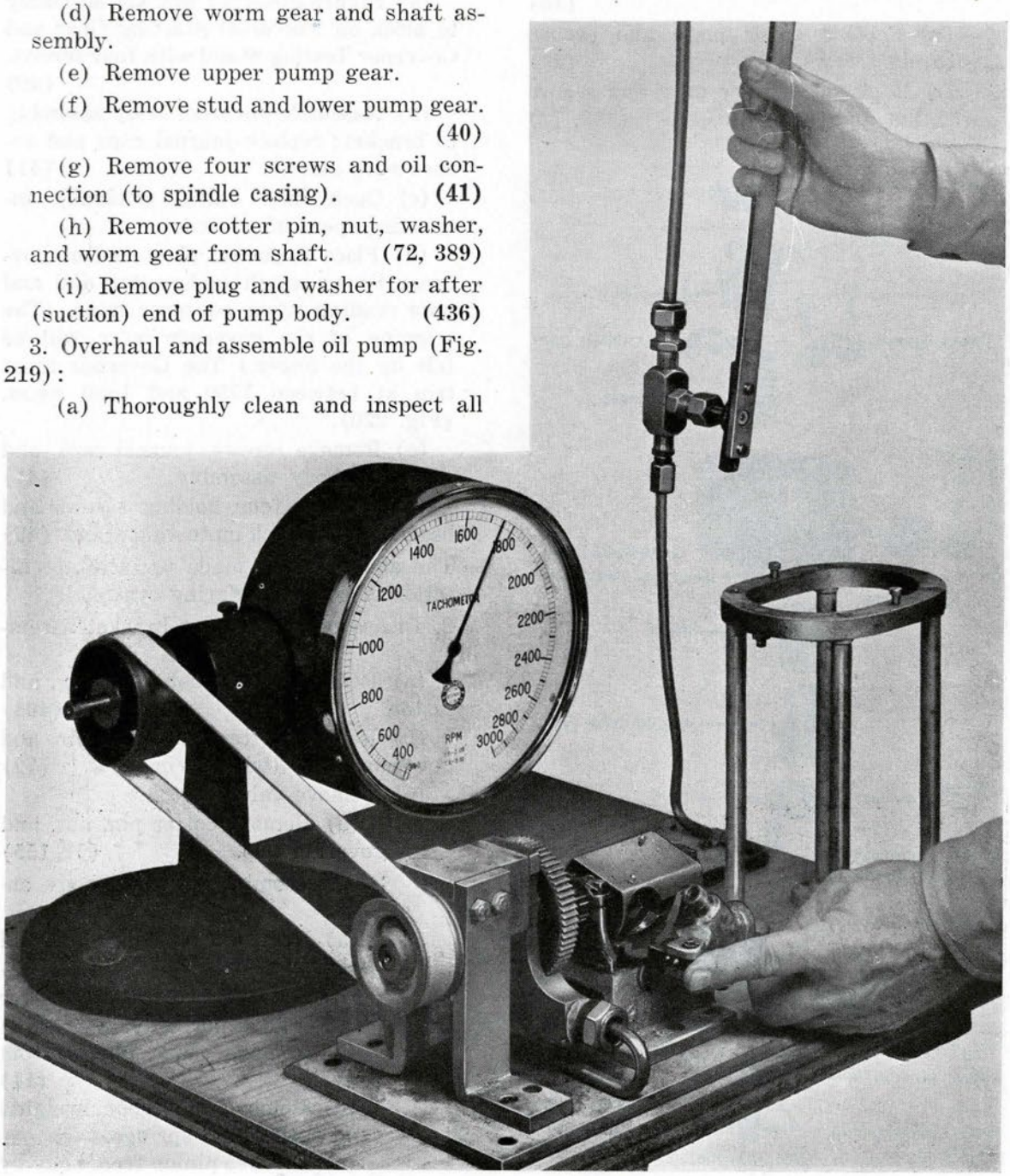

Figure 220

(d) Replace worm gear on shaft and secure with washer, nut, and cotter pin. (389, 72)

(e) Insert worm gear and shaft assembly into bearing in body.

(f) Replace upper pump gear.

(g) Replace lower pump gear and stud. (40)

(h) Replace cover plate and secure with six screws. (41)

(i) Replace governor gear and secure with nut and cotter pin. (389, 72)

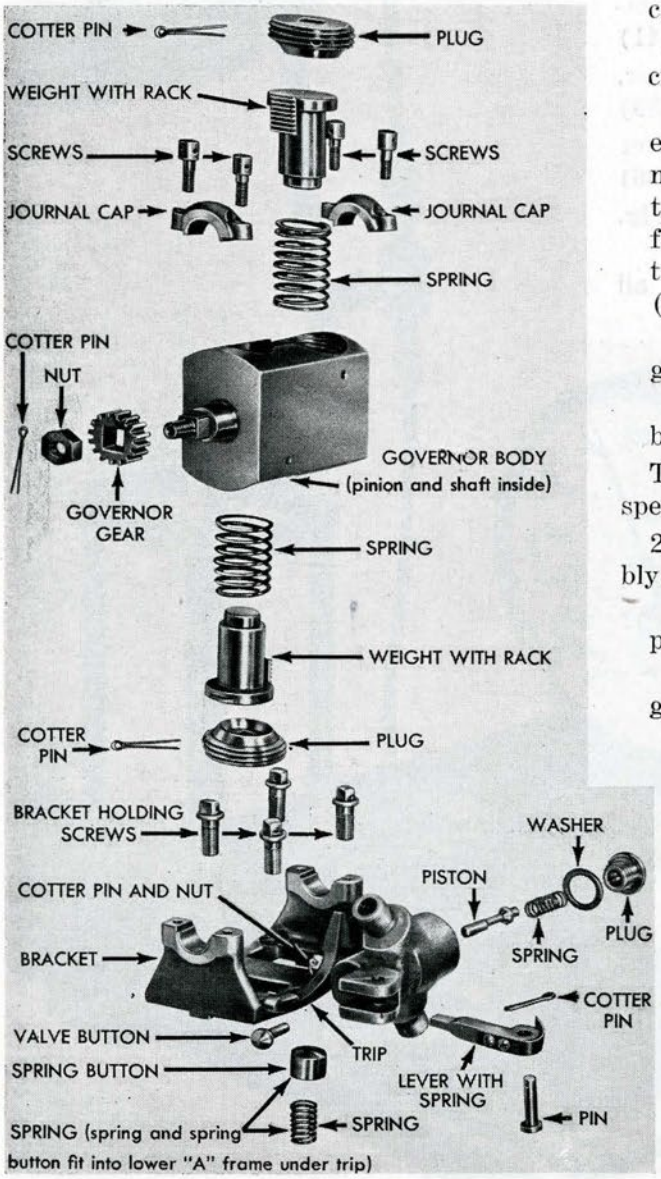

Figure 221

4. Test assembled oil pump. (See step 1.)

For installation of oil pump on main engine, see step M.

T. Governor and Governor Bracket

1. Test governor and bracket assembled:

(a) Secure governor bracket assembly to block on Universal Starting Gear and Governor Testing Stand with four screws. (49)

(b) Assemble governor body assembly to bracket; replace journal caps and secure with screws. (41)

(c) Open inlet valve, gradually increasing speed of governor.

(d) Place finger on pivot end of governor lever; watch tachometer dial and note reading when governor trips. (The tripping of the governor lever will be felt by the finger.) The Governor must trip at between 1750 and 1800 r.p.m. (Fig. 220).

(e) Remove screws, journal caps, and governor body assembly. (41)

(f) Remove four holding screws and bracket from block on testing stand. (49)

The above test is made to facilitate inspection of condition during overhaul.

2. Disassemble governor bracket assembly:

(a) Remove plug, washer, spring, and piston. (408)

(b) Remove cotter pin, hinge pin, and governor lever (with spring). (72)

(c) Remove valve button.

(d) Remove cotter pin, nut, and governor trip. (72, 155)

3. Disassemble governor body assembly:

(a) Remove cotter pin, nut, and governor gear. (72, 161)

(b) Remove two cotter pins for plugs in governor body. (72)

(c) Remove two plugs from body. (11)

(d) Remove governor weights (and racks) and springs.

(e) Remove pinion from body by driving out with drift. (166)

Note: The above step should be performed only if pinion is damaged.

4. Overhaul, assemble, and test governor bracket assembly (Fig. 221):

(a) Thoroughly clean and inspect all parts and apply oil (C).

(b) Replace governor trip and secure with nut and cotter pin. **(155, 72)**

(c) Replace piston, spring, washer, and plug. **(408)**

(d) Replace governor lever (with spring) and secure with hinge pin and cotter pin. **(72)**

(e) Replace valve button.

(f) Place governor lever against first step of governor trip.

(g) Clamp governor bracket in vise and connect low-pressure (about 600 p.s.i.) air line to "inlet" nipple on bracket. **(141A)**

(h) Turn on air; operate trip to seat piston; place can of water under "outlet" nipple on bracket and test for leaks. If a leak is observed, it will be necessary to lap piston to its seat.

(i) After test has been made, turn off air, disconnect pipe from bracket, and remove bracket from vise. **(141A)**

5. Overhaul and assemble governor body assembly (Fig. 221):

(a) Thoroughly clean and inspect all parts.

(b) If previously removed, replace pinion and shaft in body.

(c) Oil (D) and replace springs.

(d) Oil (C) and replace governor weights (and racks), using guide bushings for guiding the weights in the body so that the first tooth of each rack will mesh with the pinion, thereby equalizing the weights. **(WE39)**

(e) Replace plugs in body and screw down to line up with cotter pin holes. **(11)**

(f) Replace and clinch cotter pins. **(72)**

(g) Oil (C) and replace governor gear, nut, and cotter pin. **(161, 72)**

6. Test governor and bracket assembled. (See step 1).

For installation of governor bracket and governor body assembly on main engine, see step N.

Chapter 8—Section 7

STARTING GEAR

A. Test Prior to Disassembly

1. Mount starting gear in Universal Starting Gear and Governor Testing Stand and secure with screws. (41)

2. Turn index spindle past the "click" to seat starting piston. (227-227A)

3. With feeler gage, measure clearance between end of starting piston and piston

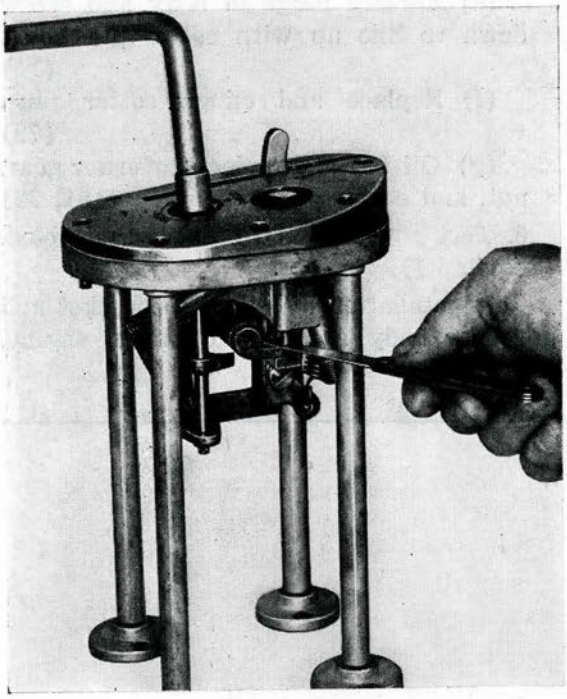

Figure 222

lever. (See Fig. 222.) This clearance should be 0.010-inch. If not, remove stock from end of starting piston until this clearance is obtained. (WE2A)

Note: Do not exceed clearance of 0.010-inch, as too much clearance may result in insufficient lift of the starting piston upon firing.

4. Put two drops of oil (C) in inlet nipple of starting gear, using syringe; connect high-pressure air line (2800 p.s.i.) to inlet nipple; make certain that starting piston is seated; turn on high-pressure air and test starting piston for leaks by holding a can of water under the outlet nipple of starting gear (Fig. 223). (141A, 227-227A)

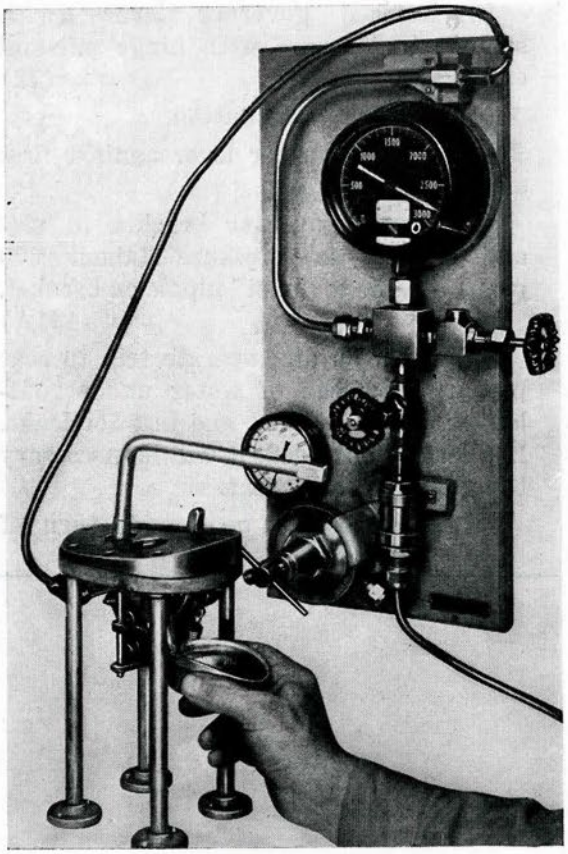

Figure 223

5. With air still on, test for leaks around plug in starting piston body, using oil (C).

6. Blank off outlet nipple; throw starting lever back; and test for leaks around lower end of starting piston. If leaks appear to be excessive, it will be necessary to lap in a new piston. (141A)

7. Seat starting piston; close high-pressure air valve; open bleeder valve on test set; remove blank and air line from nipples; and remove starting gear from test stand. (227-227A, 141A, 41)

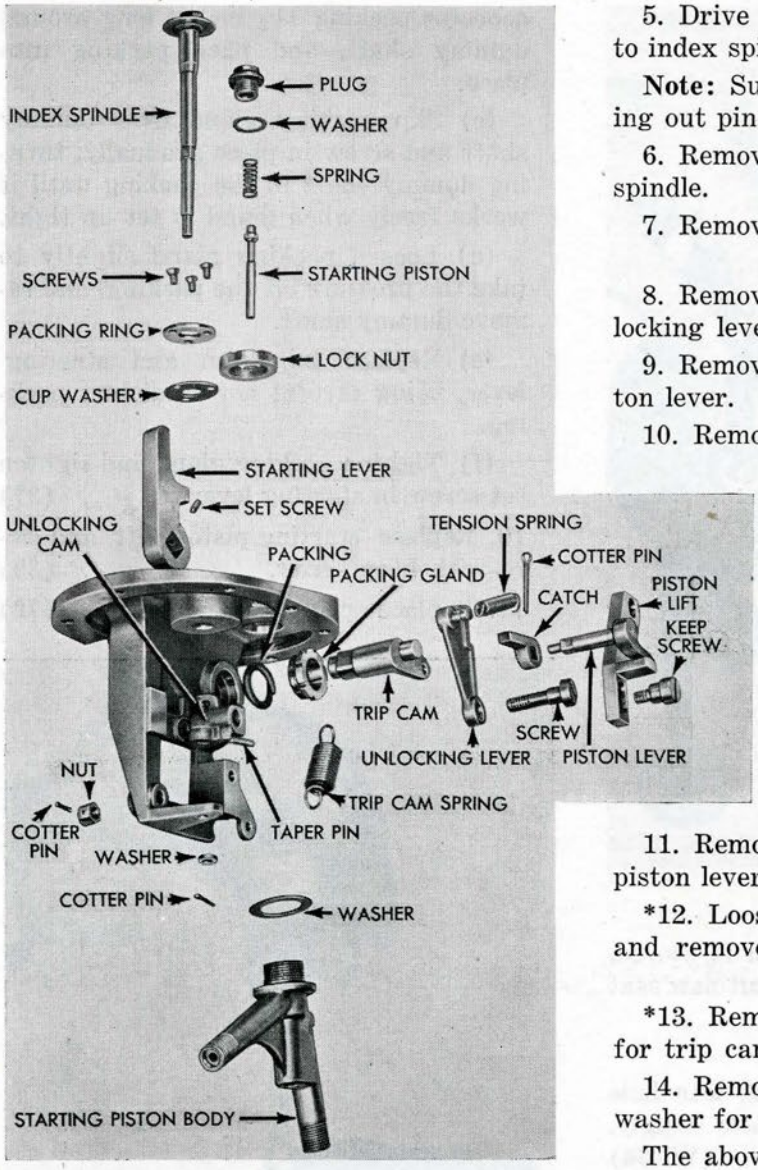

Figure 224

The above test is made to facilitate inspection of condition during overhaul.

B. Disassemble Starting Gear

1. Remove plug and washer from starting-piston body. **(12)**

2. Remove spring and starting piston.

*3. Remove lock nut, washer, and starting-piston body. **(432)**

4. Remove cotter pin and washer from lower end of index spindle. **(72)**

5. Drive out pin securing unlocking cam to index spindle. **(166)**

Note: Support index spindle when driving out pin.

6. Remove unlocking cam and index spindle.

7. Remove spring from unlocking lever. **(72)**

8. Remove cotter pin, nut, screw, and unlocking lever. **(72, 48, 41)**

9. Remove cotter pin and catch from piston lever. **(72)**

10. Remove spring from trip cam. **(72)**

11. Remove keep screw, piston lift, and piston lever. **(39)**

*12. Loosen set screw in starting lever, and remove trip cam and starting lever. **(37)**

*13. Remove packing gland and packing for trip cam. **(482)**

14. Remove screws, packing ring and cup washer for index spindle. **(37)**

The above completes the disassembly of the starting gear.

C. Overhaul, Assemble, and Test Starting Gear (Fig. 224)

1. Thoroughly clean and inspect all parts. Remove all burrs.

*2. Chase threads and reseat seats on nipples. **(WE95, WE85)**

*3. Reseat bevel seat in body for starting piston. **(WE75)**

*4. Reseat flat seat in body for starting piston. **(WE76)**

*5. Lap hole in body for starting piston (Fig. 225). **(WE56)**

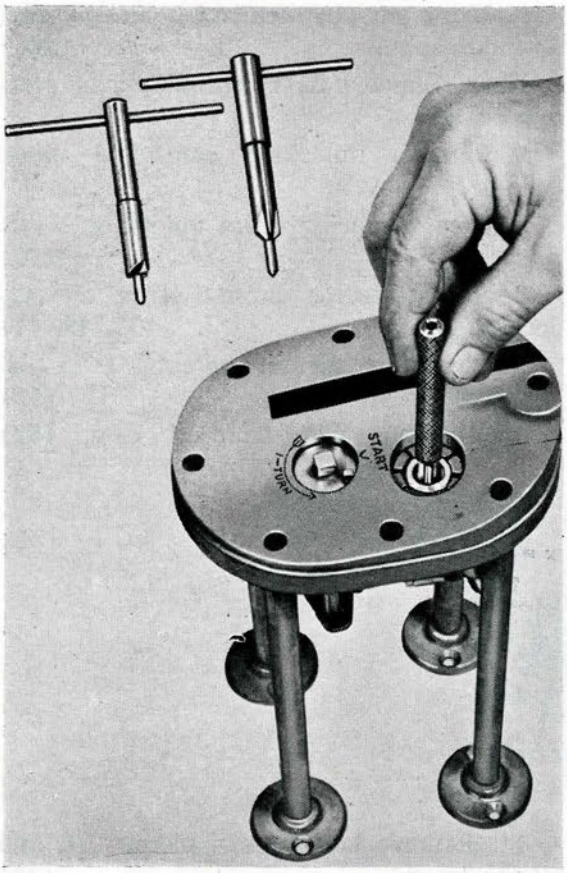

Figure 225

*6. If seat of starting piston is scored, place piston in bench lathe and cut new seat (45-degree angle).

*7. Fit starting piston:

(a) Insert male lap, WE56, into hole in body and adjust to fit hole snugly. **(WE56)**

(b) Size female lap, WE57, to fit male lap WE56 (Fig. 226). **(WE57, WE56)**

(c) Lap piston in female lap (Fig. 227). **(WE57)**

8. Grind starting piston to its seat in body, using light grinding compound. Wash parts thoroughly and lap with oil (C). (Fig. 228). **(41)**

*9. Repack stuffing box for trip cam as follows:

(a) Insert into stuffing box a piece of stock (dummy shaft) having the same diameter as the shaft of the trip cam.

(b) Wind a piece of 3/32-inch-diameter asbestos packing 7½ inches long around dummy shaft, and push packing into place.

(c) Slip packing gland over dummy shaft and screw in place gradually, turning dummy shaft in the packing until it works freely when gland is set up tight.

(d) Loosen packing gland slightly to take the pressure off the packing, and remove dummy shaft.

(e) Replace trip cam and starting lever, being careful not to distort packing.

(f) Tighten packing gland and tighten set screw in starting lever. **(37)**

10. Replace starting-piston lift and secure with keep screw. **(39)**

11. Replace spring for trip cam. **(72)**

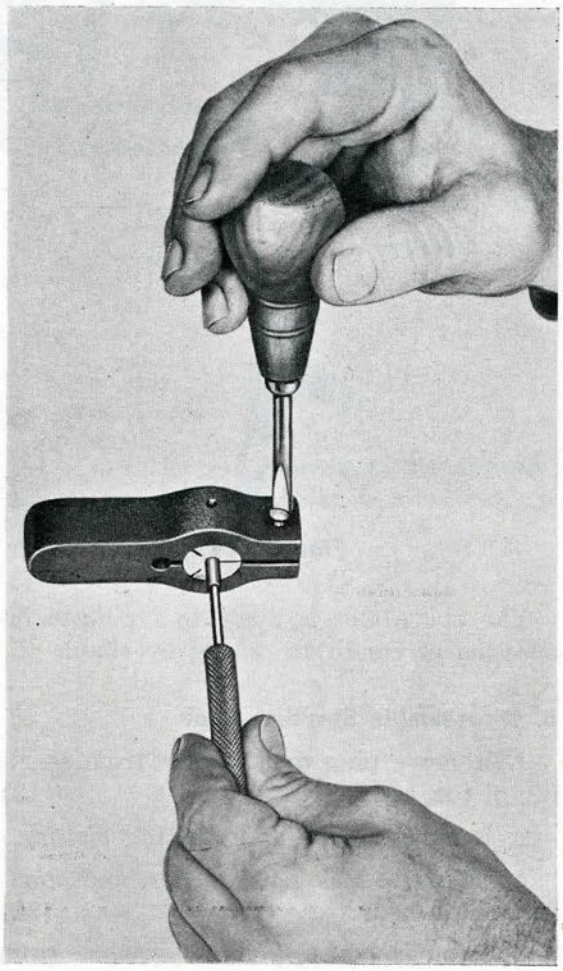

Figure 226

12. Replace starting-piston lever and secure with cotter pin. (72)

13. If removed, secure unlocking-lever spring to starting-gear body. (72)

14. Replace unlocking lever and secure with screw, nut, and cotter pin. (41, 48, 72)



Figure 227

15. Secure spring into unlocking lever. (72)

16. Renew cup washer for index spindle; place packing ring on cup washer and secure with screws. (37)

17. Replace index spindle through cam and through lower bearing in body. (227-227A)

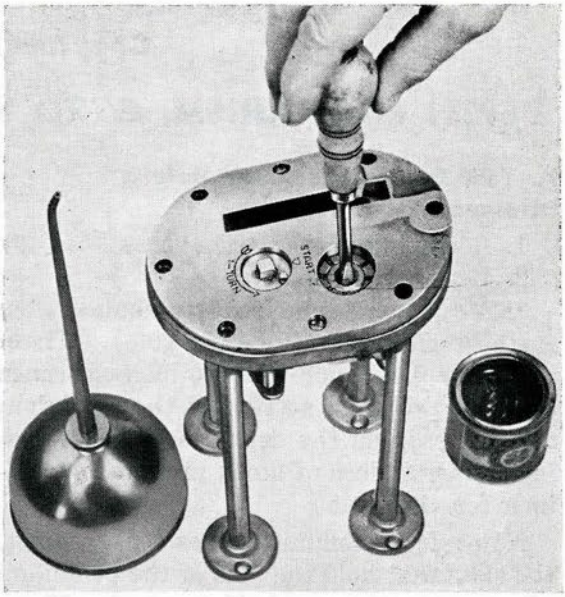

Figure 228

18. Line up hole in cam with hole in index spindle, and secure cam to spindle with taper pin. (166)

Note: Support index spindle while driving taper pin.

19. Replace washer and cotter pin on lower end of index spindle.

*20. Replace starting piston body and washer, and secure with lock nut. (432)

21. Replace starting piston, spring, washer, and plug. (12)

22. Test assembled starting gear. (For procedure, see step A, above.)

The above completes the overhaul, assembly, and test of the starting gear.

Chapter 8—Section 8

DEPTH MECHANISM, GYRO MECHANISM, AND GYROSCOPE

A. Test Depth Mechanism Before Disassembly

1. Remove transportation screw. (49)
2. Level mechanism.
3. Move pendulum hard up against stop farthest from pot (forward stop). There should be 0.494-inch to 0.500-inch clearance between the after section of the pendulum and the stop on the depth mechanism casing. (Use a piece of stock ground to 0.494-inch for this test.)

Note: If pendulum touches the gyro pot, the slots that hold the pins of the pendulum after section are probably spread. These slots may be closed about the pins by light taps with a small hammer. Should the after section still not clear the pot, the after section should be ground to clear.

4. Move pendulum hard up against the forward and after stops. There should be clearance between the sides of the knife edges and the knife-edge bearings in both positions.
5. Replace transportation screw and check pendulum stop clearances. They should be 0.247-inch to 0.250-inch. Remove transportation screw. (49)

B. Disassemble Depth Mechanism

1. Remove air chamber:
   (a) Remove plug and washer from air chamber. (11)
   (b) Remove holding nuts. (48)
   (c) Install lifting tool and remove air chamber. (409)
2. Remove diaphragm and diaphragm ring:
   (a) Remove cotter pin from diaphragm nut. (72)
   (b) Hold diaphragm plate with Tool No. 461 and unscrew diaphragm nut. (461, 410)
   (c) Remove diaphragm plate. (Pry off with screw driver.)
   (d) Remove diaphragm.
   (e) Swing pendulum full throw in both directions and measure clearance between free end of diaphragm lever and its stop for both positions of pendulum (Fig. 229). This clearance should be 0.015-inch to 0.020-inch. If clearance in either position is not correct, make necessary adjustment with linkage-adjusting screw on pendulum. (WE2A)

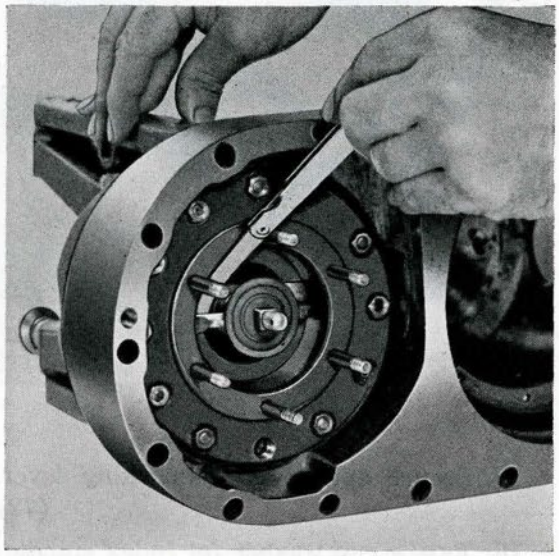

Figure 229

   (f) Remove holding nuts, diaphragm ring, and gasket. (48)
3. Remove pendulum lever and diaphragm-lever shaft:
   (a) Remove cotter pin and pin for pendulum link to pendulum lever. (72)
   (b) Remove keep screw for diaphragm-lever shaft. (41)
   (c) Remove pendulum lever and diaphragm-lever shaft assembled.

Note: Insert a soft brass rod in back of pendulum lever close to its hub, and tap out the shaft. Great care must be exercised not to bend this shaft when removing it.

4. Remove depth-spring assembly:
   (a) Turn depth-spring adjusting spindle clockwise until threads on adjust-

ing screw disengage threads in upper depth-spring socket. **(180)**

(b) Remove depth spring with sockets and diaphragm-lever assembled.

*(c) Remove cotter pin, washer, pin, and diaphragm-lever from lower depth-spring socket. **(72)**

5. Remove pendulum:

(a) Remove two screws and after section of pendulum. **(40)**

(b) Remove depth-spring adjusting spindle:

(1) Remove cotter pin from bottom of spindle. **(72)**

(2) Hold spindle with tool in spring-adjusting head and unscrew nut on the lower end. **(180, 155)**

(3) Lift spindle out of its bearing from the top, removing gear on the bottom end.

(c) Remove holding screws from knife-edge retainer plates and remove retainer plates. **(41)**

Note: Retainer plates should be marked before removal and replaced on the side from which removed.

(d) Remove cotter pins and taper pins for knife edges. Start taper pins with a small brass hammer.

(e) Remove knife edges by tapping from outer ends toward center.

(f) Remove forward section of pendulum.

6. Remove adjusting screw and idler gear:

(a) Remove depth-spring adjusting screw (with ring seal) and idler gear.

*(b) Remove ring seal from adjusting screw.

*7. Remove pendulum-adjusting linkage:

(a) Remove cotter pin and washer from pivot for linkage-adjusting arm. **(72)**

(b) Remove linkage-adjusting arm with pendulum link.

(c) Remove pin in nut for linkage-adjusting screw. **(166)**

(d) Remove nut from linkage-adjusting screw.

(e) Back out clamp screw for linkage-adjusting screw. **(41)**

(f) Remove linkage-adjusting screw. **(41)**

8. Remove depth-mechanism casing:

(a) Remove ten holding nuts. **(48)**

(b) Remove depth-mechanism casing and gasket from base.

The above completes the disassembly of the depth mechanism.

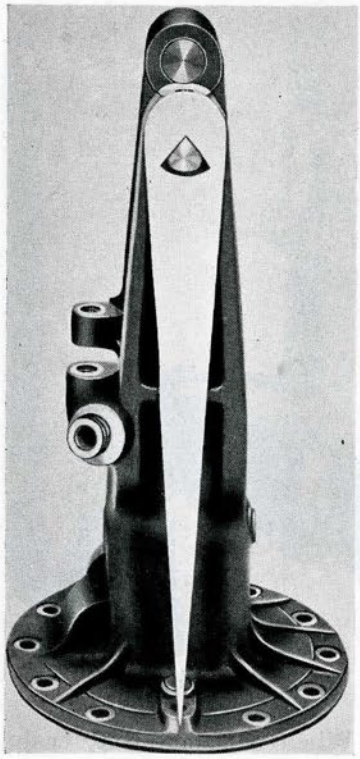

Figure 230

OVERHAUL, ASSEMBLY, AND TEST

C. Depth Mechanism

1. Thoroughly clean and inspect parts, paying particular attention to seats, bearing surfaces, gaskets, threads, etc.

2. Check alignment of arms on depth-mechanism casing:

(a) Install and temporarily secure knife edges in arms of casing.

(b) Extend a line through the center of depth-mechanism casing and stud holes directly under knife edges. **If not already done,** scribe marks on edge of casing on this line.

(c) Place depth-mechanism casing on a leveled surface plate.

(d) Place pointer gage on each knife edge and note if pointer comes to rest on scribe marks (Fig. 230); if not, arms are out of alignment and must be sprung into proper alignment. **(WE186)**

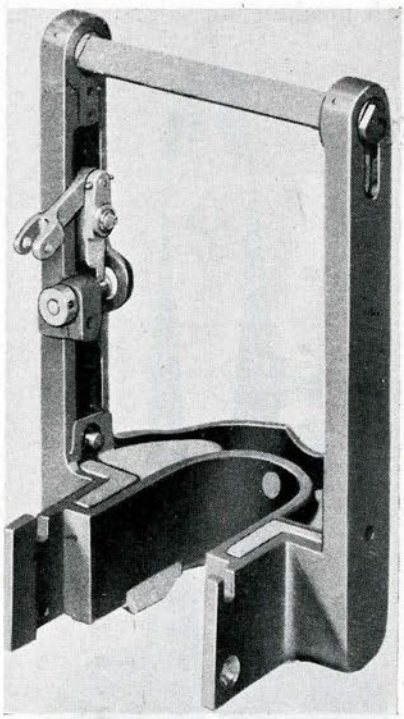

Figure 231

(e) When satisfied that casing arms are in alignment, remove casing from surface plate, and remove pointer gage and knife edges.

3. Replace depth-mechanism casing:

(a) Clean and inspect mechanism base and depth-mechanism casing, including seats and bearing surfaces, for burrs. Inspect studs for tightness; renew where necessary. Inspect all screw holes for burrs or damaged threads. If necessary, remove burrs with a scraper, and clear tapped holes with a tap. Run a finger die over studs with damaged threads. **(490)**

(b) Place a new gasket over studs on seat.

(c) Install casing on mechanism base and secure with ten holding nuts, tightening up evenly. (48)

4. Check fit of diaphragm-lever shaft in its bearing in depth-mechanism casing:

Note: Diaphragm-lever shaft must be capable of rotating freely in its bearing.

(a) Remove ring seal from diaphragm-lever shaft.

(b) Replace diaphragm-lever shaft and pendulum lever in bearing.

(c) Replace gasket and diaphragm ring. Secure with nuts. (48)

(d) Replace air chamber and secure with nuts. (48)

(e) Stand mechanism on its forward end; move pendulum lever up as far as it will go and note if it will drop of its own weight. If not, remove air chamber, diaphragm ring, and casing, and inspect seat of casing, base, and diaphragm ring for burrs which may cause the warping of the diaphragm-lever shaft bearing with nuts set up tight. Re-assemble and repeat test. (48)

(f) After satisfactory test has been made, remove air chamber, diaphragm ring, gasket, diaphragm-lever shaft, and pendulum lever. (48)

*5 Replace pendulum-adjusting linkage:

(a) Replace linkage-adjusting screw on pendulum. (41)

(b) Tighten clamp screw for linkage-adjusting screw. (41)

(c) Replace nut for linkage-adjusting screw and secure with pin. **(166)**

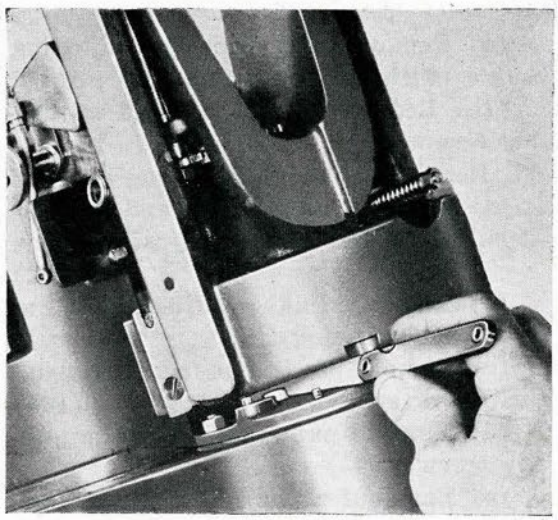

Figure 232

(d) Replace linkage-adjusting arm with pendulum link.

(e) Replace washer and cotter pin on pivot for linkage-adjusting arm. (72)

6. Replace forward section of pendulum:

(a) Check pendulum arms for alignment (Fig. 231). (WE184)

(b) Place pendulum around depth-mechanism casing, lift arms into alignment with holes in casing arms, and install knife-edge bearings with holes for taper pins in line.

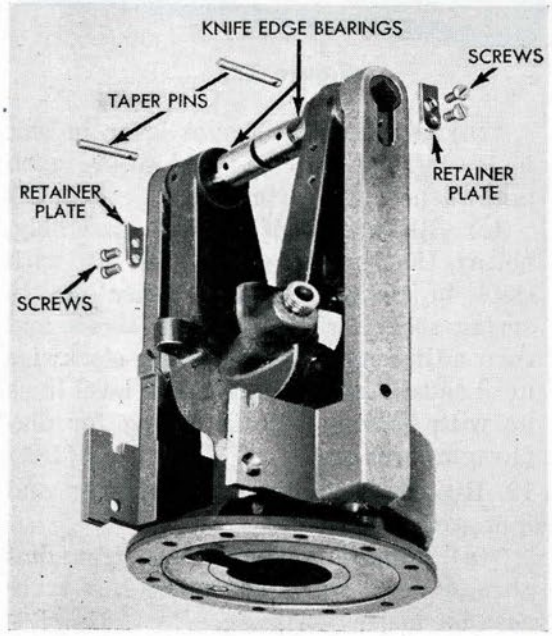

Figure 233

Note: It is important that knife edges are sharp and free of burrs.

(c) Check clearance between guides and mating rollers with mechanism inclined 30 degrees both ways from the vertical. In these positions, the guides should not contact their mating rollers (Fig. 232). (WE2A)

Note: If the above clearance is not obtained, it will be necessary to remove pendulum and stone guides.

(d) Replace taper pins for knife edges and secure with cotter pins. (72)

(e) Straighten if necessary; replace knife-edge bearing retainer plates and secure with screws (Fig. 233). (41)

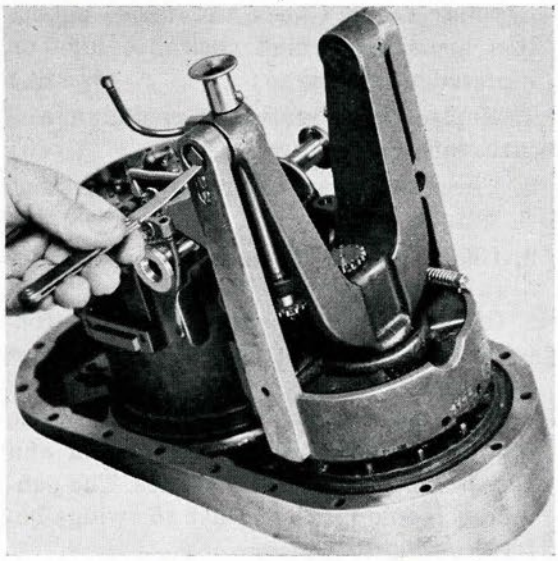

Figure 234

(f) Check clearance between retainer plates and knife edges (Fig. 234). This clearance should be not less than 0.005-inch nor more than 0.007-inch. If clearance is less than 0.005-inch, remove retainer plates and stone upper surfaces. (WE2A)

(g) With mechanism level, measure clearance between pendulum arm and "Y" arms of casing (Fig. 235). This clearance should be at least 0.010-inch. If sufficient clearance is not obtained, bind-

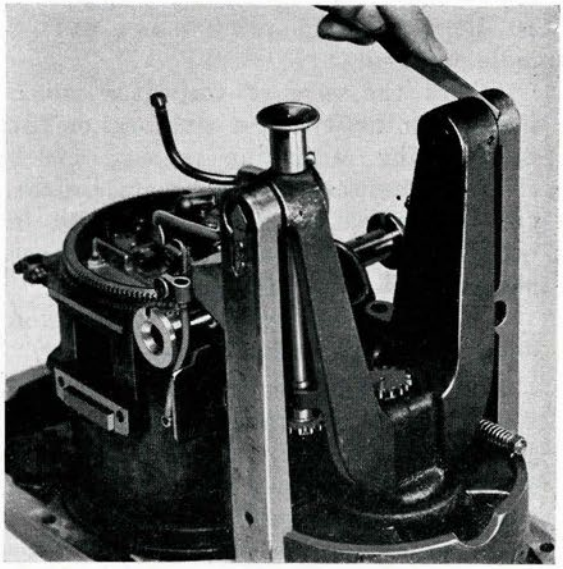

Figure 235

ing may occur. Check "Y" arms, pendulum arms, and small clearance lugs on knife-edge bearings. **(WE2A)**

7. Replace after section of pendulum and secure with two screws. **(40)**

8. Check pendulum clearances. (See steps A-2, 3, 4, and 5).

9. Check swings of pendulum:

(a) Level mechanism.

(b) Place a one-pound weight in forward portion of pendulum (to balance pendulum).

(c) Hold pendulum all the way in the forward position. Release pendulum and note number of swings it makes. The pendulum should make at least 16 swings before coming to rest.

Note: If pendulum does not make the required number of swings, check arms of casing for alignment (see step D-2),

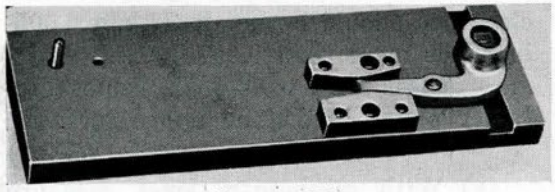

Figure 236

and check knife edges and knife edge bushings for burrs.

(d) Remove one-pound weight from pendulum.

10. Replace depth-spring adjusting spindle and gears:

(a) In the case of torpedoes which have a synthetic-rubber ring seal on the depth-spring adjusting screw, check clearance between bearing surface diameter on adjusting screw and hole in depth-mechanism casing. This clearance should be at least 0.001-inch.

*(b) Roll ring seal into groove on depth-spring adjusting screw.

Note: In order to prevent damage to seal when rolling it over threads on adjusting screw, wrap a piece of paper around threaded portion of screw and roll ring seal over paper into groove.

(c) Replace adjusting screw and idler gear.

(d) Replace adjusting spindle and gear; and secure gear to bottom of spindle with nut and cotter pin. **(180, 155, 72)**

11. Replace depth spring, diaphragm lever, and socket assembly:

*(a) Inspect diaphragm lever for trueness, using inspection plate (Fig. 236). **(WE175)**

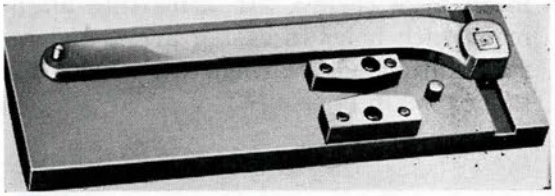

Figure 237

*(b) Replace diaphragm lever in slot in lower spring socket; and secure with pin, washer, and cotter pin. **(72)**

(c) Replace depth-spring assembly, noting that spring guides line up with slots in casing; engage upper depth-spring socket with adjusting screw and turn adjusting spindle counter-clockwise until square hole in diaphragm level lines up with bearing hole in casing for diaphragm-lever shaft. **(180)**

12. Replace pendulum (long) lever and diaphragm-lever shaft:

*(a) Remove pendulum lever from diaphragm-lever shaft and check for trueness on inspection plate (Fig. 237). Replace lever on shaft and secure with taper pin. **(166, WE175)**

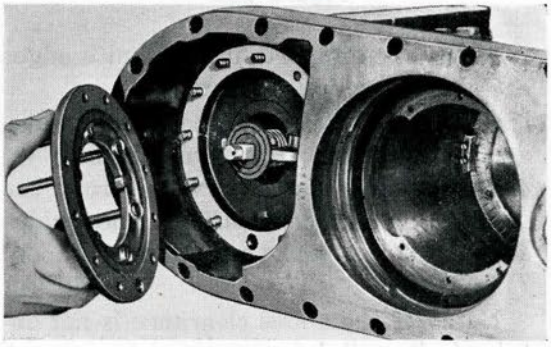

Figure 238

(b) Roll new ring seal over end of shaft into groove.

(c) Replace pendulum lever and dia-

phragm-lever shaft, assembled, in bearing, guiding shaft through hole in diaphragm-lever; secure shaft with keep screw. **(41)**

13. Connect linkage of pendulum to upper end of pendulum lever:

(a) Replace transportation pin. **(49)**

(b) With pendulum-linkage adjusting screw midway between its stops, turn depth-spring adjusting spindle until the hole in the pendulum link lines up with the hole in the pendulum lever. **(180)**

(c) Secure pendulum lever to link with pin and cotter pin. **(72)**

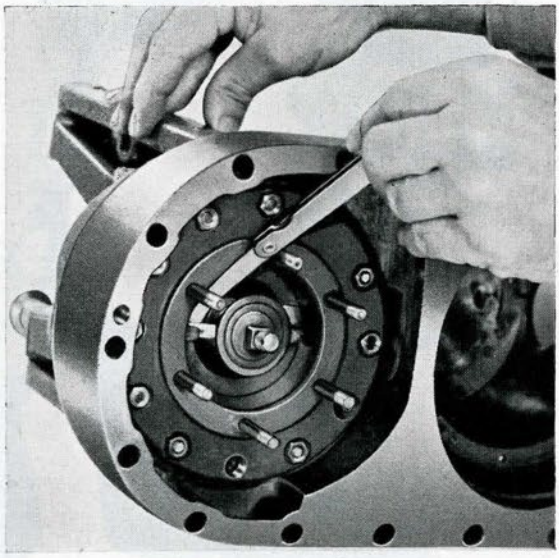

Figure 239

14. Check swings of pendulum. (See step 9, above.) The pendulum should make at least nine swings before coming to rest.

15. Replace diaphragm ring:

(a) Replace gasket for diaphragm ring over studs in mechanism base.

(b) Replace diaphragm ring and secure with ten nuts (Fig. 238). **(48)**

16. Check diaphragm lever clearances:

(a) Lay mechanism base on right side.

(b) Hold pendulum all the way in its after position and measure clearance between diaphragm lever and bottom of depth-mechanism casing. This clearance should be 0.015-inch to 0.020-inch. **(WE2A)**

(c) Hold pendulum all the way in its forward position and measure clearance between diaphragm lever and ring. This clearance should also be 0.015-inch to 0.020-inch. (Fig. 239) **(WE2A)**

Note: If clearance in either position is not at least 0.015-inch, loosen clamp screw and turn pendulum-linkage adjusting screw to equalize diaphragm-lever clearances. If the clearances are not at least 0.015-inch, even though equalized, it will be necessary to remove stock from both sides of the diaphragm lever.

17. Replace diaphragm:

(a) Place a new diaphragm on diaphragm ring, with bulged side facing out.

(b) Replace diaphragm plate, nut, and cotter pin. **(461, 410, 72)**

18. Replace air chamber:

(a) Replace air chamber over diaphragm and secure with six nuts. **(48)**

(b) Replace washer and access plug. **(11)**

19. Measure torque required to turn depth-spring adjusting spindle:

(a) Place mechanism right-side-up on base.

(b) Insert Tool No. 180 (modified by an extension on the handle to give a one-foot moment arm) into socket head on depth-spring adjusting spindle. **(180)**

(c) Place tip of push balance on end of modified Tool No. 180, and note force required to start spindle turning. The push-balance reading should not exceed 2½ pounds. **(180, 98)**

Note: If push-balance reading exceeds 2½ pounds, locate cause and remedy.

(d) Remove modified Tool No. 180 from socket head.

20. Install transportation pin. **(49)**

The above completes the overhaul and assembly of the depth mechanism, except for the assembly of the bracket for pallet driving gear and the assembly of the tension rod and valve-lever assembly. These units must be assembled after the assembly of some of the gyro mechanism parts. (See steps E-14 and E-29.) Step F gives the test for the assembled depth mechanism.

D. Test Assembled Depth Mechanism

1. Ascertain that transportation screw is installed in mechanism. Install mechanism and gasket in Depth Mechanism Test Stand and secure with screws and expansion plugs. **(456)**

2. Install pressure-chamber cover with proper side out, so that the access holes will align properly with the atmospheric-chamber plug and the transportation screw. Secure cover in place. **(402)**

3. Rotate pressure chamber to bring depth mechanism right-side-up.

4. Install depth engine on mechanism and connect valve connecting rod to the depth-linkage system. **(49, 205A-246)**

Note: The depth engine must be in proper working order. See step E.

5. Connect air line (450 p.s.i.) to the depth engine and turn on air. **(141A)**

6. Check alignment of scribe mark on depth-engine valve connecting rod with scribe mark on valve stop. If the marks do not line up, loosen clamp screw, turn valve connecting rod to obtain alignment, and tighten clamp screw. **(205A-246)**

Note: After the valve connecting rod has been turned, make certain that hole in knurled portion of connecting rod is horizontal. When this hole is horizontal, the small pivot pin, which secures the connecting rod to the valve, will be horizontal. If the pivot pin is not horizontal, the connecting rod will not have a proper pivoting movement with respect to the valve; also, if the pivot pin becomes loose, it may drop down and prevent proper valve action.

7. Turn off air.

8. Remove two access plugs from pressure-chamber cover. **(410)**

9. Remove transportation screw. **(49)**

10. The scribe marks on the depth-engine valve connecting rod and the valve stop should not move out of alignment when the transportation screw is removed. If a movement of the valve connecting rod is noticed, the test stand should be checked to see if it is out of level.

11. Install replacement screw. **(49)**

12. Remove atmospheric-chamber plug and install screw hook. **(11)**

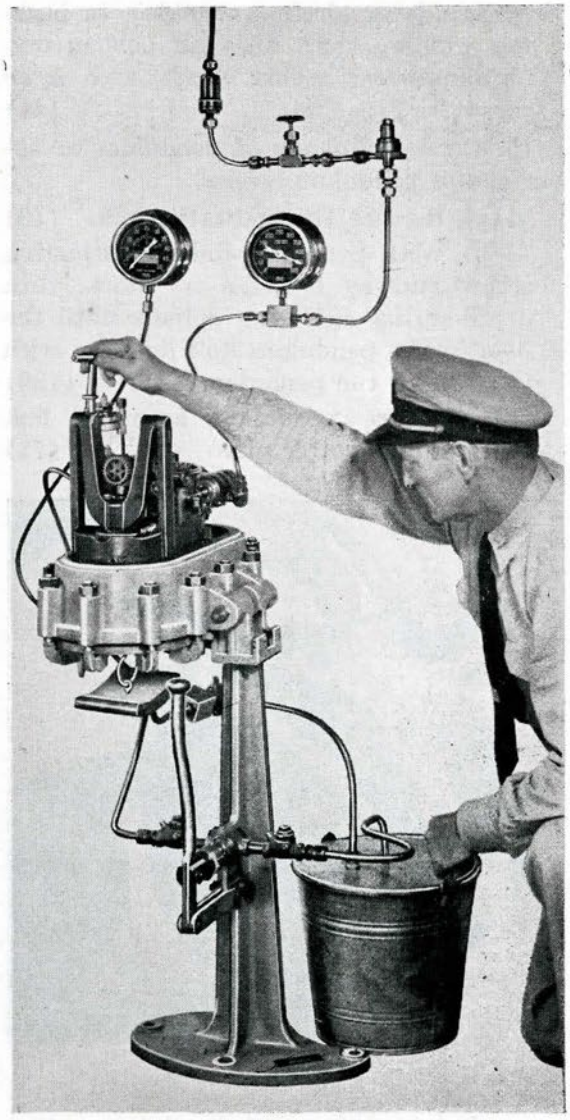

Figure 240

13. Place a 10-pound weight on hook. **(411A)**

14. Turn on air to depth engine.

15. Rotate depth-spring adjusting spindle until depth-engine scribe marks are again in alignment. Move pendulum back and forth several times and note that scribe marks are in line when pendulum comes to rest (Fig. 240). **(180)**

16. Remove weight and screw hook.

17. Replace atmospheric-chamber plug and washer. **(11)**

18. Replace the two access plugs and washers in the pressure-chamber cover. **(410)**

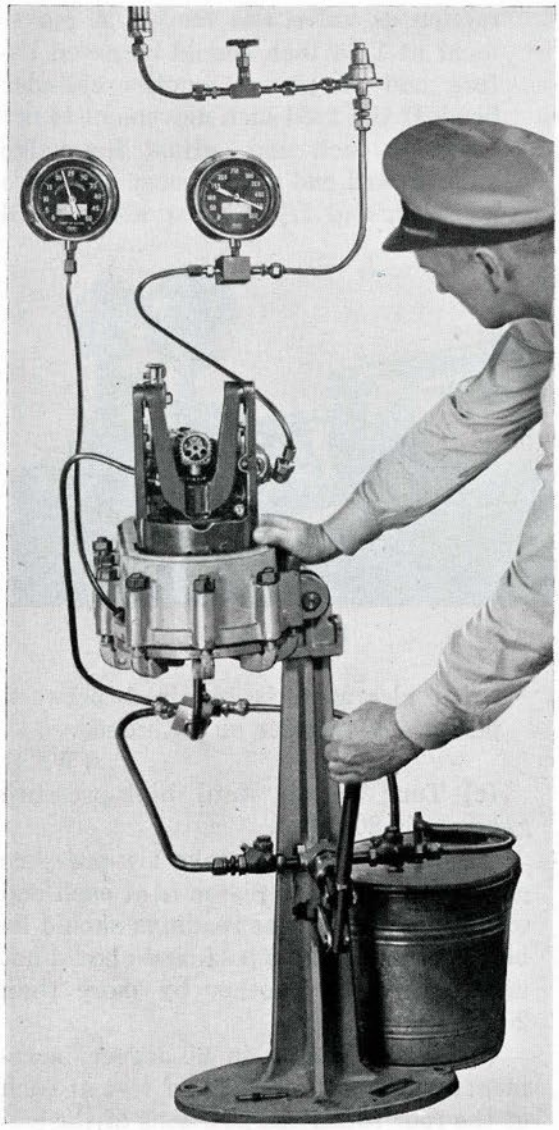

Figure 241

19. Connect pipe from "T" block to nipple in pressure-chamber cover. **(229)**

20. Connect pipe from "T" block to nipple on depth-mechanism casing. **(229, 144)**

21. Turn two-way valve so as to deliver water to pressure chamber and depth-mechanism casing. **(436)**

22. Pump until water comes out of gage nipple in pressure chamber. Connect "sea-water" gage pipe to this nipple. **(141A)**

23. Pump slowly, noting sea-water gage and depth-engine valve. Read gage: (1) When depth-engine valve begins to move ("Breakaway"), (2) when scribe marks come into alignment ("center"), and (3) when valve is hard up against the valve stop ("Hard Up"). These readings should be:

Hydrostatic Pressure (in Feet of Sea Water) at Various Positions of Depth Engine Valve

Breakaway	Center	Hard Up
3 to 4	9 to 10	17 to 20

24. Continue pumping until gage shows 25 feet of sea pressure (Fig. 241).

25. Look for leaks in depth-mechanism casing, around diaphragm-lever shaft, and around depth-spring adjusting screw.

26. Turn two-way valve so as to drain the pressure chamber slowly. Read the gage: (1) when the depth-engine valve begins to move ("Breakaway"), (2) when scribe marks come into alignment ("Center"), and (3) when valve is hard up against the valve stop ("Hard Up").

The gage readings should not lag those found in step 23 by more than one foot of pressure at "Center" and two feet of pressure at "Full Throw" positions. **(436)**

27. Repeat steps 23 through 26 three times. The gage readings should check; and the operation of the depth-engine valve should be smooth and continuous, giving no indication of jerky or sticky operation. Slight leaks, which may not be apparent during the single test, are sometimes indicated on succeeding tests. This completes the test.

28. Turn off air to depth engine.

29. Turn two-way valve to drain water from pressure chamber to bucket. **(436)**

30. Remove an access plug to drain remainder of water from pressure chamber. **(410)**

31. Disconnect pipe from pressure-chamber cover to "T" block. **(229)**

32. Disconnect pipe from depth-mechanism casing to "T" block. **(144)**

33. Rotate depth-spring adjusting spindle to relieve all tension on depth spring. **(180)**

34. Disconnect gage lead from pressure chamber. **(141A)**

35. Disconnect air pipe from depth engine and remove depth engine.
(141A, 205A-246, 49)

36. Rotate pressure chamber to bring pressure-chamber cover on top.

37. Remove pressure-chamber cover.
(402)

38. Remove mechanism from pressure chamber. **(456)**

E. Depth Engine

1. Test prior to disassembly:

(a) Mount depth-engine on Leakage Test Stand and connect to test lead.
(49, 141A)

(b) Check centering of piston in cylinder as follows:

(1) Turn on air to 450 p.s.i. on low-pressure gage.

(2) Move valve against stop in one direction.

(3) Turn air off.

(4) Push piston by hand in same direction as valve was moved. A movement of 1/64 inch should be noted before end of piston touches cylinder head. **(WE8)**

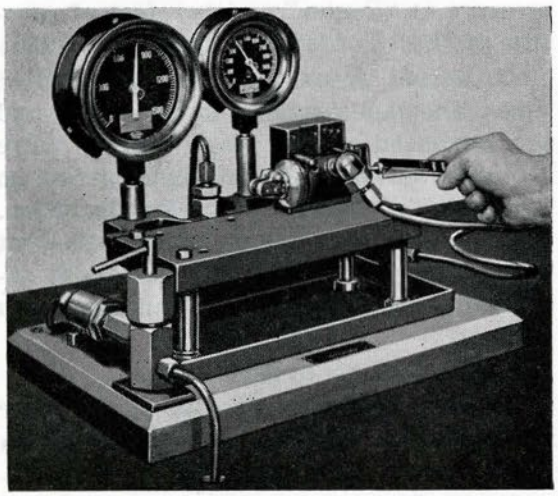

Figure 242

(5) Turn on air to 450 p.s.i. on low-pressure gage.

(6) Move valve against stop in reverse direction.

(7) Turn air off.

(8) Push piston by hand in same direction as valve was moved. A movement of 1/64 inch should be noted before end of piston touches cylinder head. If the 1/64 inch movement is not noted at each end, adjust the valve stop toward end where most clearance is noted, and try against above until

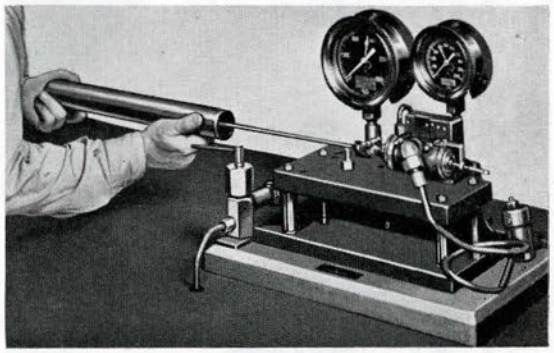

Figure 243

equal clearance is obtained between piston and cylinder on both ends.
(WE8)

(c) Turn on air until high-pressure gage reads 800 p.s.i.

(d) Move valve and take low-pressure gage readings when piston is at each end of the cylinder. These readings should lie between 400 and 650 p.s.i. and should not differ from one another by more than 20 p.s.i.

(e) Rotate piston in 90-degree increments, repeating step (d) of test at each of the four rotational positions of the piston.

Note: When rotating the piston, move it back and forth with the valve, so as not to score the cylinder.

(f) With air on engine, test sensitivity of valve, using a feather gage to move it (Fig. 242). The valve and piston should move in either direction with a force of ½-ounce or less. **(222)**

(g) Test cylinder head, inlet nipple, and piston rod packing glands for leaks, using oil (C).

Note: The piston should always be at the opposite end from that being tested for leaks, so that the end being tested will be under air pressure.

(h) Turn off air.

(i) Test tightness of packing by using a push balance to move the piston (Fig. 243). This should not read over 27 pounds. **(98)**

(j) Disconnect test lead from engine, and remove engine from test stand. **(141A, 49)**

The above test is made to facilitate inspection of condition during overhaul.

2. Disassemble engine:

(a) Clamp holding block (SG 2537) for depth-engine in vise; mount engine on block and secure. **(49)**

(b) Remove valve stop. **(41)**

(c) Remove valve stop plug and valve from piston. **(159)**

(d) Unscrew packing glands about a turn. **(169)**

(e) Remove piston fork by loosening clamp screw and wedging screw driver in clamping slot until threads on fork turn freely. Scribe position before removal and count turns. **(49, 41)**

(f) Remove cylinder head and washer. **(377)**

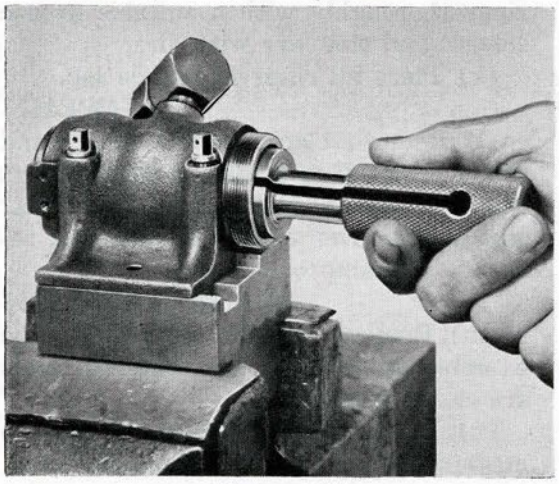

Figure 244

(g) Push piston out of cylinder and place where lapped surfaces will be protected against marring.

(h) Remove two packing glands and packing. **(169, 482)**

(i) Remove strainer-holder cap, washer, and strainer. **(402)**

(j) Immerse all parts, except packing, in grease solvent and blow dry with air.

(k) Immerse new packing in oil (D) until ready for use.

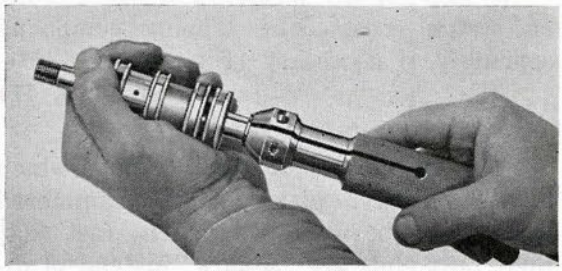

Figure 245

3. Inspect parts for wear and defects:

(a) Note if any scratches or small scores appear on inside of depth-engine cylinder.

(b) Examine piston rods for burrs or scratches. Examine piston rings for wear; piston rings should show even wear throughout their convex surfaces. There should be no tendency for rings to bind or stick in grooves; butt ends should be free, with no noticeable clearance.

(c) Observe butt clearance by inserting piston, with rings, in cylinder, noticing rings as they enter cylinder. If butt clearance is noticeable by eye, the rings are worn too much and should be replaced. **(230)**

(d) Examine valve hole for burrs or scratches, particularly around annular air grooves for valve.

(e) Examine valve for scratches and burrs.

(f) Check valve for alignment, using straight edge or surface plate.

(g) Examine strainer and strainer holder.

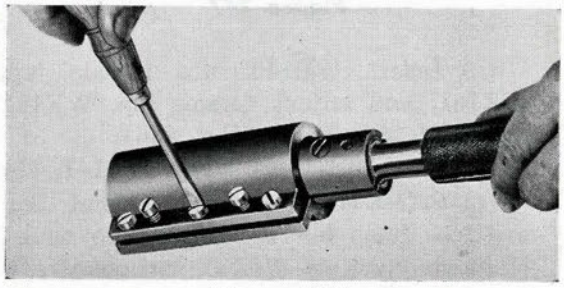

Figure 246

*4. Lap out any scratches or burrs found in depth-engine cylinder, using lapping compound only if necessary. Lap to final size, using oil (C) (Fig. 244). **(WE140, 41)**

*5. Lap out any scratches or burrs found on piston rods, using lapping compound sparingly, if necessary (Fig. 245). **(WE139, 41)**

*6. Fit new piston rings:

Note: In the case of depth engines which have hammered piston rings (hammered piston may be identified by the fact that their butt ends are "square" instead of diagonal) the piston rings should not be lapped; they must be replaced by rings which have diagonal butt ends. The procedure for fitting new rings in all depth engines is given below.

(a) Remove worn rings from piston.

(b) Adjust male lap, WE140, to fit cylinder snugly. **(WE140, 41)**

(c) Measure diameter of WE140 after adjusting to fit cylinder. **(WE6, WE140)**

(d) Adjust WE140 so that it is 0.002-inch larger in diameter than bore of cylinder. **(WE140, WE6, 41)**

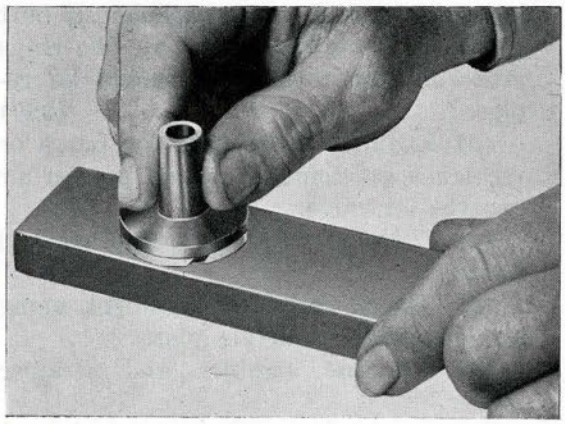

Figure 247

(e) Insert WE140 into female lap, WE141, and adjust female lap, WE141 to fit WE140 snugly (Fig. 246). **(WE140, WE141, 41)**

(f) Select new rings and see that they are free from burrs. If possible, select rings that will fit WE141 without dressing down the butt ends. **(WE141)**

Note: If necessary to remove metal on butt ends to fit rings into lap, WE141, use a small flat file, and finish by stoning. Remove burrs after filing and stoning.

(g) Measure width of rings. **(WE5)**

(h) Slip rings, one at a time, over lap holder, WE142, and rub down to a width

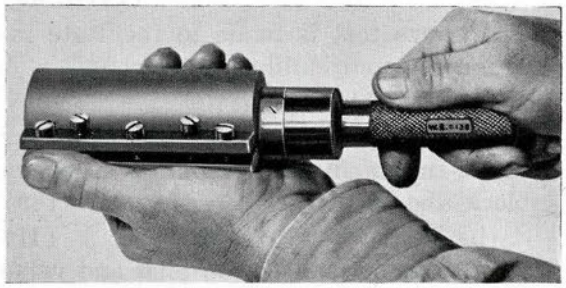

Figure 248

of 0.096-inch against a piece of No. 0 emery cloth laid on a smooth and level surface. **(WE142, WE5)**

(i) Finish lapping rings against smooth side of combination oil stone, (Fig. 247) trying rings in grooves on piston until a snug fit without binding is obtained. **(WE142)**

(j) After lapping, wash piston and rings thoroughly with a suitable grease solvent and blow dry with air.

(k) Place all rings in female lap. **(WE141)**

(l) Remove clamp bolt, washer, and sleeve on lap plug holder, WE138; insert this tool through piston rings in WE141; slip washer over end of WE138 and secure with clamp bolt. **(WE141, WE138, 144)**

(m) Remove WE138, with rings, and examine all rings to see that butt ends are closed together.

(n) Lap rings in WE141, using the medium-fine grade of compound (Fig. 248). Gradually tighten up on lap until rings are 0.001-inch larger in diameter than bore of cylinder. **(WE141, WE138, WE6, 41)**

(o) Change to fine grade of lapping compound and finish lapping rings with oil (C) until they reach the inside diameter of the cylinder. **(WE141, WE138, WE6, 41)**

Note: Remove lap-plug holder, WE138, from WE141 occasionally during lapping and note if entire outside surface of each ring contacts lap. If there is any doubt about a ring not lapping out, it is best to replace such ring before proceeding any further, as the whole set must be finished lapped together.

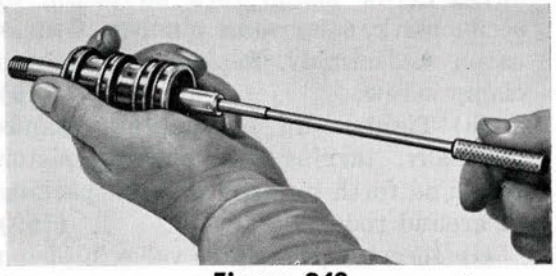

Figure 249

(p) After rings have been lapped to size of cylinder, wash clean with oil (C) and try WE138, with rings, in cylinder. If rings fit too snugly, do not attempt to force them into cylinder, but replace in WE141 and continue to lap and try again until fit is obtained.

(WE138, WE141, 230)

(q) Remove rings from WE138; wash thoroughly with grease solvent and assemble them on piston. **(WE138, 144)**

*7. Lap valve hole in piston:

(a) Adjust male lap, WE147, to size of valve hole in piston. **(WE147)**

Note: In making this adjustment, great care must be taken not to mar end of lap. Using a piece of copper stock having a 3/16-inch hole, line up end of lap in this hole and tap lap handle lightly with a small bronze hammer, trying lap in hole for valve until final adjustment is obtained.

(b) If any burrs or scratches are found in valve hole, use a small quantity of fine lapping compound, applying evenly over surface of lap. **(WE147)**

Note: In lapping, move lap with a turning and reciprocating motion over total length of hole to obtain a uniform diameter throughout its length. Do not lap more than necessary to remove burrs and scratches.

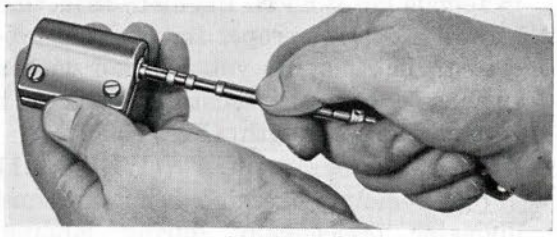

Figure 250

(c) Carefully wash lapping material off lap and out of hole with a grease solvent, and blow out carefully with low-pressure air.

(d) Lap hole with oil (C) until it shows a well polished surface (Fig. 249). **(WE147)**

(e) Wash hole and lap with grease solvent and blow dry with air.

*8. Fit new valve:

(a) Measure diameter of lap, WE147, after finish lapping hole in piston, as done in step 7-(d), above. Pick out a spare valve about 0.0025-inch larger than this diameter. **(WE147, WE5)**

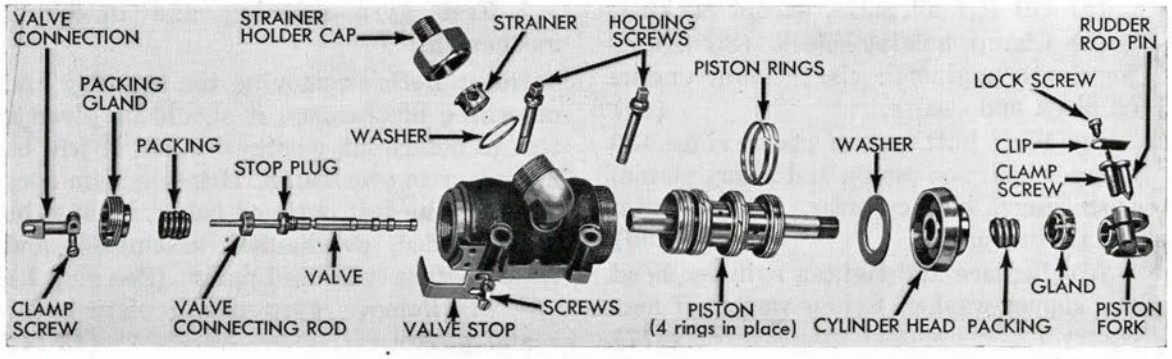

Figure 251

(b) Disassemble valve and connecting rod by placing valve in resting block, with pin lined up with hole in block, and drive out pin with 1/16-inch drift.

Note: Block and drift are not furnished; they should be made up by activity performing this step.

(c) Apply lapping compound sparingly on surfaces to be lapped, and insert valve in female lap WE148. Regulate adjusting screws in lap for proper friction and proceed to lap, moving valve in lap with a turning and reciprocating motion throughout its length (Fig. 250). **(WE148, 41)**

(d) Remove, examine, and measure diameter occasionally during lapping. Change to finest grade of lapping compound when valve measures 0.0005-inch large, and lap down to size. **(WE148, WE5, 41)**

(e) Wash compound from lap and valve with grease solvent, and blow dry with air.

(f) Finish lapping to a polish with oil (C). **(WE148)**

Note: The valve **must** be as nearly perfect a fit in piston as is possible to get without any appreciable friction when finished. See step K-1-(f) for test of sensitiveness of valve.

(g) After lapping, wash lap and valve with grease solvent and blow off with low-pressure air.

(h) Assemble valve and connecting rod and secure with pin, using resting block and drift.

9. Assemble engine (Fig. 251):

(a) Oil (C) all parts, except packing.

(b) Clamp holding block (SG 2537) for depth engine in vise; mount engine on block and secure. **(49)**

(c) Place butt ends of piston rings 180 degrees apart on piston and insert piston, with rings, into cylinder, being careful not to mar parts. **(230)**

(d) Replace and tighten cylinder head and copper washer. Renew washer if necessary. **(377)**

(e) Renew packing, being careful not to mar piston rods by using any sharp tools for pushing packing into place.

Note: An 11-inch length of packing is used for each gland. New packing should be immersed in oil (D) until ready for use.

(f) Install packing glands and set up hand-tight.

(g) Screw piston fork on piston to scribe mark, using same number of turns as on disassembly. Replace and tighten clamp screw. **(49)**

(h) Tighten up on packing glands gradually, turning and pushing piston back and forth by hand to work packing in around rods. **(169)**

(i) Insert depth-engine valve in piston and tighten valve stop plug. **(159)**

(j) Center piston in cylinder, using steel scale. **(WE8)**

(k) Center valve in piston. **(WE8)**

Note: Hole in knurled portion of valve connecting rod must be horizontal.

(l) Replace valve stop and adjust it so that scribe mark on stop lines up with scribe mark on valve connecting rod. Clamp adjustment with screw. **(41)**

(m) Make certain that strainer is clean, and replace it in nipple on cylinder.

(n) Replace washer and strainer holder cap. Tighten cap. **(402)**

10. Center valve and piston with air on engine. [See steps K-1-(a) and (b).]

11. Test valve for sensitiveness. [See step K-1-(f).]

12. Test assembled depth engine. (See step K-1.)

F. Test and Disassemble Gyro Mechanism

1. Test gyro spinning and unlocking mechanism:

Note: Before removing the spinning and unlocking mechanism, it should be given a test to determine whether or not it will be necessary to overhaul it. If mechanism does not pass the test outlined below, it must be disassembled, overhauled, assembled, and tested before it is used again. (See step I.)

(a) Remove gyro clamp plate cover and gasket. **(13-14)**

(b) Lock and unlock mechanism sev-

eral times. When mechanism is properly locked, hand trip lever will be flush against wall of gyro pot. If lever is not flush, unlock mechanism, turn spinning turbine, lock mechanism, and again note position of hand trip lever.

When mechanism unlocks, make certain it does so with a snap. Slow or sticky operation must be corrected by a thorough cleaning or overhaul. **(205A-246)**

(c) Lock mechanism; draw a pencil mark on spinning turbine for reference; and count number of turns required to unlock (should be 58 to 62 turns). **(205A-246)**

(d) If mechanism does not unlock with 58 to 62 turns, make necessary adjustment with duration-adjusting element. **(41)**

(e) Lock mechanism **(205A-246)**

(f) Connect high-pressure air line (2800 p.s.i.) to gyro spin nipple; turn on air and check for leaks around nipple joint and nozzle holes, using oil (C). **(229)**

(g) Turn off air; remove air line; and unlock mechanism. **(229)**

2. Remove six holding screws and spinning mechanism from gyro pot. **(40)**

3. Remove gyro reducing valve and pipes:

(a) Disconnect air pipe from gyro reducing valve to elbow in top plate. **(24)**

(b) Remove two holding screws and remove gyro reducing-valve assembly. **(205A-246)**

4. Disassemble parts on top plate:

(a) Remove two holding screws for bearing cap; remove bearing cap, valve rock shaft assembly, spring buttons, and springs. **(41)**

*(b) Remove clamp screws and washer for adjusting head, and remove adjusting head and valve connection-arm assembly from valve rock shaft. **(41)**

(c) Remove two keep screws and trunnion pins for pallet driving-gear bearing. **(41, 91)**

(d) Remove pallet driving gear with bearing and bearing cap; and remove connection shaft, bearing plunger, and spring.

(e) Remove four bearing-cap screws, bearing cap, and pallet driving gear **(41)**

(f) Remove six holding screws, driving spindle cap, and driving spindle. **(41)**

(g) Remove cotter pin and fulcrum pin for depth-engine valve operating lever. **(72, 40)**

(h) Remove cotter pin in pivot for pendulum tension rod (inside port pendulum arm) and remove pendulum tension rod with valve operating lever. **(72)**

(i) Remove holding screws securing pallet driving gear bracket to bracket for driving spindle. **(49)**

(j) Remove holding screws and upper spacing washers securing pallet driving-gear bracket to depth-mechanism casing. (See Note, below). **(161, 408)**

(k) Remove pallet driving-gear bracket and lower spacing washers.

Note: Mark upper and lower spacing washers so that they will be replaced properly when assembling.

(l) Remove four holding screws; remove steering engine valve guard; and remove bracket for driving spindle. **(49)**

(m) Remove six holding screws and remove gyro bottom head. **(205A-246)**

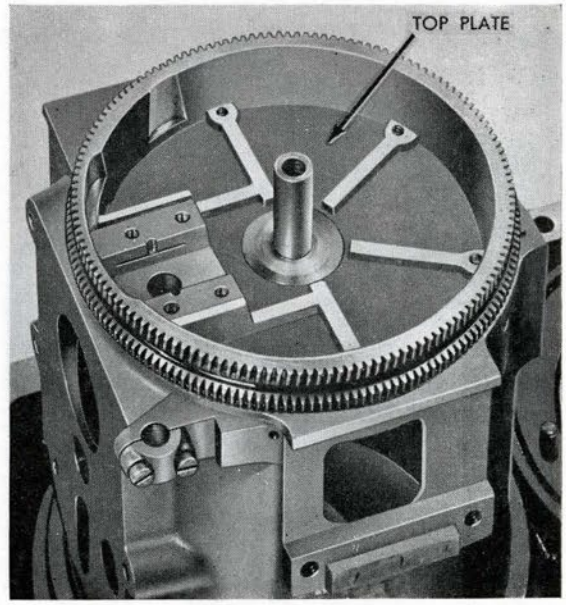

Figure 252

*(n) Remove outer race from top bearing holder. **(WE192)**

(o) Remove top bearing holder and spacing washer. **(WE165)**

Note: It is good practice to measure thickness of spacing washer upon removal, so that, in case of loss, a washer of proper thickness may be installed.

(p) Remove pallet pawl and linkage assembly:

(1) Remove cotter pins, spring washers, and friction springs over pallet pawls. **(92)**

(2) Remove cotter pin in pivot pin for bell crank, and remove pivot pin. **(92)**

(3) Remove pallet pawl and linkage assembly by sliding pawls clear of their pins and bell crank clear of connection spool.

(q) Loosen clamp screw nut and remove pallet. **(37)**

(r) Withdraw pallet shaft and leaf spring from the inside of gyro pot. Be careful not to lose leaf spring.

(s) Remove four holding screws and pallet slide cover. **(41)**

(t) Remove constant-spin pipe and elbow:

(1) Remove set screw in elbow. **(41)**

(2) Hold elbow with pliers; insert screw driver inside gyro pot; and unscrew long nipple from elbow. **(72, 41)**

(3) Remove long nipple, washer, and elbow.

Note: Be careful not to lose small washer between long nipple and elbow.

(u) Remove cam bevel gear, connection spool, and cam assembly.

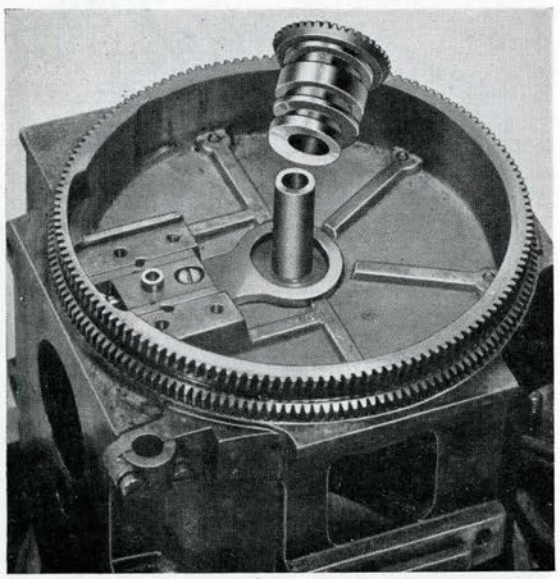

Figure 253

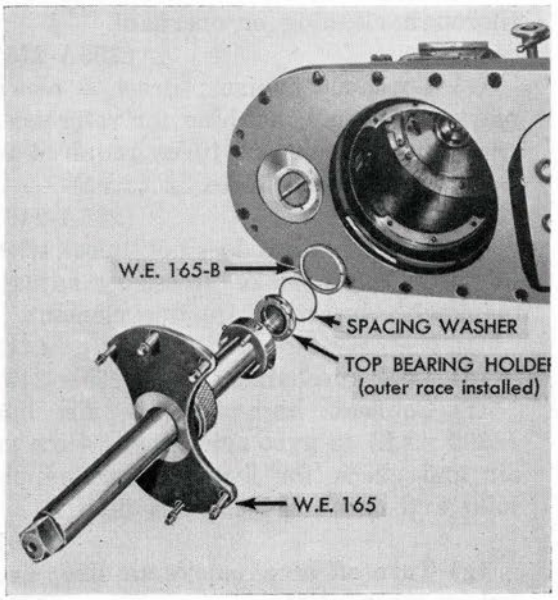

Figure 254

(v) Remove pallet slide and palletholder assembly.

*(w) Remove two screws and stop for top plate. **(41)**

*(x) Remove two screws and remove gyro pot marker. **(41)**

*(y) Remove six holding screws and remove top-plate retainer plates. **(41)**

*(z) Remove top plate from gyro pot.

*(aa) Remove angle fire socket, spindle, and worm from bracket for driving spindle:

(1) Remove lock screw from socket. **(37)**

(2) Remove nut and socket. **(40)**

(3) Remove spindle and worm from bracket.

The above completes the disassembly of the gyro mechanism.

G. Gyro Mechanism

1. Thoroughly clean and inspect all parts. Remove burrs if present.

*2. Replace marker in gyro pot and secure with two screws. (41)

*3. Try retainer plates in their recesses in top plate to ascertain that a snug fit is obtained. Oil (C) and try top plate on its seat in gyro pot to ascertain that it is a snug fit, without binding (Fig. 252).

*4. Replace retainer plates with zero graduation in line with marker in pot. Replace holding screws for retainer plates, setting up even and tight. Check that screw heads are flush with retainer plates, and note that no burrs were raised by screw driver. Turn top plate in both directions and note if binding at any point; if so, it may be necessary to relieve by scraping surfaces of retainer plates where binding occurs. (41)

*5. Replace gyro top-plate stop and secure with two screws. Again turn the top plate in both directions and note if binding on stop. Set top plate on zero. **(41)**

6. Note that pallet cam is a snug fit without binding in oval cam slot in pallet slide. Note that pallet-holder adjusting screw works freely. Install pallet slide, with holder assembled, in top plate.

7. Replace cam, connection spool, and cam bevel gear assembly (Fig. 253). Turn cam bevel gear to operate pallet slide and ascertain that no binding occurs. While turning cam bevel gear, check clearance between cam and slot in pallet slide. There should be about 3½ teeth "play" between the two parts.

8. Replace air connection for sustaining gyro:

(a) Replace long nipple by inserting it through inside of gyro pot. Hold nipple with screw driver. (41)

(b) Replace small washer and elbow over end of nipple; hold elbow with pliers and screw nipple into elbow. With nipple tight in elbow, end play should be about 0.005 inch. **(41, 72)**

(c) Secure elbow to nipple with set screw. (41)

9. Replace top bearing holder for gyro (Fig. 254).

*(a) Replace outer race in top bearing holder.

(b) Slip spacing washer over threads of top bearing holder and slip WE165B over spacing washer and flange of top bearing holder. **(WE165B)**

(c) Start top-bearing holder in top plate by hand.

(d) Tighten top bearing-holder assembly. Remove tools after tightening. **(WE165, WE165B, 205A-246)**

10. Replace gyro spinning and unlocking mechanism:

Note: For disassembly, overhaul, assembly and test of spinning mechanism, see step I.

(a) Replace mechanism on gyro pot and secure with six screws. (40)

(b) Lock and unlock mechanism several times to ascertain that it is working properly. Leave mechanism unlocked. **(205A-246)**

Note: If mechanism is properly adjusted, the hand trip lever should be flush with the side of the pot in the locked position.

11. Align axis of gyro with axis of centering pin of gyro spinning and unlocking mechanism:

Note: The gyro must be located in the gyro mechanism in such a way that the following conditions are met when the mechanism is in its operating position: (1) The axis of the gyro must be in alignment with the axis of the centering pin in the gyro spinning and unlocking mechanism. (2) The lower outer gimbal ring center of the gyro must rest on spring button in bottom head. (3) There must be 0.006 inch to 0.011 inch clearance in gyro bottom bearing. (4) There must be 0.0025 inch to 0.005 inch clearance in gyro top bearing.

Proceed as follows:

(a) If Gyro Adjusting Stand is available, place gyro mechanism in stand; secure with holding screws and turn mechanism bottom-up. If stand is not available, support gyro mechanism bottom-up on bench. (456)

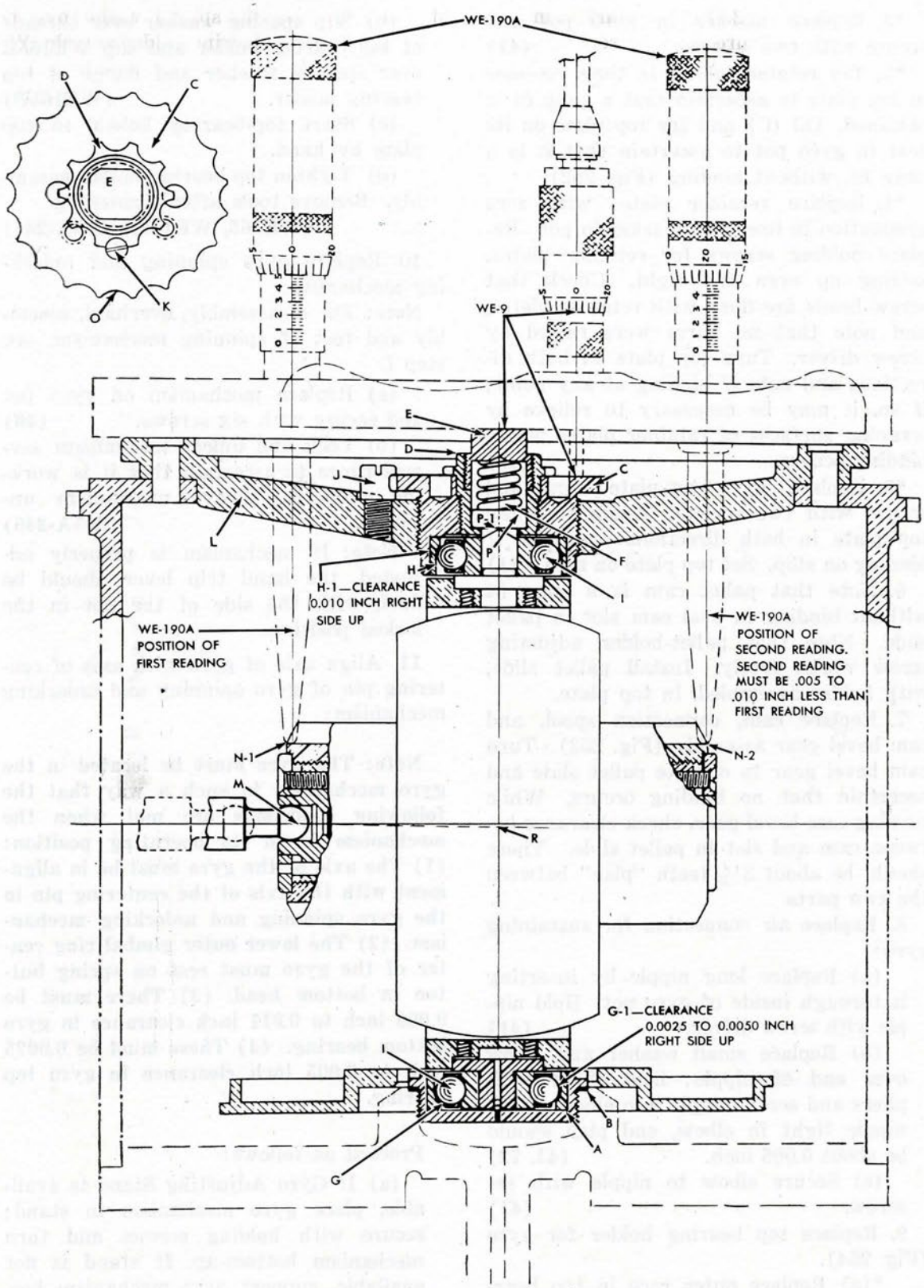
WE-190A
WE-9
D
C
E
K
O
J
L
P-1
P
F
H
I
H-1—CLEARANCE
0.010 INCH RIGHT
SIDE UP
WE-190A
POSITION OF
FIRST READING
WE-190A
POSITION OF
SECOND READING.
SECOND READING
MUST BE .005 TO
.010 INCH LESS THAN
FIRST READING
N-1
N-2
M
R
G-1—CLEARANCE
0.0025 TO 0.0050 INCH
RIGHT SIDE UP
B
A
G

Figure 255

(b) Install gyro in mechanism:

(1) Remove gyro clamp-plate cover and gasket. **(13-14)**

(2) Remove gyro bottom head. **(205A-246)**

(3) Check to see that top plate is set on zero.

(4) Turn pallet driving gear to move cam pawls to their extreme after position (away from cam on gyro).

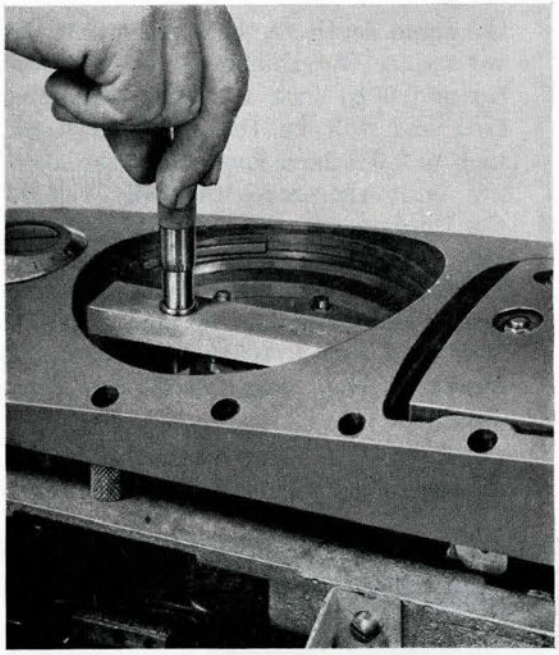

Figure 256

(5) If not already done, unlock gyro spinning and unlocking mechanism.

(6) Put two drops of oil (A) on gyro top bearing, using syringe.

(7) Install gyro with cam on gyro cam plate about 180 degrees from cam pawls; then rotate gyro into position.

Note: When installing gyro, take care not to damage extender in top bearing holder.

(8) Put two drops of oil (A) on gyro bottom bearing, using syringe.

(c) Install bottom head "L" with bottom-bearing holder "C" removed (Fig. 255). **(205A-246)**

(d) Install bottom bearing holder:

(1) Remove the adjusting body assembly: "D", "E", "F", and "P" from the bottom bearing holder. **(92, 41, 204)**

(2) Install the bottom bearing holder "C" and outer race "H".

(3) Set up on bottom bearing holder "C" until the balls "I" of both bottom and top races ("G" and "H") are in contact with the curved path of these races. **(463)**

Caution: Note that balls are properly centered in their races when executing above step. The balls for the lower bearing may be observed through the tapped hole in the bearing holder.

(e) Check spacing washer under top bearing holder for proper thickness:

Note 1: It is important that this washer be of correct thickness to insure the alignment of the axis of the gyro with the axis of the centering pin in the gyro spinning and unlocking mechanism when the torpedo is right-side-up. If the axes are not in alignment, the gyro will be deflected when the centering pin is withdrawn from the gyro after spinning.

Note 2: Since the relative heights of the gyro and the centering pin "M" cannot be measured directly on their axes, the relative heights are measured indirectly, with the mechanism inverted, by taking depth measurements at corresponding points on each end of the gyro inner gimbal ring ("N-1" and "N-2" in Fig. 255. One-half the difference between these two measurements ("R", Fig. 255) will be the amount which the axis of the gyro is out of alignment with the axis of the centering pin. With the gyro mechanism in the inverted position, the two axes are intentionally adjusted "by means of the spacing washer "B" under the top bearing holder" so that they are in misalignment by 0.0025 inch to 0.005 inch: $\frac{\text{("N-1" minus "N-2"}}{2} = \text{"R"} = 0.0025$ inch to 0.005 inch). This misalignment will be corrected later (step g) by giving the top bearing a clearance,

the amount of which is equal to "R". When the gyro mechanism is turned upright in its operating position, the gyro will drop down away from the top bearing a distance equal to "R" and the axes will then be in alignment. Proceed as follows:

(1) Lock gyro. **(205A-246)**

(2) Place micrometer base across seat for gyro clamp plate in pot, locating it so that depth-gage spindle will line up with outer edge of gimbal-ring locking end. (See location at "N-1", Fig. 255). Note measurement carefully (Fig. 256). **(WE190A)**

(3) Reverse location of depth micrometer so that depth-gage spindle will line up with outer edge of gimbal ring free end. (See location at "N-2", Fig. 255). Note measurement carefully. **(WE190A)**

(4) Subtract the second reading, "N-2", from the first reading, "N-1". The difference must be 0.005 inch to 0.010 inch. In other words, with the gyro mechanism inverted, the free end of the gyro inner gimbal ring must be 0.005 inch to 0.010 inch **lower** than the locking end of the inner gimbal ring. If not, the spacing washer under the top bearing holder must either be replaced with a thicker one or be reduced in thickness to meet the above condition.

(5) As an example, assume that the difference between "N-1" and "N-2" is minus 0.025 inch:

a. Unlock gyro.

b. Remove bottom head "L" **(205A-246)**

c. Remove gyro from mechanism.

d. Remove top bearing holder "A". **(WE165)**

e. Remove washer "B" under top bearing holder.

f. With micrometer calipers, measure thickness of this washer. **(WE5)**

Since the difference between "N-1" and "N-2" is minus 0.025 inch, and since the difference must be (plus) 0.005 inch to (plus) 0.010 inch to be correct, it is apparent that the free end of the gyro inner gimbal ring is higher instead of lower than the locking end, and it will be necessary to reduce the thickness of the washer enough to bring the free end from 0.005 inch to 0.010 inch lower than the locking end. If the thickness of the washer is reduced by 0.0125 inch (0.025 inch), the free end will be at

2

the same depth as the locking end. If we reduce the thickness by an additional 0.0025 inch to 0.005 inch, the free end will be the required 0.005 inch to 0.010 inch lower than the locking end; therefore, carefully reduce the thickness of the washer by 0.0150 inch to 0.0175 inch, replace washer, replace top bearing holder, and recheck measurements to make certain that 0.005 inch to 0.010 inch difference between "N-1" and "N-2" has been obtained.

(6) On the other hand, should the difference between "N-1" and "N-2" be more than (plus) 0.010 inch, it is obvious that the washer "B" is too thin, in which case a new washer of the proper thickness will have to be fitted and the measurements rechecked.

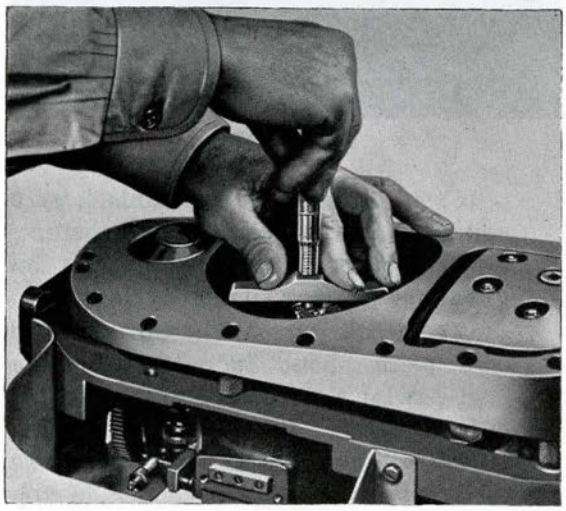

Figure 257

(f) When certain that spacing washer "B" is of proper thickness, adjust bottom bearing holder to give total clearance for gyro top and bottom bearings:

Note: A total clearance of 0.0125 inch for the gyro top and bottom bearings is the most desirable. The most desirable distribution of this total clearance is 0.0025 inch for the top bearing and 0.010 inch for the bottom bearing, when the gyro mechanism is right side up. The total clearance is obtained by backing off the bottom bearing holder with the mechanism inverted. As will be seen below, the above adjustments may vary slightly because a scallop of the bottom bearing holder may not line up with the lock-screw hole, in which case the scallop nearest the screw hole, in the direction of turning, should be moved in line with the lock screw hole.

The external diameter of the bottom-bearing holder "C" is threaded 20 threads to the inch, and 20 scallops "O" are machined around a flange on its outer end for alignment with the keep screw "J". Thus it will be seen that rotating the holder one scallop in the bottom head will cause the holder (and ball race) to move up or down by 0.0025 inch (or 1 inch). Proceed as follows:

$\frac{}{400}$

(1) Make certain that bottom-bearing holder "C" is set up so that balls "I" of both bottom and top races ("G" and "H") are in contact with the curved paths of these races. (See **Caution** under step (d), (3). **(204)**

(2) See that a scallop "O" on the bottom bearing holder "C" lines up with the hole for keep screw "J". If, before turning the bearing holder, the scallop nearest the locking screw hole is ½ scallop, or **less,** out of alignment with keep screw hole in direction of turning, back off to nearest scallop; then back off five additional scallops and install keep screw "J" in cotter pin. The lower and upper limits of the total clearance thus obtained will be 0.0125 inch and 0.01375 inch. **(41, 92)**

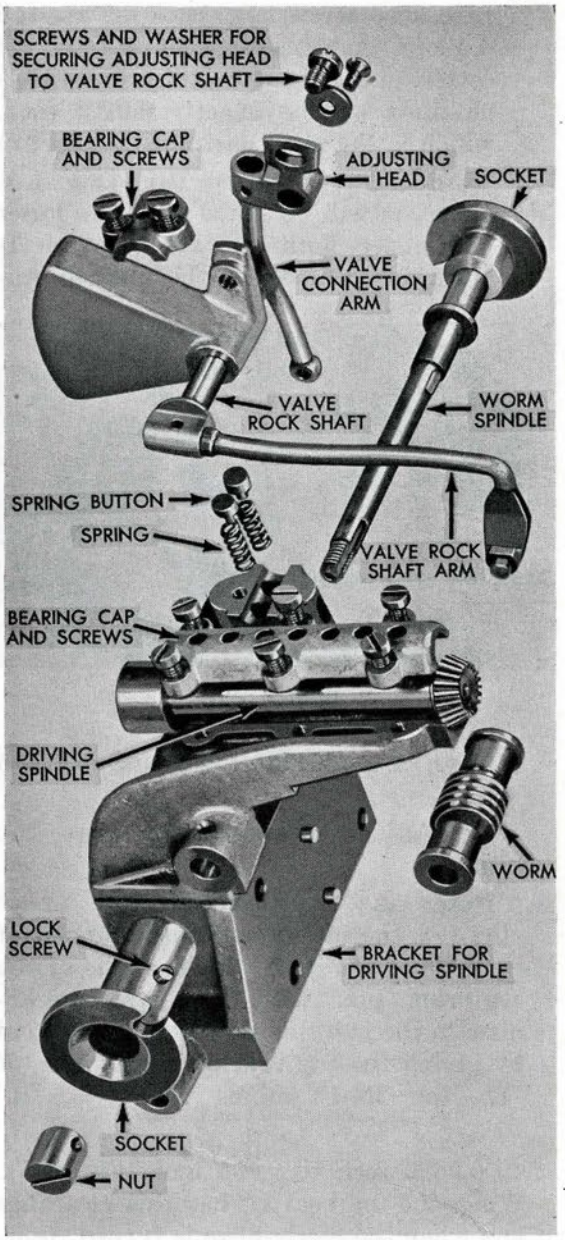

Figure 258

(3) If the lining up of the first scallop, in the direction of turning, takes **more** than ½ scallop, back off to nearest scallop; then back off four additional scallops and install keep screw "J" and cotter pin. The lower and upper limits of the total clearance thus obtained will be 0.01125 inch and 0.0125 inch. **(41, 92)**

(4) If, before turning bottom-bearing holder, a scallop is lined up exactly

with keep screw hole, back off five full scallops and install keep screw and cotter pin. The total clearance thus obtained will be exactly 0.0125 inch, which is the most desirable. **(41, 92)**

Note: From steps (2) and (3), above, it will be noted that the lower and upper limits of the total clearance, as obtained by the method out-

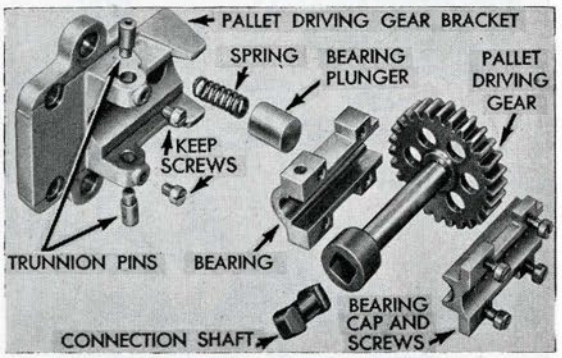

Figure 259

lined, are 0.01125 inch and 0.01375 inch.

(g) Adjust clearance for gyro top bearing:

Note: As explained in **Note** under step (e), the intentional misalignment of the axis of the gyro with the axis of the centering pin, with the gyro mechanism in the inverted position, is corrected by giving the top bearing a clearance of "R" (or $\frac{\text{"N-1" minus "N-2"}}{2} = \text{"R"}$ = 0.0025 inch to 0.005 inch, Fig. 255). When the top bearing has this clearance and when the mechanism is turned right-side-up, the gyro will drop away from the top bearing holder a distance equal to "R" and the axes will then be in alignment.

Proceed as follows:

(1) Ascertain that gyro is properly seated on its upper bearing, with balls "I" contacting curved path of the outer race "G".

(2) Install adjusting-body assembly: "D", "E", "F", and "P" in bottom bearing holder "C".

(3) Set up on adjusting body until no vertical play can be felt between upper bearing (at "G-1") and lower bearing (at "P-1"). **(204)**

(4) Place micrometer depth gage with the base resting on the flat face of plug "E". (See Fig. 255, also Fig. 257). **(WE9)**

Note: Make certain that face of plug is clean, smooth, and free from burrs before taking measurements.

(5) Measure depth to flat face on bottom bearing holder "C" and note this reading carefully. **(WE9)**

(6) Remove and reset micrometer depth gage, adding one-half of the difference between the reading (of WE190A) at "N-1" and "N-2", as taken in step (e). **(WE9)**

(7) Back out the adjusting body "D" sufficiently to permit measuring spindle on micrometer depth gage (WE9) to clear flat face on bottom bearing holder "C", when base of gage is resting flush on plug "E"; and replace depth gage on plug "E". **(WE9)**

(8) Screw in on adjusting body "D" until measuring spindle on depth gage just contacts the flat face on bottom bearing holder "C" with the base of depth gage flush on plug "E". This will give a clearance (at "P-1") equal

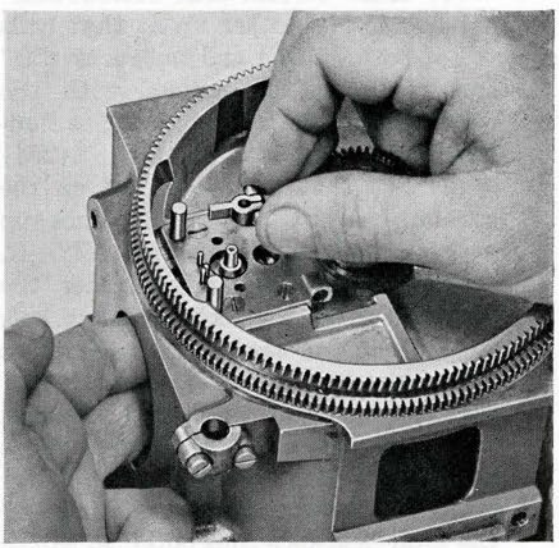

Figure 260

to the difference in depth-gage adjustment as reset in step (g), (6), above, and consequently a similar clearance at "G-1" with the mechanism right-side-up. **(204, WE9)**

(9) Secure adjustment made in step (8), above, with lock screw "K" and cotter pin. **(41, 92)**

Note: It is not always possible to secure adjustment obtained in step (8), above, without a slight change, as the scallop in adjusting body "D" may not line up with the hole for lock screw "K", thus making it necessary to turn the nearest scallop into alignment for lock screw. Change so made is considered negligible and is within the tolerance of allowable bearing clearances.

(h) Lock Gyro. **(205A-246)**

(i) Remove mechanism from Gyro Adjusting Stand or turn it right-side-up on bench. **(456)**

Note: As a result of the above procedures, the gyro is now in correct alignment in the gyro mechanism: (1) The axis of the gyro is in alignment with the axis of the centering pin in the gyro spinning and unlocking mechanism. (2) The lower outer gimbal ring center of gyro is resting on spring button in bottom head. (3) The gyro bottom bearing has a clearance of 0.006 inch to 0.011 inch (total clearance of 0.01125 inch to 0.01375 inch minus top bearing clearance of 0.0025 inch to 0.005 inch). (4) The gyro top bearing has a clearance of 0.0025 inch to 0.005 inch.

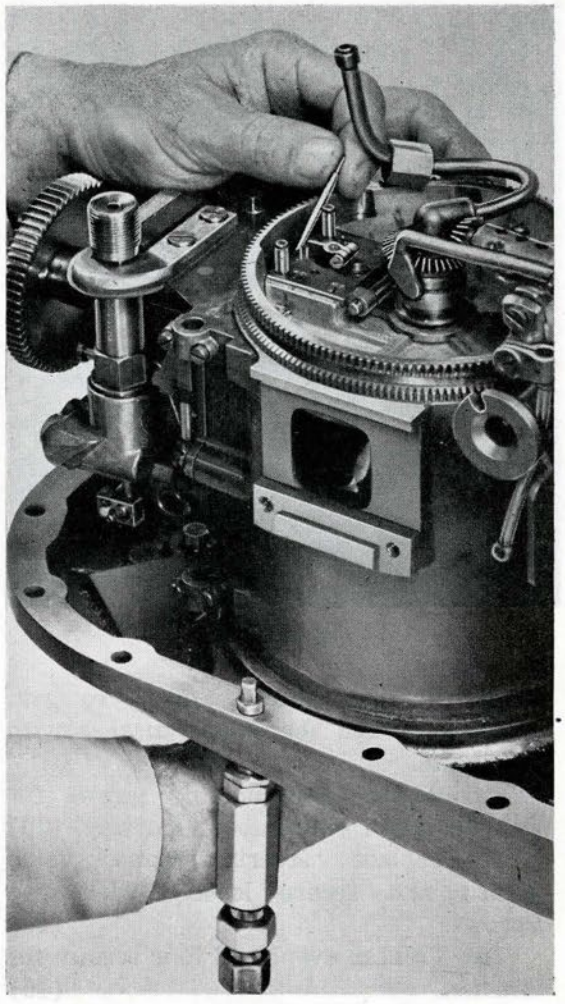

Figure 262

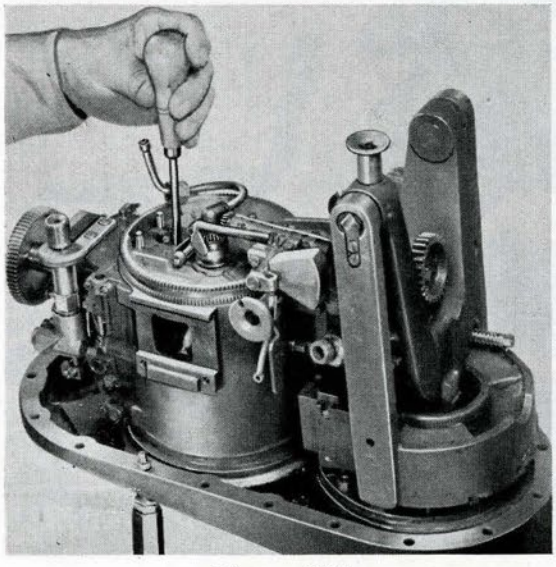

Figure 261

*12. Replace angle fire spindle, socket, and worm on bracket for driving spindle (Fig. 258).

(a) Place worm in bracket, with holes in alignment.

(b) Insert spindle, lining up key on spindle with keyway in worm.

(c) Replace socket on spindle and secure with nut and lock screw. **(40, 37)**

13. Replace bracket for driving spindle (Fig. 258).

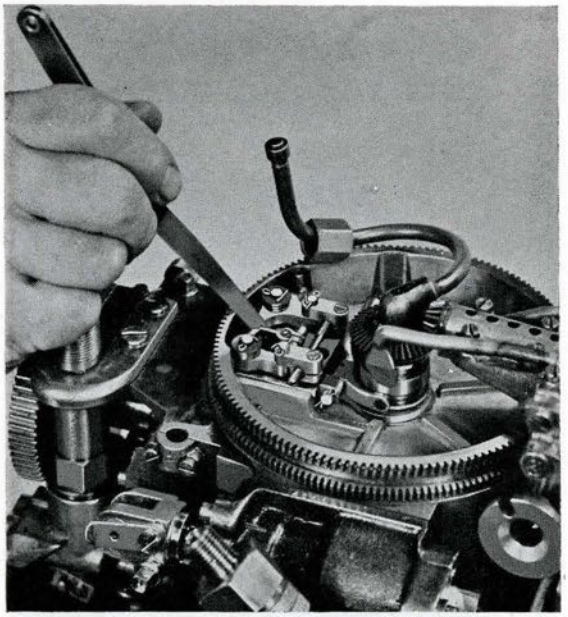

Figure 263

(a) Replace bracket on gyro pot, making certain that worm meshes with top plate.

(b) Replace two holding screws for bracket and tighten about halfway. (49)

(c) Replace steering-engine valve guard and secure loosely with two screws. (40)

(d) Tighten evenly all four screws for bracket. (49)

(e) Oil (C) bearing for angle fire worm and turn top plate with worm to extreme travel in both directions. Note if there is binding at any point; binding should be relieved by stoning. Turn top plate to zero.

14. Replace pallet driving-gear bracket (Fig. 259):

(a) Replace proper lower spacing washers on depth-mechanism casing.

(b) Replace bracket over spacing washers and over holes in bracket for driving spindle.

(c) Replace proper upper spacing washers on bracket over holes in depth-mechanism casing.

(d) Replace screws which secure bracket to depth-mechanism casing. Leave screws loose. (161, 408)

(e) Replace screws which secure bracket to bracket for driving spindle. Leave screws loose. (49)

(f) Tighten all screws evenly. (49, 161, 408)

15. Oil (C) and replace driving spindle in bracket, with teeth on driving pinion in mesh with teeth on cam bevel gear. Replace bearing cap on bracket and secure with six holding screws. Turn spindle and cam bevel gear and note if they turn freely without binding. (41)

Note: If pertinent parts have been renewed, it may be necessary to fit them to prevent binding.

16. Replace pallet driving gear and bearing (Fig. 259):

Note: Oil (C) all parts during assembly.

(a) Install pallet driving gear in bearing.

(b) Replace bearing cap and secure with four holding screws. Note that driving gear turns freely in its bearing. (41)

(c) Replace spring and plunger for driving gear bearing.

(d) Replace connection shaft in end of pallet driving gear; install pallet driv-

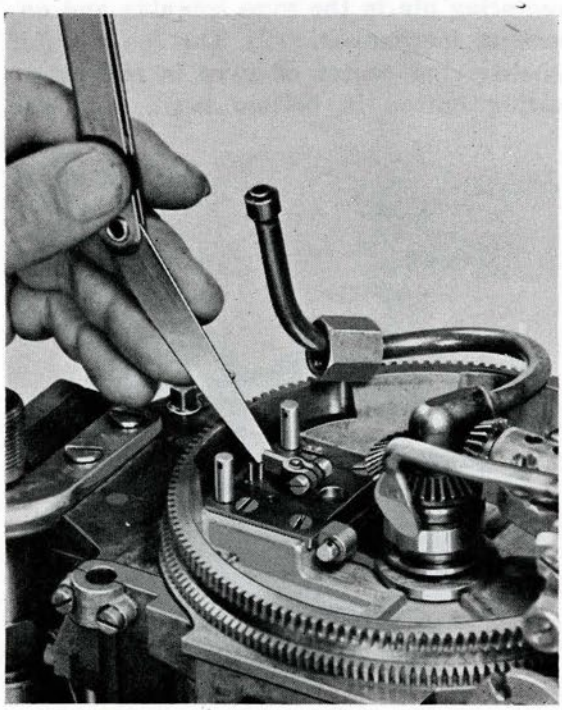

Figure 264

ing-gear and bearing assembly in pallet driving-gear bracket, guiding after end of connection shaft into square hole in driving spindle.

(e) Replace the two trunnion pins with notched sides facing up, and secure with trunnion-pin keep screws. (41)

(f) Turn pallet driving gear and note if there is any binding.

17. Inspect pins in pallet-slide cover and make certain that they are firm and straight. Replace cover and secure with four screws. After tightening screws, turn pallet driving gear to operate pallet slide, and note that there is no binding. Move pallet slide to its extreme after position. (41)

18. Replace pallet shaft with cam pawls and spring, noting that:

(a) There is 0.001 inch to 0.003 inch total side clearance between cam pawls and cam on gyro cam plate. (Check this clearance before replacing pallet shaft assembly in pallet holder).

(b) Cam pawls fit tightly over end of pallet shaft, with no lost motion.

(c) Leaf spring is in place on shaft and is under slight compression, as evidenced by its 'bowed" shape when installed.

(d) The 5/32-inch diameter of upper end of pallet shaft extends just above upper end of bearing in pallet holder, so that pallet shaft will have 0.001 inch to 0.002 inch vertical clearance when pallet is assembled.

(e) Pallet shaft is a lap fit with unrestricted rotary movement in bearing in pallet holder.

19. Replace pallet on pallet shaft (Fig. 260) noting that:

(a) Pallet is free of burrs, that edges are sharp and square, and that blade is of proper thickness (0.063 to 0.065 inch). (WE5)

(b) Pallet fits snugly on pallet shaft.

(c) Pallet is centered approximately on pallet shaft.

(d) Pallet is installed and clamped on pallet shaft, so that there is a slight vertical play of shaft (0.001 inch to 0.002 inch). (41)

20. Adjust clearance between cam on gyro and cam pawls and center pallet:

(a) Ascertain that gyro is locked. (205A-246)

(b) Ascertain that top plate is set on zero.

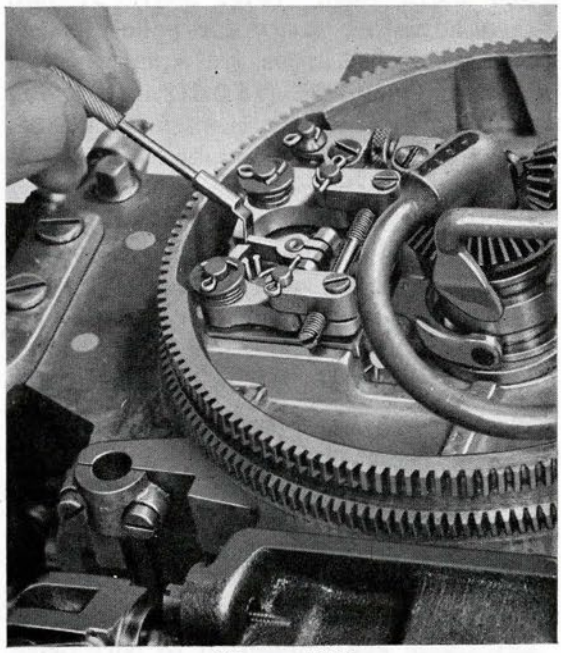

Figure 265

(c) Turn pallet driving gear slowly to move cam pawls in toward cam on gyro cam plate. Make certain that cam pawls straddle cam. If they do not, turn top plate to center cam pawls around cam, and reset pot marker. (41)

(d) With cam pawls straddling cam, center pallet between pins on pallet-slide cover. Clamp adjustment by tightening screw and nut on pallet. Check adjustment after tightening. (WE2A, 41)

(e) Loosen clamp screw for pallet holder (Fig. 261). (41)

(f) Unlock gyro.

(g) Move cam pawls in toward cam on gyro cam plate by turning pallet driving gear. Swing gyro slowly in azimuth. At any indication of cam pawls binding on cam, turn pallet-holder adjusting screw to give more clearance (Fig. 262). (145)

h. With cam pawls in extreme forward position, continue to move gyro slowly in azimuth and check clearance between pallet and pins on pallet-slide cover when pallet is in extreme right and left positions toward pins. The clearance for both positions of pallet must be equal and must be between 0.010 inch and 0.012 inch. (Fig. 263). If not, turn adjusting screw for pallet holder. When the clearances are equal and are between 0.010 inch and 0.012 inch, swing gyro slowly through an angle of 360 degrees in azimuth and make certain that it swings freely, with no binding in any position. Contact between the cam pawls and the ridges on the gyro cam plate should be barely perceptible. After adjustment has been made, tighten clamp screw for pallet holder and lock gyro.

(145, WE2A, 41, 205A-246)

21. Replace pallet pawl and linkage assembly on pallet-pawl pins:

(a) Turn pallet driving gear to bring pallet forward.

(b) Clean and inspect pallet pawls. Edges must be sharp.

(c) If previously removed, assemble adjustable eye connection to port pallet pawl and bell crank, and secure with cup washers and cotter pins. **(92)**

(d) Replace pallet pawl assembly on pallet-slide cover pins, engaging bell crank in spool.

Note: Pallet pawls must be a snug fit, without binding, on pallet-slide cover pins.

(e) Hold pallet pawls in neutral position and turn pallet driving gear until pallet is in the extreme after position. Measure clearance between pallet and pallet pawls. This clearance should be 0.003 to 0.005 inch between either side of pallet and pallet pawl being measured (Fig. 264).

Note: If clearance obtained above is too small, stone pallet pawls. Edges must be sharp and free of burrs. If clearance is too large, replace parts as necessary.

(f) Line up holes in bell crank with holes in pallet-slide cover; replace bell crank pin and secure with cotter pin. **(92)**

(g) Replace friction springs and washers on pallet pawls and secure with cotter pins. **(92)**

22. Replace valve rock-shaft assembly:

(a) Oil (C) and replace two friction springs and two buttons in valve rock-shaft bearing.

(b) Note that rock-shaft arm, counterweight, and valve connection arm are tight.

*(c) If previously removed, assemble adjusting head on rock shaft. **(41)**

(d) Line up pin on after end of rock-shaft arm in annular groove on connection spool, and install the rock-shaft assembly in its bearing in bracket for driving spindle.

(e) Replace cap and secure with two holding screws. **(41)**

23. Install steering engine on gyro pot and secure with two holding screws. Do not connect valve link at this point. **(49)**

Note: For disassembly, assembly, overhaul and test of steering engine, see step K.

24. Adjust linkage from connection spool to steering-engine valve:

(a) Move steering-engine valve all the way out; move valve connection arm in the same direction and note if it moves farther than valve.

(b) Move steering engine valve all the way in; move valve connection arm in the same direction and note if it moves farther than valve.

Note: If valve connection arm moved a greater distance than valve in either direction, the connection may be considered properly lined up. If the valve, however, has a further movement than the valve connection arm in either direction, it will be necessary to readjust by moving the valve connection-arm adjusting head on the rock shaft. If this adjustment is insufficient, it will be necessary to realign the valve connection arm by bending.

(c) Connect valve connection arm to steering engine valve link. **(205A-246)**

(d) Move steering-engine valve all the way forward. In this position, note vertical clearance between connection spool and pallet-slide cam.

(e) Move steering engine valve all the way aft. In this position note vertical clearance between connection spool and the cam bevel gear.

Note: If linkage from connection spool to steering-engine valve is correctly adjusted, clearances obtained in steps (d) and (c), above, should be approximately the same.

25. Adjust clearance between end of pallet and pallet pawls:

(a) With gyro locked, turn driving gear to move pallet clear of pallet pawls; turn pallet to port; turn driving gear to move pallet to its extreme after position and adjust clearance between the end of the pallet and the port pallet pawl to between 0.003 inch and 0.004 inch. To make this adjustment, loosen clamp screws and turn adjusting screw for the eye connections until correct clearance is obtained. Tighten clamp screws (Fig. 265).

(41, 145, WE161, WE161A)

(b) Turn driving gear to move pallet clear of pallet pawls; turn pallet to starboard; turn driving gear to move pallet to its extreme after position and adjust clearance between the end of the pallet and the starboard pallet pawl to between 0.003 inch and 0.004 inch. To make the adjustment, loosen clamp screws and turn the pallet linkage-adjusting screw until correct adjustment is obtained. Tighten clamp screws.

(41, 145, WE161, WE161A)

(c) After the above adjustments are made, check them to make sure that no binding exists between pallet and either pawl and that clearance between pallet and pawl being measured is 0.003 inch to 0.005 inch (see Fig. 264). **(WE2A)**

26. Check centering of pallet and top plate:

(a) Check to see that top plate is on zero.

(b) Ascertain that gyro is locked.

(c) Place and hold pallet pawls in neutral position.

(d) Turn pallet driving gear and note if cam pawls straddle cam on gyro. If cam pawls do not straddle cam, turn top plate until they do, and re-set pot marker.

(e) After top plate has been centered, turn pallet driving gear and note if pallet passes between pallet pawls. If pallet touches either pallet pawl instead of passing between them, re-center pallet.

(f) If it was necessary to adjust top plate or pallet in steps (d) and (e), repeat step 25.

27. Test friction in linkage from pallet pawls to steering-engine valve:

Note: In order to prevent fluttering of the linkage from pallet pawls to steering engine valve, with consequent erratic movement of this valve, two spring buttons are installed in the valve rock-shaft bearing. The springs for these buttons should be adjusted to require the application of not less than 10 ounces, nor more than 12 ounces on the valve end of the valve connection arm to cause the linkage to mave full-throw in either direction.

(a) Disconnect valve link from valve connection arm. **(205A-246)**

(b) Turn driving gear to clear pallet from pallet pawls.

(c) Move valve connection arm all the way aft with feather gage, contacting the lower end of valve connection arm. Measure push required to move linkage for full throw. **(MF7)**

(d) Move valve connection arm all the way forward and repeat test for reverse throw. **(MF7)**

Note: As previously stated, the linkage should move full-throw by the application of a 10- to 12-ounce force on the lower end of the valve connection arm. If less than a 10-ounce force is required to move linkage, it will be necessary to remove the rock shaft and stretch the springs under the spring buttons in the

rock-shaft bearing, assemble, and repeat test until correct readings are obtained.

(e) Re-connect valve link to valve connection arm. **(205A-246)**

28. Check clearances between end of pallet blade and pallet pawls with air on steering engine:

(a) Unlock gyro.

(b) Connect low-pressure air line (approximately 450 p.s.i.) to steering engine and turn on air. **(141A)**

(c) Turn driving gear to clear pallet from pallet pawls.

(d) Swing gyro in azimuth to move pallet to port; turn driving gear to move pallet to its extreme after position. Note performance of steering engine.

(e) Turn pallet driving gear to clear pallet from pallet pawls.

(f) Swing gyro in azimuth to move pallet to starboard. Turn pallet driving gear to move pallet to its extreme after position. Note performance of steering engine.

Note: Full, snappy throws of steering engine should be obtained with the above procedure; if not, readjust clearances between end of pallet blade and pallet pawls.

(g) After satisfactory test has been made, disconnect air line from steering engine; remove gyro; replace bottom head, gasket, and gyro clamp plate cover. **(141A, 205A-246, 13-14)**

Note: If a Gyro Adjusting Stand is available, a running test will be made on the Gyro Mechanism and Gyro (see step H). If this stand is not available, disconnect and remove steering engine in step 28, (g), above. The gyro and gyro mechanism should then be given a running test in the Afterbody Adjusting Stand. (See Section 10).

29. Replace tension rod and valve lever assembly on depth mechanism:

(a) Assemble pendulum tension rod on its pivot in port pendulum arm and secure with cotter pin. **(72)**

(b) Secure depth-engine valve operating lever to bracket for driving spindle and fulcrum pin and cotter pin. **(40, 72)**

H. Running Test of Gyro and Gyro Mechanism

Note: The gyro and gyro mechanism should be given a running test in the Gyro Adjusting Stand, if this stand is available. The procedure given below outlines the test.

1. Place gyro mechanism in stand and secure with holding screws. **(456)**

2. Install gyro in mechanism:

Note: The gyro must be in proper working order. (See steps L and M.)

(a) Remove gyro clamp plate cover and gasket. **(13-14)**

(b) Remove gyro bottom head. **(205A-246)**

(c) Check to see that top plate is set on zero.

(d) Turn pallet driving gear to move cam pawls away from cam on gyro.

(e) If not already done, unlock gyro spinning and unlocking mechanism.

(f) Put two drops of oil (A) on gyro top bearing, using syringe.

(g) Install gyro with cam on gyro

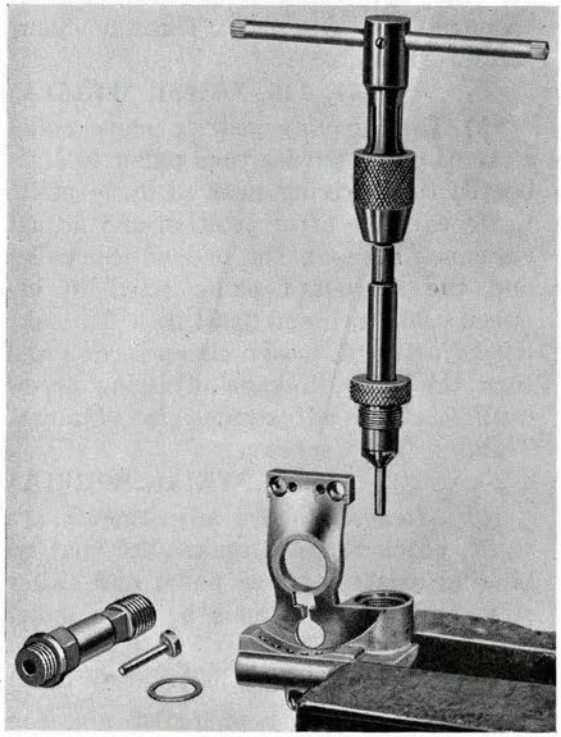

Figure 266

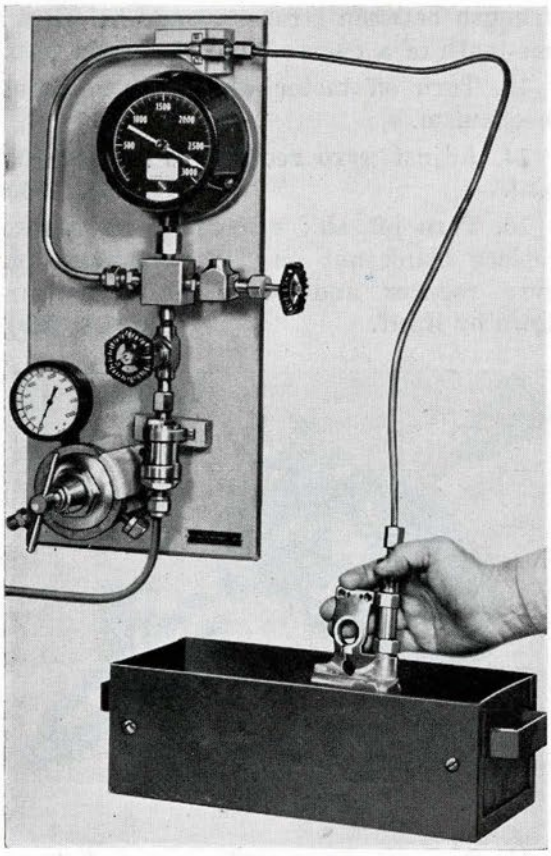

Figure 267

cam plate about 180 degrees from cam pawls; then rotate gyro into position.

Note: When installing gyro, take care not to damage extender in top bearing holder.

(h) Put two drops of oil (A) on gyro bottom bearing, using syringe.

(i) Install gyro bottom head. **(205A-246)**

Note: While installing bottom head, rotate gyro to make certain it does not "hang up" on either bearing.

3. Lock gyro. **(205A-246)**

4. Turn mechanism right-side-up and set stand on zero.

5. Connect high-pressure air line (2800 p.s.i.) to gyro spin nipple. **(229)**

6. Connect low-pressure air line (450 to 500 p.s.i.) to steering engine. **(141A)**

7. Remove blank nut from "T" connection on gyro reducer and connect gage pipe to nipple. **(141A)**

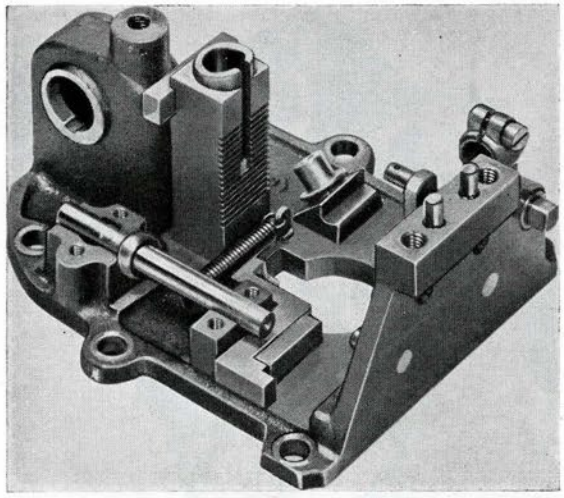

Figure 268

8. Turn on air to steering engine and adjust gyro reducer to deliver 100 p.s.i. **(48, 155)**

Note: When a torpedo is running, pressure is built up in the afterbody. This pressure has a subtractive effect on the pressure from the gyro reducer. Setting the gyro reducer to deliver 100 p.s.i. for the stand test, simulates actual running condition of the torpedo. After the stand test, the gyro reducer is set to deliver 125 p.s.i. (See step 14).

9. Turn on motor which drives pallet mechanism.

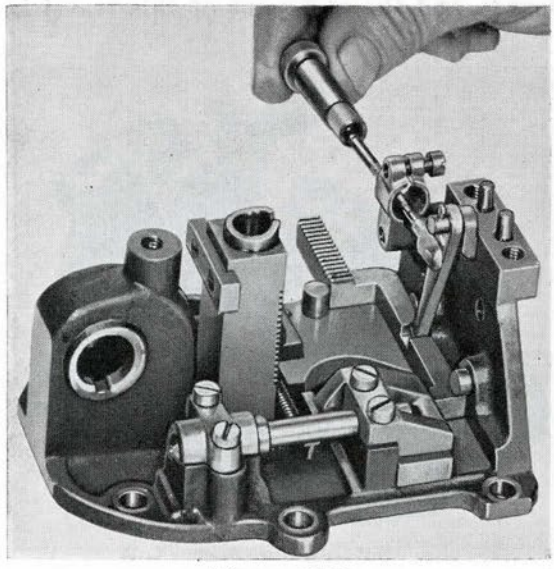

Figure 269

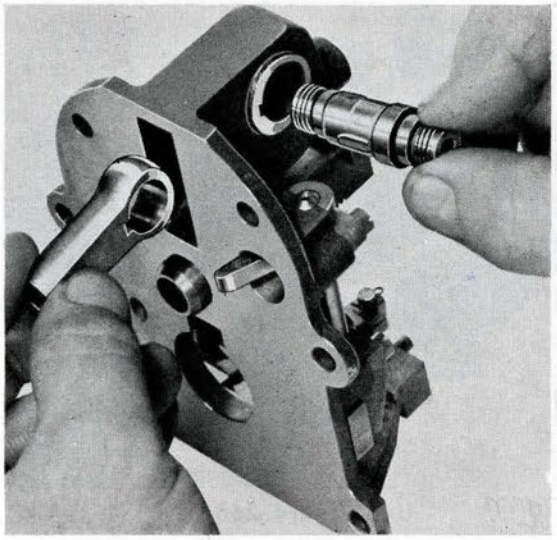

Figure 270

10. Throw over the lever handle of the quick-opening valve in the high-pressure line and throw back as soon as the gyro unlocks.

11. Move stand off zero and note position of stand pointer when steering engine makes a stroke.

12. As soon as engine moves, reverse direction of stand and note position of stand pointer at second engine stroke.

Note: The total movement in azimuth of the stand between strokes of the engine should be not more than four-tenths of a degree, and the mid-point of this travel in azimuth between strokes should be within one-tenth of a degree from the stand zero.

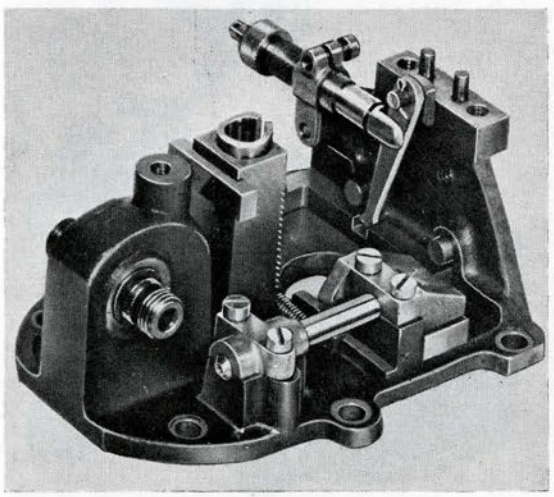

Figure 271

13. Turn off motor which drives pallet mechanism.

14. Adjust gyro reducer to deliver 125 p.s.i. **(48, 155)**

15. Turn off air; disconnect air pipes; replace blank nut on "T" connection on gyro reducer and permit gyro to run down by itself. **(141A, 229)**

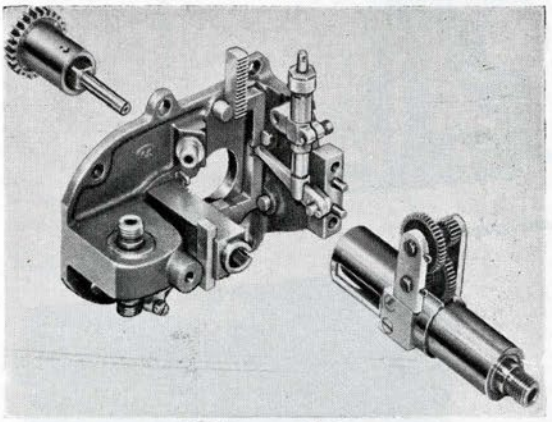

Figure 272

16. Remove gyro; replace gyro bottom head; replace gyro clamp plate cover and gasket and remove mechanism from stand. **(205A-246, 13-14, 456)**

17. Should the assembly fail to operate within the specified limits given in **Note** under step 12, the following should be investigated as sources of trouble:

(a) Lost motion between top plate and gyro pot.
(b) Top plate not centered.
(c) Wrong gyro height.
(d) Gyro not properly balanced.
(e) Bad balls in gyro bearings.

Steps D to G, above, cover the overhaul, assembly and test of the depth mechanism and gyro mechanism. Steps H to M, below, cover the disassembly, overhaul, assembly, and test of component units of these mechanisms.

I. Gyro Spinning and Unlocking Mechanism

Note: In step F-1, the gyro spinning and unlocking mechanism was given a test. If the mechanism did not pass test satisfac-

torily, it must be disassembled, overhauled, assembled, and tested in accordance with procedure outlined below:

*1. Disassemble:

(a) Hold spinning gear in vise between copper jaws and unscrew spinning turbine from spining shaft. Remove thrust washer. **(25)**

(b) Remove cotter pin from pin for spring guide pin and remove spring guide pin with spring. **(92, WE178)**

(c) Remove nut and washer from spring bell crank end of rock shaft. **(141A)**

(d) Remove spring bell crank. (It may be necessary to pry off with two screw drivers).

(e) Remove nut and washer from valve bell crank end of rock shaft. **(141A)**

(f) Remove pinion between upper and lower racks.

(g) Remove rock shaft, valve bell crank, and locking lever.

(h) Remove two screws and nipple holder from spinning-gear frame.

(i) Remove cotter pin from lower holding screw; remove holding screws; and remove front plate assembly. **(72, 40)**

Note: Exercise care not to bend dowel pins when removing front plate assembly.

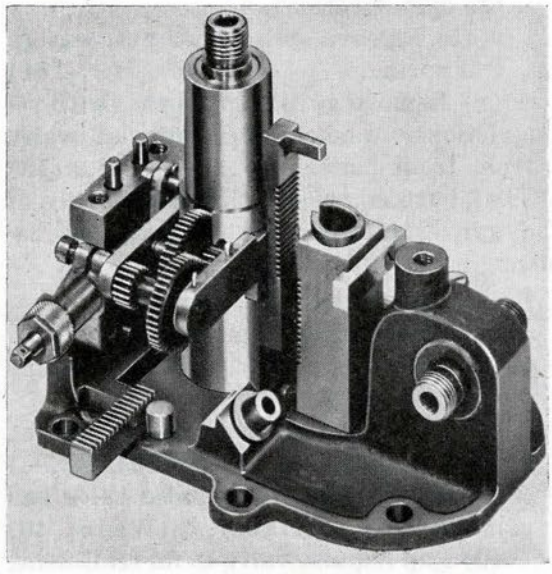

Figure 273

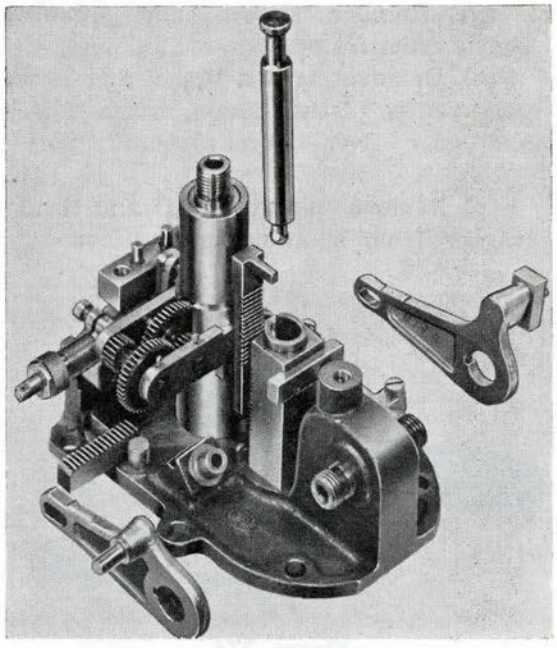

Figure 274

(j) Extend spinning shaft assembly; remove screw and remove upper rack. **(37)**

Note: Take care not to bend dowel pins in upper rack.

(k) Remove centering pin.

(l) Remove controlling sleeve assembly from spinning shaft sleeve.

(m) If necessary to remove spinning gear from controlling sleeve, prick-punch centers of rivets in face of spinning gear, drill out rivets, and remove spinning gear and split retainer washer.

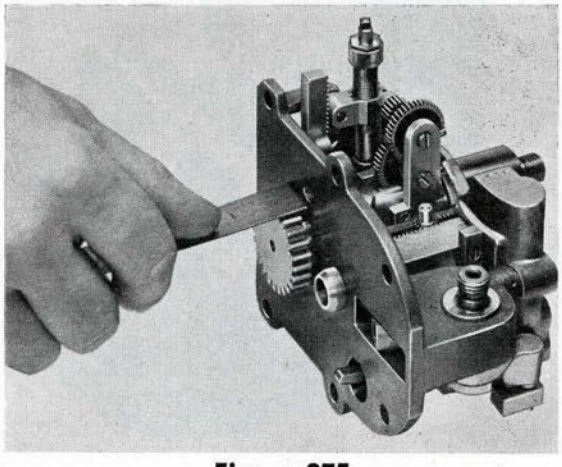

Figure 275

(n) Remove sleeve (and spinning shaft) from frame.

(o) Remove screws, upper and lower gear center plates, pinion, worm wheel, and gear from spinning-shaft sleeve. (41)

(p) Remove spinning shaft and thrust washer from spinning-shaft sleeve.

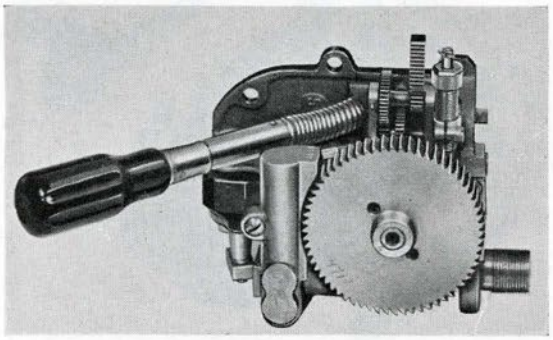

Figure 276

(q) Remove screws and upper and lower bearing caps (for hand trip lever) from frame. (41)

(r) Disconnect spring from hand trip lever and remove hand trip lever. (92)

(s) Remove unlocking bar.

(t) Remove lower rack. (It may be necessary to loosen rack by tapping with a soft hammer).

(u) Remove hinge (holding) screw, cotter pin from fulcrum pin for spring lever, and remove duration-adjusting element assembled. (49, 92)

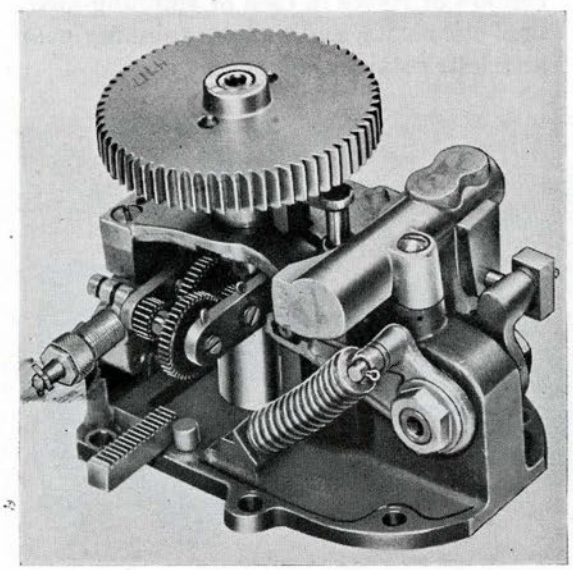

Figure 277

(v) Remove unlocking rack.

(w) Disassemble duration-adjusting element:

(1) Loosen hinge clamp screw. (41)

(2) Remove cotter pin and nut from spring rod. (92, 205A-246)

(3) Slide spring rod with spring lever out of spring case.

(4) Unscrew spring case from hinge.

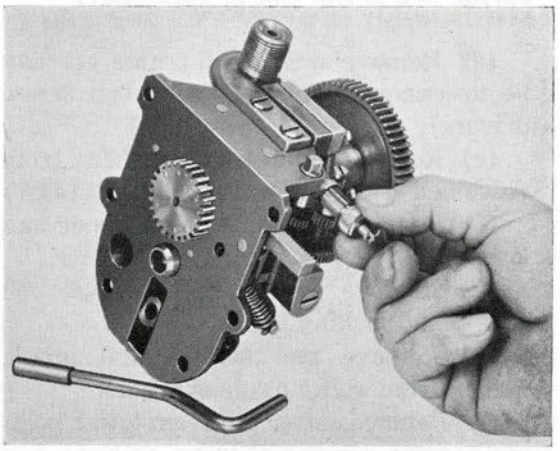

Figure 278

(Note location of hinge on spring case prior to unscrewing, in order that assembly may be made without affecting the spin duration).

(5) Remove spring case nut, washer and spring. (161)

(x) Remove gyro spin nipple (with restriction), washer, and impulse valve from front plate. (18)

The above completes the disassembly of the gyro spinning and unlocking mechanism.

*2. Overhaul, assemble, and test:

(a) Thoroughly clean and inspect all parts. Remove burrs if present. Apply oil (C) to parts.

(b) Chase threads and reseat seat on gyro spin nipple. (WE94, WE83)

(c) Reseat seat for impulse valve and grind in valve (Fig. 266). (WE164, 40)

(d) Lap impulse valve to its seat, using oil (C). (40)

(e) Note that restriction is clear (0.180 inch), place a new washer on seat for gyro spin nipple; insert impulse valve and screw nipple in place in front plate. **(18)**

Note: When nipple is set up tight, square section of nipple must be lined up at right angles to finished surface on inner side of front plate, in order that holder for nipple may be lined up with screw holes when assembled.

(f) To test impulse valve for leaks, connect nipple to a high-pressure air source, immerse front plate in water, and watch for bubbles (Fig. 267). **(229)**

(g) Replace unlocking bar and slide it back and forth in its slide on mechanism frame and note if excessive play is present. This bar must be a close fit and yet work freely without binding (Fig. 268).

(h) Replace hand trip lever and secure spring. **(92)**

(i) Replace lower rack.

(j) Replace upper and lower bearing caps for hand trip lever and secure with screws. Note that no binding occurs between upper bearing cap and unlocking bar. **(41)**

(k) Replace unlocking rack. Note that rack moves without binding or excessive play.

(l) Replace duration-adjusting element (Fig. 269):

(1) Replace hinge and clamp screw on frame and secure with holding screw. **(49)**

(2) Replace spring rod and spring lever, engaging lever in unlocking rack and on fulcrum pin. Secure with cotter pin in fulcrum pin. **(92)**

(3) Replace washer, spring, and washer in spring case; and replace spring-case nut. **(161)**

(4) Screw spring case into hinge to location, as noted in disassembly.

(5) Tighten hinge clamp screw. **(41)**

(6) Replace nut on spring rod. Tighten nut to remove all lost motion from assembly, and replace cotter pin. **(205A-246, 92)**

(7) Move unlocking rack back and forth. If binding occurs, back off slightly on hinge screw. **(49)**

(m) Assemble bell cranks and locking lever on rock shaft, and note if any play exists between the parts. If play is found, it must be remedied, since play will prevent proper locking. Remove parts from rock shaft.

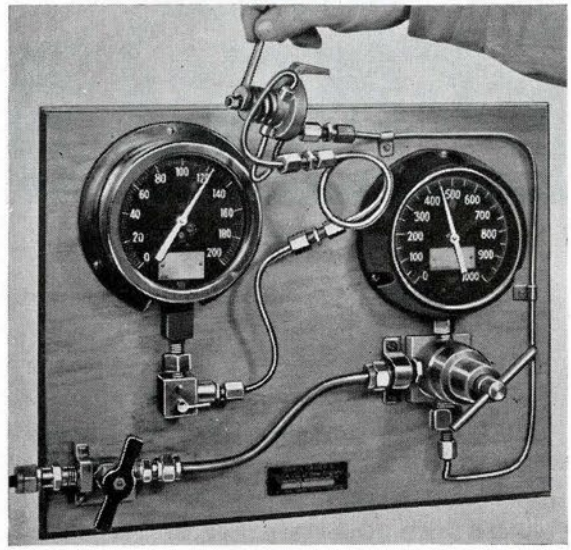

Figure 279

(n) Insert locking lever into recess in mechanism frame, with "X" on locking lever facing toward the bell crank end.

(o) Insert rock shaft into frame, moving locking lever to line up key with keyway. Push rock shaft into place (Figs. 270 and 271).

(p) Insert centering pin into lower rack and make certain that it moves freely without excessive play. Remove centering pin.

Note: If centering pin does not move freely in lower rack, remove burrs and irregularities by stoning. Do not use lapping dust or emery.

(q) Replace upper gear center plate on spinning-shaft sleeve, leaving screws loose. **(41)**

(r) Insert spinning shaft and thrust washer into sleeve. Replace worm wheel and gear, meshing worm wheel with worm on spinning shaft. Install pinion in mesh with small gear on worm wheel.

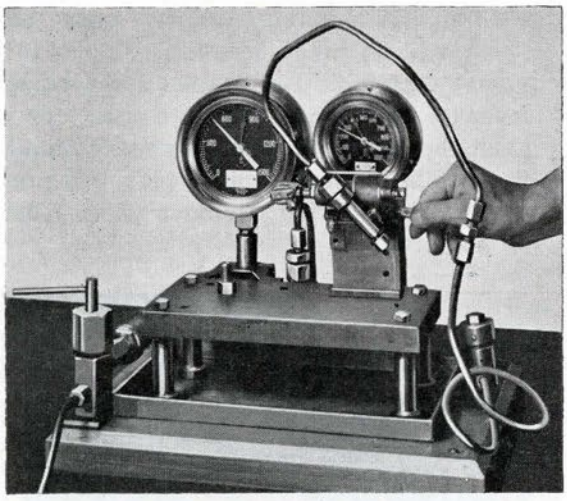

Figure 280

(s) Replace lower gear center plate with centers meshing in gears, and secure with screws (Fig. 272). Remove burrs extending from screw heads. See that cotter pins are installed through gear centers in lower gear center plate. See that spinning shaft moves freely in mesh with gear train. See that all screws are tight. **(41)**

(t) If previously removed, replace spinning gear on controlling sleeve; insert split retaining washer and rivet in place with six small brass rivets. Note that spinning gear moves freely on controlling sleeve after riveting.

(u) Replace (temporarily) controlling sleeve assembly in spinning-shaft sleeve assembly, lining up punch marks on spinning shaft and spinning gear.

(v) Replace (temporarily) upper rack in controlling sleeve and secure with holding screw. **(37)**

Note: Take care not to bend dowel pins.

(w) Test above assembly for freedom of rotary and longitudinal movement. When satisfied that no binding or lost motion exists, remove upper rack and controlling sleeve assembly. **(37)**

(x) Place spinning-shaft sleeve assembly in frame and insert controlling sleeve assembly, lining up punch marks (Fig. 272).

(y) Replace upper rack in controlling sleeve and secure with holding screw. Prick-punch holding screw to prevent it from loosening up (Fig. 273). **(37)**

(z) Replace centering pin.

(aa) Replace front plate assembly, guiding upper rack into slot, and secure with three screws. Replace cotter pin in lower screw. **(41, 92)**

(ab) Replace valve bell crank and secure with washer and nut (Fig. 274). **(141A)**

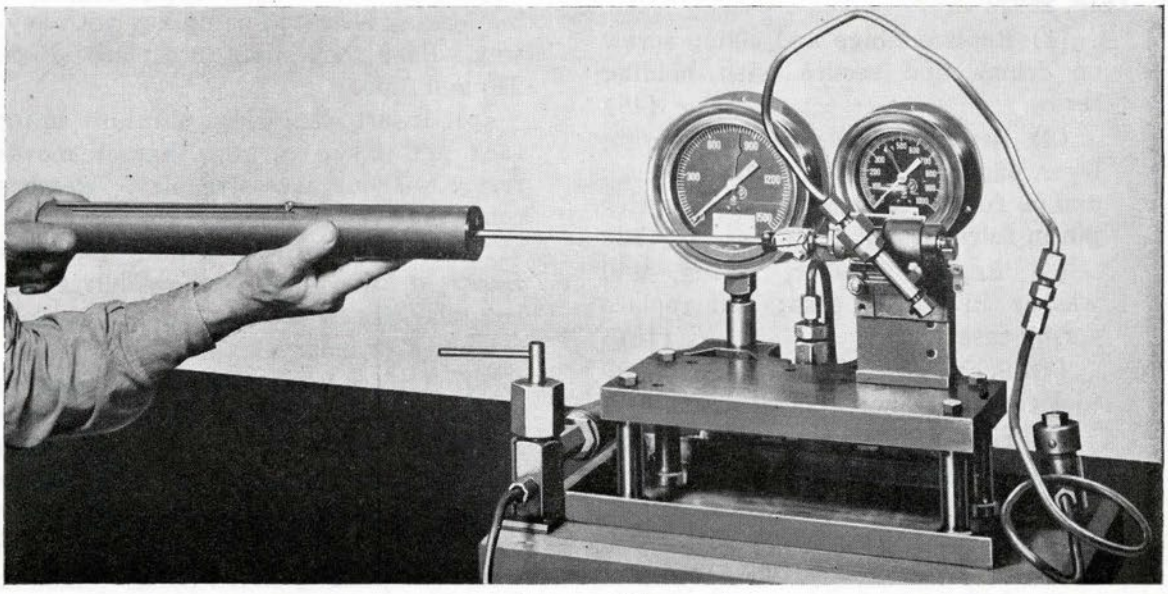

Figure 281

(ac) Push valve bell crank to its extreme after (unlocked) position. Push spinning gear to move spinning-shaft sleeve assembly to its extreme after (unlocked) position. Insert pinion in mesh with upper and lower racks and through slot in valve bell crank. With steel scale, measure distance that spinning gear projects from face of mechanism frame. This distance should not exceed 13/32 of an inch to face of spinning gear. A distance in excess of 13/32 of an inch indicates that pinion gear is improperly meshed in upper and lower racks (Fig. 275). **(WE8)**

(ad) Replace spring bell crank and secure with washer and nut (Fig. 274). **(141A)**

(ae) Replace spring guide pin, with spring, and secure with cotter pin (Figs. 276 and 277). **(WE178, 92)**

(af) Hold spinning gear between copper jaws in vise. Replace washer, and screw spinning turbine in place on spinning shaft (Fig. 277). **(25)**

(ag) Replace nipple holder on spinning-gear frame and secure with two screws (Fig. 278). **(40)**

(ah) Lock and unlock mechanism several times and note that parts move freely without binding and that mechanism unlocks smartly. **(205A-246)**

(ai) Check number of revolutions required to unlock mechanism:

(1) Lock mechanism. **(205A-246)**

(2) Draw a pencil mark on spinning turbine for reference and count number of turns of turbine required to unlock (should be 58 to 62 turns).

(3) If more than 62 turns of turbine are required to unlock mechanism, loosen clamp screw on hinge and turn spring case clockwise until correct number of turns is obtained. If fewer than 58 turns are required to unlock mechanism, turn spring case counterclockwise until correct number of turns is obtained (Fig. 278). **(41)**

(4) After proper adjustment is obtained, tighten clamp screw on hinge. **(41)**

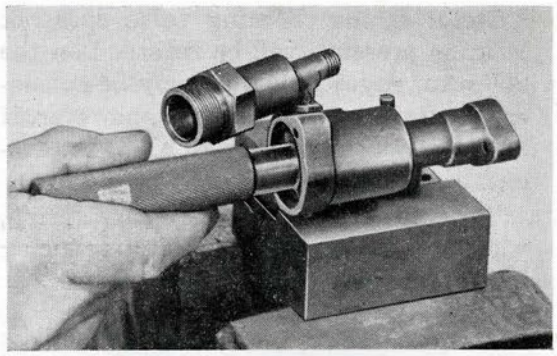

Figure 282

The above completes the overhaul, assembly, and test of the gyro spinning and unlocking mechanism.

J. Gyro Reducing Valve

Note: The gyro reducing valve should be given the following test to facilitate inspection of condition during overhaul.

1. Test prior to assembly:

(a) Connect reducing valve inlet connection to pipe from 1000 p.s.i. gage on Gyro Reducing Valve Testing Panel. **(24)**

(b) Connect reducing valve outlet connection to pipe leading to restriction pet cock and 200 p.s.i. gage. **(24)**

(c) Close restriction pet cock to 200 p.s.i. gage.

(d) Remove lock nut, adjusting nut, washer, and spring from reducing valve. **(48, 155)**

(e) Turn on air, and control pressure at 450 p.s.i on the 1000 p.s.i. gage by means of the control valve.

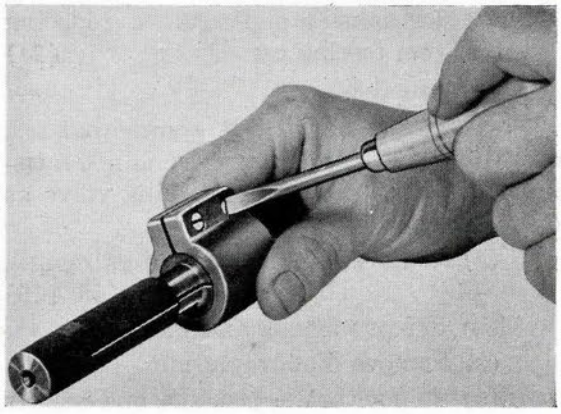

Figure 283

Note: If the reducing valve does not leak, no pressure will be recorded on the 200 p.s.i. gage; the valve may be considered satisfactory on this test, however, if only a small leak (up to 20 p.s.i.) is present.

(f) Close control valve; replace spring, washer, and adjusting nut on reducing valve; and open restriction pet cock.

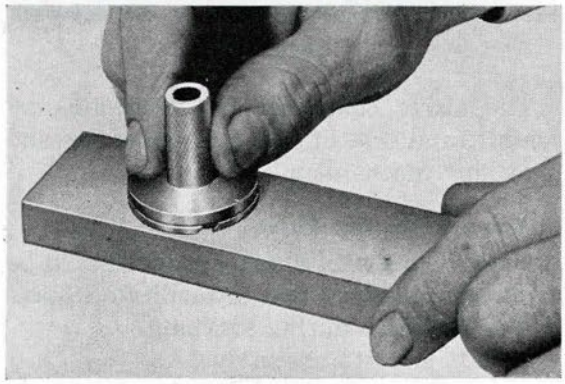

Figure 284

(g) Set up on adjusting nut, and with 400 to 450 p.s.i. on the 1000 p.s.i. gage, adjust the nut until the 200 p.s.i. gage registers 125 p.s.i. (Fig. 279). **(155)**

(h) Shut off air and turn on again several times to ascertain that valve functions properly and that adjustment is correct. Tap reducing-valve body slightly and note if pressure crawls up or down. A properly fitted reducing valve will not be affected by tapping.

(i) Replace and tighten lock nut, holding adjusting nut from turning. **(48, 155)**

(j) Disconnect and remove reducing valve from testing panel. **(24)**

2. Disassemble:

Note: If the above test shows that the operation of the reducing valve is not satisfactory, disassemble the reducing valve as outlined below:

(a) Remove lock nut and adjusting nut. **(48, 155)**

(b) Remove spring and washer.

(c) Remove diaphragm nut. **(25)**

(d) Remove cotter pin, nut, and washer for diaphragm. **(205A-246, 92, 155)**

(e) Remove diaphragm and reducing-valve stem.

3. Overhaul, assemble, and test:

(a) Clean and inspect reducing-valve body, paying particular attention to valve-stem hole. Lap hole if necessary. **(WE177)**

(b) Clean and inspect reducing-valve stem. Note that lapped surface is free of scratches or burrs. If stem is too loose in body, replace by lapping in a new stem. **(WE139)**

(c) Clean, inspect, and renew diaphragm if it shows indication of having been strained.

(d) Place a small amount of lapping compound around seat for diaphragm. Screw diaphragm nut down against this seat and rock tool back and forth, thus removing any high spots which may be found on this seat. Remove nut and wash seats clean. **(25)**

(e) Replace diaphragm:

Note: It is desirable to turn a hardwood stick to the diameter of the valve stem, with one end turned down to fit hole in center of diaphragm.

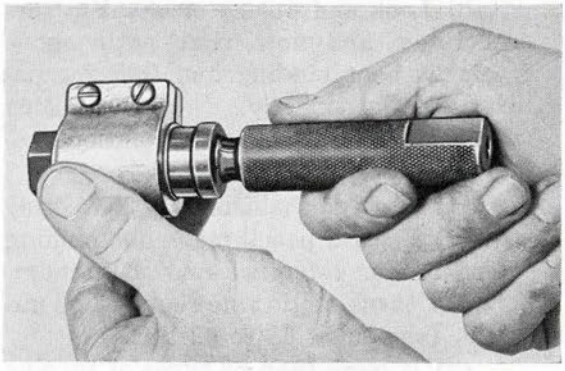

Figure 285

(1) Slip hardwood stick through hole in reducing valve body.

(2) Replace diaphragm on its seat in valve body, holding it central on small end of hardwood stick.

(3) Replace diaphragm nut and set up tight. **(25)**

(4) Remove hardwood stick.

(f) Replace valve stem:

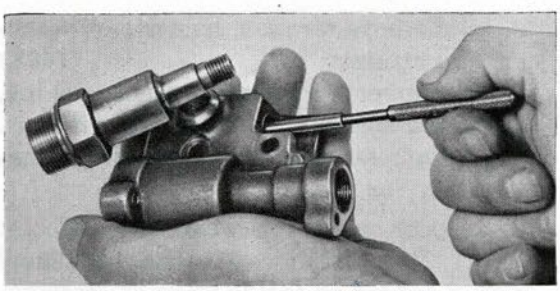

Figure 286

(1) Wipe small amount of oil (D) on the lapped portion of valve stem.

(2) Insert valve stem into valve body.

(3) Secure to diaphragm with washer, nut, and cotter pin. **(205A-246, 155, 92)**

(g) Replace spring, washer, adjusting nut, and lock nut. **(48, 155)**

(h) Test gyro reducing valve (see step J-1).

K. Steering Engine

1. Test prior to disassembly:

(a) Mount steering engine on Leakage Test Stand and connect test lead to it. **(49, 141A)**

(b) Turn on air until high-pressure gage reads 500 p.s.i.

(c) Move valve and take low-pressure gage readings when piston is at each end of the cylinder (Fig. 280). These readings should lie between 250 and 325 p.s.i. and should not differ from one another by more than 20 p.s.i.

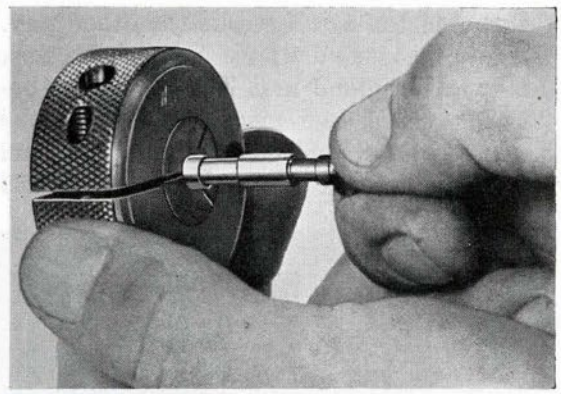

Figure 287

(d) Rotate piston in 90-degree increments, repeating step (c) of test at each of the four rotational positions of the piston.

Note: When rotating the piston, move it back and forth with the valve, so as not to score the cylinder.

(e) Test cylinder head, inlet nipple, strainer fittings, and piston-rod packing gland for leaks, using oil (C).

Note: The piston should always be at the opposite end from that being tested for leaks, so that the end being tested will be under air pressure.

(f) Move valve so that piston moves into the engine cylinder (forward position). Note that there is clearance between the piston fork and the packing-gland nut.

(g) Check length of piston stroke as follows: Measure distance from piston fork to packing-gland nut. Move valve to

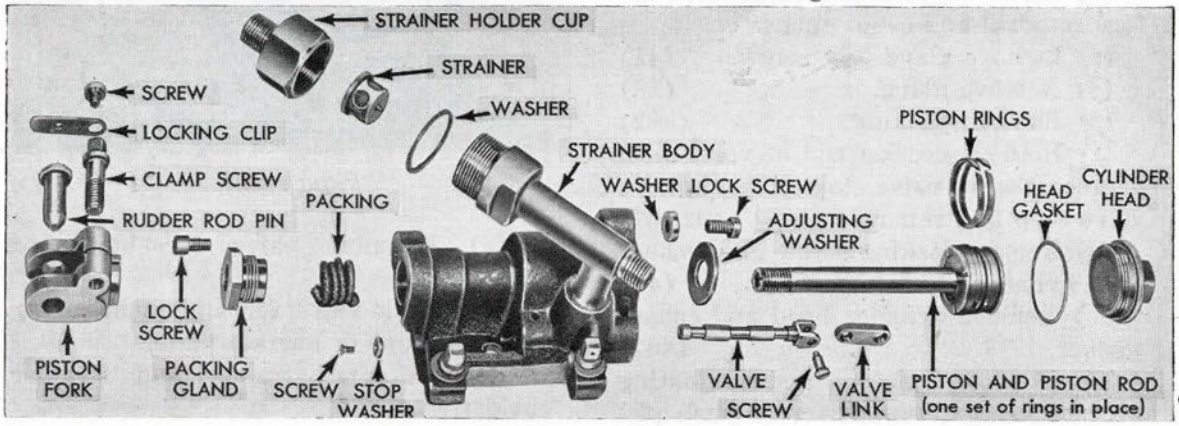

Figure 288

throw piston a full stroke the other way. Again measure distance from piston fork to packing-gland nut. The difference between these two measurements is the stroke and should be between 0.438 and 0.448-inch. **(WE8)**

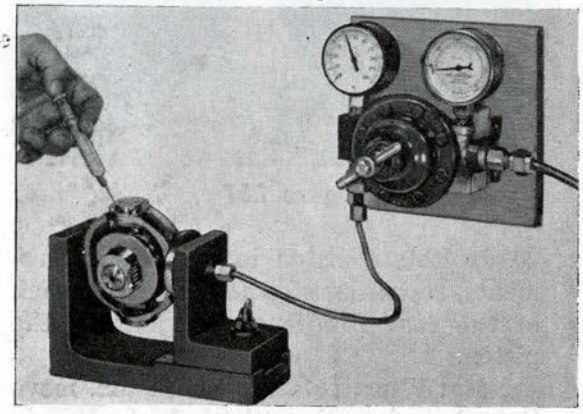

Figure 289

Note: If the stroke is not in the above range, the spacing washer will have to be changed. (See step 4, below).

(h) Turn off air.

(i) Test tightness of packing by using a push balance to move the piston (Fig. 281). The reading should be between 15 and 25 pounds. **(98)**

(j) Disconnect test lead from engine and remove engine from test stand. **(141A, 49)**

The above test is made to facilitate inspection of condition during overhaul.

2. Disassemble engine:

(a) Loosen fork clamp screw. **(49)**

(b) Screw off fork. Scribe position before removal and count turns.

(c) Remove gland lock screw. **(41)**

(d) Remove gland. **(18)**

(e) Remove packing. **(482)**

(f) Hold connection end of valve with pliers; unscrew valve stop screw; remove valve stop and remove valve. **(92, 37)**

(g) Remove locking screw and washer from cylinder head. **(41)**

(h) Remove cylinder head and copper washer. **(407)**

(i) Remove piston and adjusting washer, using screw driver to push piston out of cylinder.

(j) Remove strainer holder cap, washer, and strainer. **(402)**

(k) Immerse all parts, except packing, in grease solvent and blow dry with air.

(l) Immerse new packing in oil (D) until ready for use.

3. Inspect parts for wear and defects:

(a) Note if any scratches or small scores appear on inside walls of steering-engine cylinder.

(b) Examine piston rod for burrs or scratches. Examine piston rings for wear; piston rings should show even wear throughout their convex surfaces. There should be no tendency for rings to bind or stick in grooves; butt ends should be free, with no noticeable clearance.

(c) Observe butt clearance by inserting piston with rings in cylinder, noticing rings as they enter cylinder; if butt clearance is noticeable by eye, the rings are worn too much and should be replaced. **(213)**

(d) Examine valve hole for burrs or scratches.

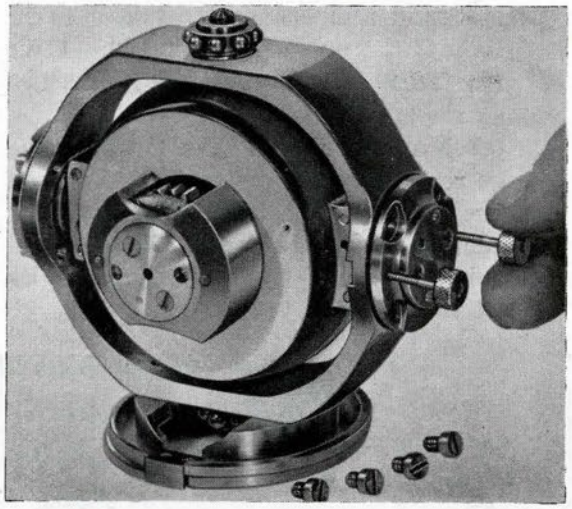

Figure 290

(e) Examine valve for burrs or scratches.

(f) Check valve for alignment, using straight edge or surface plate.

(g) Examine strainer and strainer holder.

*4. If engine stroke is not correct as noted

in step 1-(g) above, remedy by facing off or renewing adjusting washer.

*5. Lap out any irregularities, scratches, or burrs found in engine cylinder, using lapping compound only if necessary. Lap to final size, using oil (C) (Fig. 282). **(WE153, 41)**

*6. Lap out any burrs or scratches found on piston rod, using lapping compound sparingly if necessary. **(WE204, 41)**

*7. Fit new piston rings:

(a) Remove worn rings from piston.

(b) Adjust male lap, WE153, to fit cylinder snugly. **(WE153, 41)**

(c) Measure diameter of WE153 after adjusting to fit cylinder. **(WE6, WE153)**

(d) Adjust WE153 so that it is 0.002 inch larger in diameter than bore of cylinder. **(WE153, 41, WE6)**

(e) Insert WE153 into female lap, WE154, and adjust female lap, WE154, to fit WE153 snugly (Fig. 283). **(WE153, WE154, 41)**

(f) Select new rings and see that they are free from burrs. If possible, select rings that will fit WE154 without dressing down the butt ends. **(WE154)**

Note: If necessary to remove metal on butt ends to fit rings into lap, WE154,

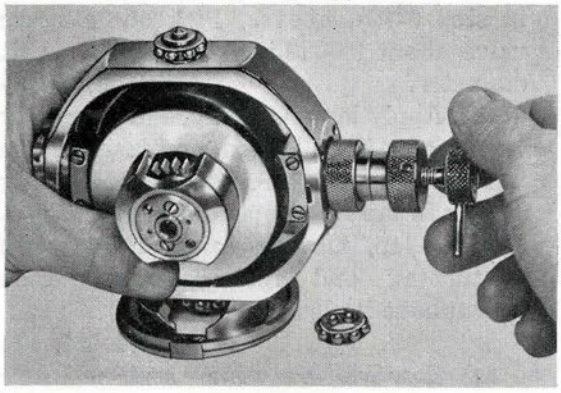

Figure 291

use a small flat file, and finish by stoning. Remove burrs after filing and stoning.

(g) Measure width of rings. **(WE5)**

Note: The average ring before fitting will measure about 0.100-inch.

(h) Slip rings, one at a time, over lap holder, WE156, and rub down to a width of 0.096-inch against a piece of No. 0 emery cloth laid on a smooth and level surface. **(WE156, WE5)**

(i) Finish lapping rings against smooth side of combination oil stone (Fig. 284), trying rings in grooves on piston until a

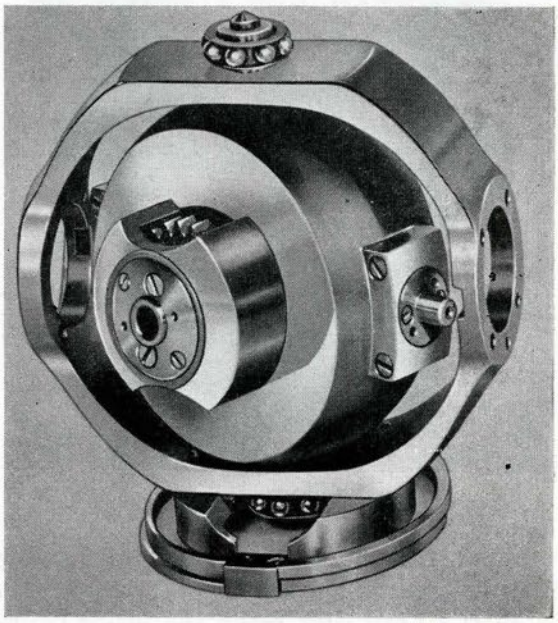

Figure 292

snug fit without binding is obtained. **(WE156)**

(j) After lapping, wash piston and rings thoroughly with a suitable grease solvent and blow dry with air.

(k) Place all rings in female lap. **(WE154)**

(l) Remove clamp bolt, washer, and sleeve on lap-plug holder, WE155; insert this tool through piston rings in WE154; slip washer over end of WE155 and secure tight with clamp bolt. **(WE154, WE155, 144)**

(m) Remove WE155 with rings, and examine all rings to see that butt ends are closed together.

(n) Lap rings in WE154, using the medium-fine grade of compound (Fig. 285). Gradually tighten up on lap until rings are 0.001-inch larger in diameter than bore of cylinder. **(WE154, WE155, WE6, 41)**



Figure 293

(o) Change to fine grade of lapping compound and finish lapping rings with oil (C) until they reach the inside diameter of the cylinder.

(WE154, WE155, WE6, 41)

Note: Remove lapplug holder, WE155, from WE154 occasionally during lapping and note if entire outside surface of each ring contacts lap. If there is any doubt about a ring not lapping out, it is best to replace such ring before proceeding any further, as the whole set must be finished lapped together.

(p) After rings have been lapped to size of cylinder, wash clean with oil (C) and try WE155, with rings in cylinder. If rings fit too snugly, do not attempt to force them into cylinder, but replace in WE154 and continue to lap and try again until fit is obtained.

(WE154, WE155, 213)

(q) Remove rings from WE155; wash thoroughly with grease solvent and assemble them on piston. **(WE155, 144)**

*8. Lap valve hole in engine body:

(a) Adjust male lap, WE125, to size of valve hole in body. **(WE125)**

Note: In making this adjustment, great care must be taken not to mar end of lap. Using a piece of copper stock having a 3/16-inch hole, line up end of lap in this hole and tap lap handle lightly with a small bronze hammer, trying lap in hole for valve until final adjustment is obtained.

(b) If any burrs or scratches are found in valve hole, use a small quantity of fine lapping compound, applying evenly over surface of lap. **(WE125)**

Note: In lapping, move lap with a turning and reciprocating motion over total length of hole to obtain a uniform diameter throughout its length. Do not lap more than necessary to remove burrs and scratches.

(c) Carefully wash lapping material off lap and out of hole with a grease solvent and blow out carefully with low-pressure air.

(d) Lap hole with oil (C) until it shows a well polished surface (Fig. 286).

(WE125)

(e) Wash hole and lap with grease solvent and blow dry with low-pressure air.

*9. Fit new valve:

(a) Measure diameter of lap, WE125, after finish-lapping hole in body, as done in step 8-(d), above. Pick out a spare valve about 0.0025-inch larger than this diameter. **(WE125, WE5)**

(b) Apply lapping compound sparingly on surfaces to be lapped, and insert valve in female lap, WE126. Regulate adjusting screws in lap for proper friction and proceed to lap, moving valve in lap with a turning and reciprocating motion throughout its length (Fig. 287).

(WE126, 41)

(c) Remove, examine, and measure diameter occasionally during lapping. Change to finest grade of lapping compound when valve measures 0.0005-inch large, and lap down to size.

(WE126, WE5, 41)

(d) Wash compound from lap and valve with grease solvent and blow dry with air.

(e) Finish lapping to a polish with oil (C). **(WE126)**

Note: The valve **must** be as nearly perfect a fit in body as is possible to get, without any appreciable friction when finished.

(f) After lapping, wash lap and valve with grease solvent and blow off with low-pressure air.

10. Assemble engine (Fig. 288):

(a) Oil (C) parts, except packing.

(b) Place butt ends of piston rings 180 degrees apart on piston and insert piston and adjusting washer into cylinder, being careful not to mar parts. (213)

(c) Replace and tighten cylinder head and copper washer. Renew washer if necessary. (407)

(d) Replace locking screw and washer for pushing packing into place.

(e) Renew packing, being careful not to mar piston rod by using any sharp tools for pushing packing into place.

(f) Install packing gland and set up hand-tight.

(g) Screw piston fork on piston to scribe mark, using same number of turns as on disassembly. Replace and tighten clamp screw. (49)

(h) Tighten up on packing gland gradually, turning and pushing piston back and forth by hand to work packing around piston rod. (18)

(i) Replace gland lock screw. (41)

(j) Insert valve in engine body and secure with valve stop and stop screw. (92, 37)

(k) Make certain strainer is clean and replace it in strainer holder.

(l) Replace washer and strainer holder cap. Tighten cap. (402)

11. Test assembled steering engine (see Step K-1).

The above completes the disassembly, overhaul, assembly, and test of the steering engine.

L. Gyroscope Mk 12-3—Disassemble

1. Test gyroscope for leaks prior to disassembly:

(a) Place gyro in Gyro Balancing Fixture. Insert cam-plate end in bearing holder having air connection.

(b) Connect low-pressure air line to nipple in fixture. (141A)

(c) Turn on air to fixture and adjust to a pressure of 125 p.s.i.

(d) Test side bearings for leaks around edges of locking discs, around screw heads in locking discs, and around edges of side bearing sleeves (Fig. 289).

Note: Slight leaks are permissible.

(e) Turn off air; disconnect air lead and remove gyro from fixture. (141A)

2. Remove locking discs for side bearings:

(a) Remove locking disc screws and locking discs. (37)

Note: Take care not to injure paper gaskets beneath locking discs.

(b) Inspect threads on sleeves for rust.

(c) Clean threads, but do not move position of bearings.

*(d) If bad leaks were observed around screw heads in locking discs in step L-1, lap screw heads to their seats in locking discs, using oil (C). (37)

(e) Replace locking discs and gaskets and secure with screws. (37)

Note: If bad leaks were observed around edges of locking discs in step L-1, renew gaskets.

3. Remove side bearing-sleeve assemblies:

(a) Remove screws which secure sleeve assemblies to outer gimbal ring. (41)

(b) Note bench marks on sleeves and outer gimbal ring. Remove sleeves, using two No. 91 tools simultaneously (Fig. 290). (91)



Figure 294

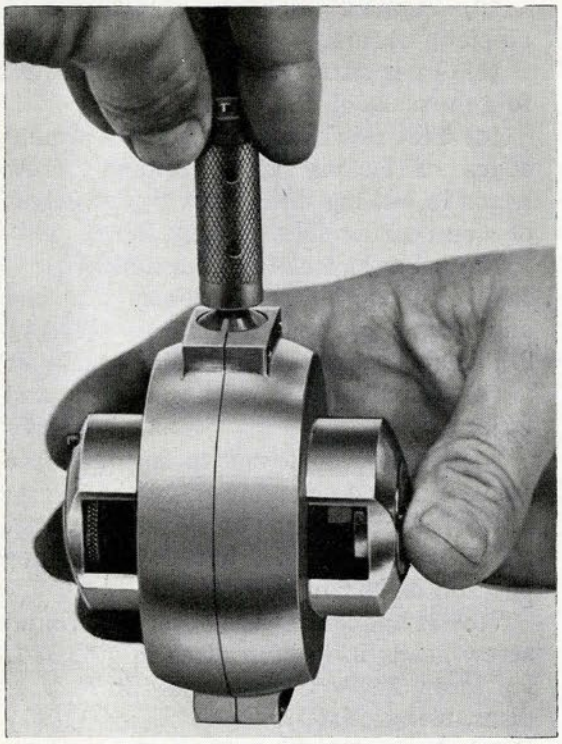

Figure 295

(c) Place each sleeve assembly, with holding screws, in separate compartment of cleaning stand.

Note 1: See that holding screws are so placed that they can be reassembled in the same holes they occupied before disassembly.

Note 2: When removing sleeve assemblies, take care not to damage paper gaskets.

4. Pry balls and retainers off inner races on inner gimbal-ring centers, using two hardwood sticks, preferably orange wood.

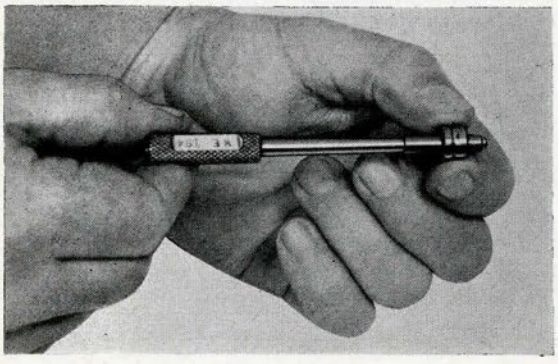

Figure 296

Place in correct compartment of cleaning stand.

5. Remove inner races from inner gimbal-ring centers by clamping flanged end of tool in the ball paths of inner races (Fig. 291). Place in correct compartment of cleaning stand. **(416)**

Note: Commercial name of inner races is stamped on their outboard faces.

6. Remove inner gimbal ring and wheel assembly:

(a) Rotate inner gimbal ring so that it is in same plane as outer gimbal ring.

(b) Remove inner gimbal ring and wheel assembly by rotating it so that gimbal-ring centers pass through slots in outer gimbal ring (Fig. 292).

7. Disassemble inner gimbal ring and wheel assembly:

(a) Remove holding screws for inner gimbal-ring halves. **(37)**

(b) Scratch assembly marks on flanges of centers and inner gimbal ring.

(c) Remove holding screws for each inner gimbal side bearing center. **(37)**

(d) Remove centers and gaskets from inner gimbal ring. Place in proper compartment of cleaning stand. **(91)**

(e) Start inner gimbal-ring halves apart with lifting screws. **(91)**

(f) As ring parts, grasp geared hub and force it up into the wheel bearing that is uppermost, to prevent balls of wheel from falling out (Fig. 293).

(g) When halves part, reverse position of upper half.

(h) Remove gyro wheel.

(i) Remove balls from wheel bearings, placing them in proper compartment of cleaning stand.

8. Remove balls and retainers from outer gimbal-ring top and bottom centers, by prying them off with hardwood sticks. Place balls and retainers in proper compartment of cleaning stand.

9. Remove inner races from outer gimbal-ring top and bottom centers. Place in proper compartment of cleaning stand. **(416)**

*10. Remove top and bottom centers from outer gimbal ring:

(a) Remove holding screws. **(37)**

(b) Remove centers and gaskets. Place them in proper compartment of cleaning stand. **(91)**

*11. Remove cam plate from outer gimbal ring by removing four holding screws. **(37)**

Note: It should never be necessary to remove the cam plate from the outer gimbal ring, except if bent out of alignment by accidental dropping of gyro.

*12. Remove wheel bearings from inner gimbal ring:

(a) Remove screws for locking discs. **(37)**

(b) With locking discs still engaged in wheel bearings, remove wheel bearings with spanner wrench. Place in proper compartment of cleaning stand. **(80)**

*13. Remove adjusting plates from side bearing-sleeve assemblies:

(a) Remove screws for locking discs. **(37)**

(b) With locking discs still engaged in adjusting plates, remove adjusting plates with spanner wrench. Place parts in proper compartment of cleaning stand. **(204)**

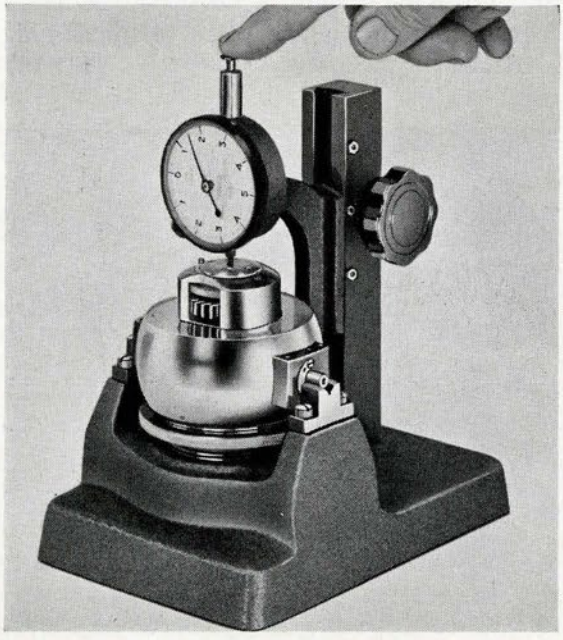

Figure 297

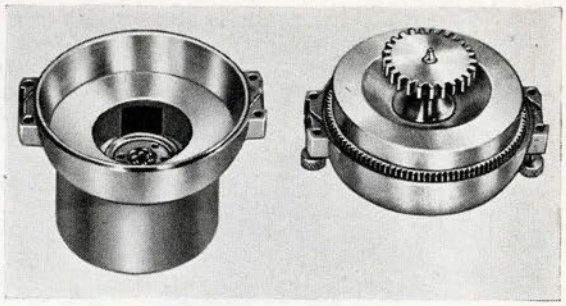

Figure 298

*14. Remove outer races from sleeves and place in proper compartment of cleaning stand.

*15. Remove bottom bearing assembly from gyro bottom plate (head):

(a) Back out spring plug on adjusting body. **(155)**

(b) Remove spring and spring button.

(c) Clean spring and button; oil (C) and replace in adjusting body.

(d) Replace spring plug in adjusting body and tighten. **(155)**

(e) Remove outer race from bottom bearing holder.

(f) Remove cotter pin from lock screw; remove lock screw and adjusting body from bottom bearing holder. **(92, 41, 204)**

(g) Remove cotter pin from keep screw; remove keep screw and bottom bearing holder from bottom plate. **(92, 41, 463)**

*16. Remove outer bearing race (in holder in gyro top plate) for top bearing. **(WE192)**

Note: Outer bearing race can and should be removed, if necessary, without removing top bearing holder from gyro top plate.

*17. Remove top bearing holder and washer from gyro top plate. **(WE165)**

Note: Should it be necessary to remove top bearing holder from gyro top plate, care must be taken that spacing washer under holder is not misplaced before assembly, as this washer is made the correct thickness for proper adjustment of gyro in gyro pot.

The above completes the disassembly of the Gyroscope Mk 12-3.



Figure 299

M. Gyroscope Mk 12-3—Overhaul, Assembly, and Test

*1. Bottom bearing assembly:

(a) Clean, inspect, oil (A), and replace bottom bearing holder in bottom plate. Secure with keep screw and cotter pin. **(463, 41, 92)**

(b) Clean, inspect, oil (A), and replace adjusting body in bottom bearing holder. Secure with lock screw and cotter pin. **(204, 41, 92)**

(c) Clean, inspect for wear and pits, oil (A), and replace outer race in bottom bearing holder.

*2. Top bearing holder:

(a) Clean and inspect top bearing holder, making certain that extender is not clogged or distorted.

(b) Clean and inspect spacing washer.

(c) Oil (A) and replace spacing washer and top bearing holder in gyro top plate and tighten. **(WE165, WE165B)**

*3. Clean, inspect for wear and pits, oil (A), and replace outer race for top bearing.

4. Test top bearing holder for leaks:

(a) Connect air line to nipple in gyro pot. **(24)**

(b) Place nozzle, BuOrd Dwg. 173730, with air line, over extender in top bearing holder to carry air away from extender.

(c) Turn on air (125 p.s.i.).

(d) Test for leaks around edges of top bearing holder, using oil (A).

(e) Remove nozzle and air line from extender, and disconnect air line from nipple in gyro pot. **(24)**

(f) If leaks are present, remove parts and remedy.

*5. Cam plate:

Note: If it was necessary to remove cam plate from outer gimbal-ring because of distortion, proceed as follows:

(a) Place cam plate on surface plate and note position of bend.

(b) Tap plate back into alignment with soft lead hammer.

(c) Check alignment by placing straight edge in various positions on top of cam plate. If light shows where straight edge contacts cam plate, further straightening will be necessary.

(d) Replace cam plate on outer gimbal ring and secure. **(37)**

(e) Place one side bearing end of outer gimbal ring on surface plate.

(f) With Universal Indicator, measure height from surface plate to upper side of cam. **(WE10)**

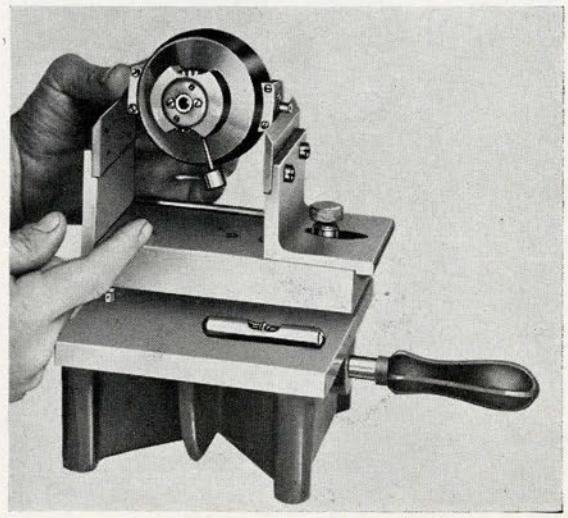

Figure 300

(g) Reverse outer gimbal ring on surface plate so that it rests on opposite side bearing end.

(h) With Universal Indicator, again measure height from surface plate to upper side of cam. **(WE10)**

Note: Measurements taken in steps (f) and (h) should be the same, within 0.001-inch. If they are not within this allowable tolerance, perform steps (i) to (m) below:

(i) Remove holding screws for cam plate and remove cam plate. **(37)**

(j) Drill out dowels in outer gimbal ring; tap and plug holes, using ⅛-inch-40 plugs. File plugs flush.

(k) Proceed to measure as in steps (d), (e), (f), (g), and (h), moving cam plate until within tolerance given in **Note** under step (h).

(l) Drill new holes for dowels with cam plate secured in place on outer gimbal ring.

(m) Push dowels into place in their new locations.

*6. Centers for outer gimbal ring:

(a) Clean and inspect centers and gaskets.

(b) Lap small diameters of centers. **(WE195)**

(c) Lap flats for centers on outer gimbal ring. **(WE166)**

(d) Lap flat surfaces of centers. **(WE201)**

(e) Lap centers to flats on outer gimbal ring, using oil (C). Wash parts after lapping.

(f) Put a drop of oil (A) on each paper gasket. Replace gaskets and centers on outer gimbal ring and secure with holding screws. **(37)**

*7. Side bearing sleeve assemblies:

(a) If bad leaks were found around edges of side bearing sleeves in step L-1, lap sleeves (Fig. 294); then lap to outer gimbal ring, using oil (C). Wash parts thoroughly after lapping. **(201A, WE193)**

(b) Clean, inspect, and oil (A) adjusting plates.

(c) Clean, inspect, oil (A), and assemble gaskets and locking discs to adjusting plates.

(d) Screw adjusting plates into sleeves. Secure with holding screws. **(204, 37)**

(e) Clean, inspect for wear and pits, oil (A), and replace outer races in side bearing sleeves.

8. Test top center of outer gimbal ring for leaks:

(a) Replace side bearing sleeve assemblies and gaskets in outer gimbal ring, turned 90 degrees from normal position, to blank off alignment of holes for air to side bearings. **(483, 41)**

(b) Install test nozzle, BuOrd Dwg. 173730, in top center; hold against center and admit air until pressure in gimbal ring is 90 p.s.i.

(c) Test for leaks with oil (A) around edges, around holding screw, and over lifting holes of top center.

(d) Remove test nozzle and turn off air.

(e) Remove side bearing sleeve assemblies. **(41, 91)**

(f) If leaks were noted around top centers, remove centers, lap centers to outer gimbal-ring, lap screw heads into centers, replace centers, and test again.

*9. Wheel bearings for inner gimbal ring:

(a) Clean and inspect wheel bearings.

(b) Lap bearing races in wheel bearings. Wash after lapping. **(WE168, WE171)**

(c) Lap threads of wheel bearings. Wash after lapping. **(WE176)**

Note: When renewing a wheel bearing, the new bearing should be balanced on the most accurate scales available to insure that it is the same weight as the old bearing. Where necessary, take weight off new bearing by grinding. The gyro bearing-polishing machine is furnished for this purpose.

10. Centers for inner gimbal rings:

(a) Clean and inspect centers and gaskets.

*(b) Lap small diameters of centers. **(WE195)**

*(c) Lap flats for centers on inner gimbal ring (Fig. 295). **(WE166)**

*(d) Lap flat surfaces of centers. **(WE201)**

*(e) Lap centers to flats on inner gimbal ring, using oil (C). Wash parts after lapping.

11. Inner gimbal-ring halves:

(a) Clean and inspect inner gimbal-ring halves, paying particular attention to joint.

*(b) Stone off burrs on joint.

*12. Replace wheel bearings in inner gimbal-ring halves:

(a) Clean, inspect, oil (A) wheel bearings; and assemble locking discs to bearings.

(b) Replace wheel bearings and locking discs in inner gimbal-ring halves. Screw in wheel bearings. **(80)**

(c) Replace and tighten screws for locking discs. **(37)**

13. Inner races for inner and outer gimbal-ring centers:

(a) Clean and inspect inner races for wear, pits, and rust.

*(b) Lap holes in inner races (Fig. 296). **(WE194)**

14. Measure height of pivots on gyro wheel:

(a) Clean and inspect gyro wheel. Make certain that pivots are free from rust, pits, or dents.

Note: Pivots having dents cannot be replaced in service. New wheel should be installed and old wheel sent to Naval Torpedo Station, Newport, for overhaul.

(b) Clean ring of Gyro Centering Fixture.

(c) Set gyro wheel on ring of fixture.

(d) With dial indicator, measure height of pivot in wheel (Fig. 297).

(e) Reverse position of gyro wheel in ring and measure other pivot. The difference in readings should not exceed 0.0005-inch.

(f) If the difference exceeds the tolerance given above, stone high pivot.

(g) Repeat the measuring procedure and stoning until both readings are within the tolerance given in step (e).

15. Assemble gyro wheel and inner gimbal-ring halves:

(a) Clean and inspect inner gimbal-ring halves, paying particular attention to the joint.

(b) Measure wheel bearing balls for diameter. Balls must be of same diameter and free from rust, pits, or flat spots. **(WE5)**

(c) Clean balls and place them in proper races in wheel bearings. Using scriber, turn balls in their races and check for freedom of movement. **(WE172)**

(d) Oil balls with two drops of oil (A), using needle syringe.

(e) Place wheel in position in one bearing of gimbal half (Fig. 298), reverse position of wheel and gimbal half, holding wheel against bearing to prevent balls from falling out. See that bench marks on wheel coincide with bench mark on gimbal.

(f) Fit inner gimbal halves together.

(g) Replace holding screws for inner gimbal-ring halves. **(37)**

(h) Replace inner gimbal-ring centers and paper gaskets. See that scribe marks coincide. Put drop of oil (A) on each gasket.

(i) Replace holding screws for centers. **(37)**

(j) Make certain that balance nut is set at position of static balance: 1½ turns in from hard-up position against the end bearing boss.

16. Center wheel in inner gimbal ring:

(a) Set inner gimbal-ring centers in V-blocks of Gyro Centering Fixture.

(b) Raise the adjustable ring on fixture until it just makes contact with lower gimbal half, but does not raise the centers off the V-blocks. (This ring serves to stabilize the assembly during centering operations).

(c) Lower dial-indicator point through locking disc and make contact with gyro wheel pivot (Fig. 299).

(d) Set indicator reading to exactly zero.

(e) Reverse the position of the inner gimbal ring and wheel assembly in the centering fixture and take a reading on the gyro-wheel pivot with the indicator. Record this reading.

(f) The difference between the two readings shows to what degree the wheel is off center with relation to the inner gimbal ring.

(g) Suppose the reading on the dial indicator was greater on the locking end. This would indicate that the locking-end wheel bearing would have to be moved toward the center, while the free-end bearing would be moved outward the same amount (see steps (h) to (k), below).

(h) With a pencil, scribe a line on the free-end locking disc and inner gimbal ring. Loosen screws and move wheel bearing outward a small amount. Tighten screws. **(37, 80)**

(i) Repeat the procedure for the locking-end wheel bearing, but move bearing inward. **(37, 80)**

(j) Take measurements as in steps (c), (d), (e), and (f), above.

(k) Repeat procedure outlined above until both readings are identical. The wheel is then centered.

17. Check clearance of gyro wheel:

(a) Install tool number 414A on spur gear of gyro wheel; hold tool up against side of inner gimbal ring; and then release it (Fig. 300).

(b) The number of full oscillations should be 4½ to 5. This gives the gyro wheel a clearance of approximately 0.001-inch. **(414A)**

Note: A full oscillation is a swing away from, plus a swing toward, the starting point.

18. Test inner gimbal ring and gyro wheel assembly for static balance:

(a) Set Knife Edge Fixture on surface plate and level plate both ways.

(b) Put inner gimbal centers on knife edges near one edge and roll unit to center. (This prevents nicking of edges and centers).

(c) With balance nut 1½ turns in from hard-up position, check static balance of inner gimbal unit. It should remain in any position with no tendency to drop, if in static balance (Fig. 301).

(d) If not in static balance, the amount of unbalance can be found in the following way: Put a small amount of putty or molding wax on the light end of the gimbal ring, adding weight to this end until static balance is obtained.

(e) Remove the locking disc from the heavy end and rub outside of disc against a piece of medium-coarse emery cloth. Amount of weight to be removed should be judged by the amount of putty in step (d), above, necessary to put gyro in static balance. Be careful not to remove too much weight at one time. **(37)**

(f) Fasten the locking disc in place and again determine the amount of unbalance with putty. Repeat the procedure in step (e), above, until a point of static balance is reached. **(37)**

19. Replace inner gimbal ring and wheel assembly in outer gimbal ring:

(a) Replace inner gimbal ring and wheel assembly in outer gimbal ring by reversing procedure outlined in step L-6.

(b) Oil centers on inner gimbal ring with two drops of oil (A), using needle syringe.

(c) Replace inner races on inner gimbal-ring centers. Force races all the way on, making certain that commercial markings are outboard.

(d) Clean, inspect, oil (A), and replace balls and retainers on inner races.

(e) Replace paper gaskets and sleeve assemblies with locking discs. Put a drop of oil (A) on each gasket. Secure with screws. (483, 41)

20. Clean, inspect, oil (A), and replace inner races, balls, and retainers on top and bottom centers of outer gimbal ring.

21. Center inner gimbal unit in outer gimbal ring.

(a) Install gyro assembly in Gyro Balancing Fixture. Allow sufficient clearance between bearings to rotate gyro freely, and tighten movable end of fixture.

(b) Loosen screws holding locking discs on each side-bearing sleeve assembly. (37)

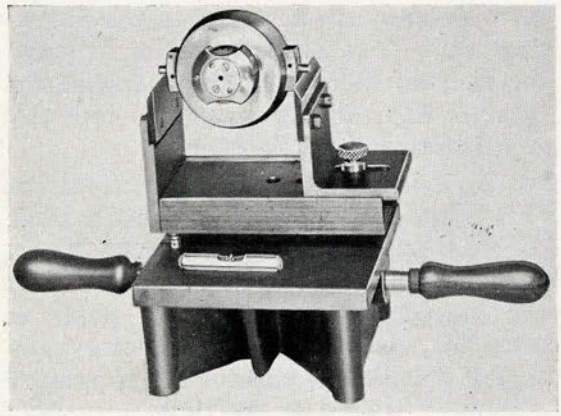

Figure 301

(c) Turn each side bearing clockwise until just hand-tight (Fig. 302). Tighten screws for locking discs. (37)

(d) Hold one side of outer gimbal ring slightly below the level of the other and allow it to fall. Note the rate of fall.

(e) Repeat the procedure for the other side.

(f) If one side falls faster than the other, it is the "Heavy" side. Scribe a line on both locking discs and loosen holding screws. Move the side bearing away from the center on the light side and the same amount toward the center on the heavy side. Tighten holding screws. (37, 204)

(g) Repeat the procedure in steps (d) and (e).

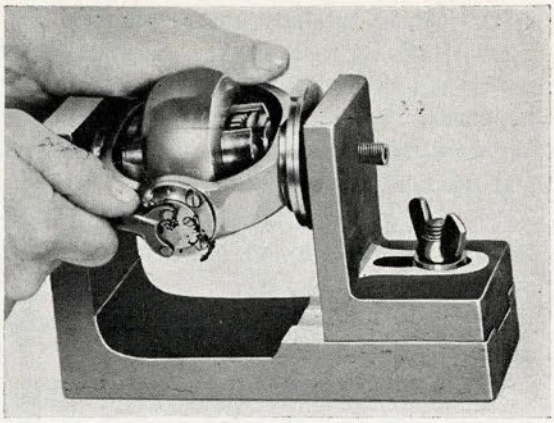

Figure 302

(h) If the rate of fall continues to be different, repeat above procedures by trial and error until the speed of fall is the same for both sides. At this point the inner gimbal-ring assembly is centered in the outer gimbal ring.

22. Check end play of side bearings:

(a) Set gyro assembly on Side Bearing Clearance Testing Fixture and determine clearance (Fig. 303).

(b) Side bearings as adjusted in step 21, (c), will have no clearance at this point.

(c) Scribe a pencil line on both locking discs for side bearings and loosen holding screws. (37)

(d) Turn side bearings outward the same amount on both sides and tighten holding screws. (37)

(e) Using tool (SG 6468), bring both outer bearing races up against adjusting plates (Fig. 304).

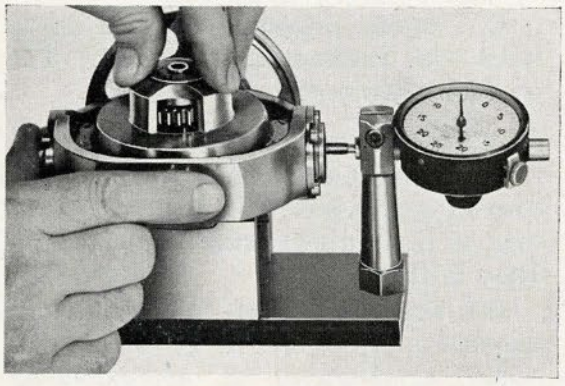

Figure 303

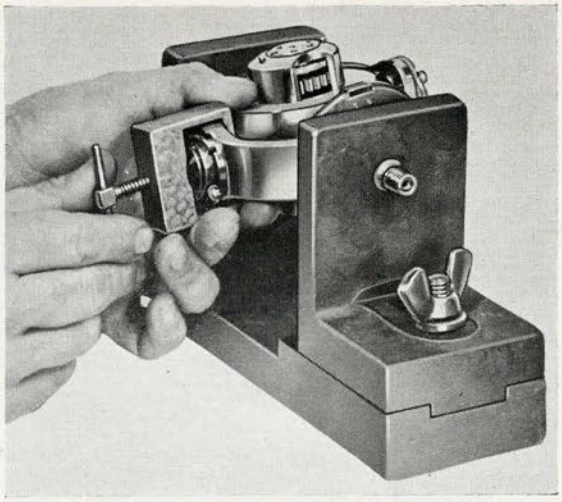

Figure 304

(f) Repeat step (a), above. Clearance must be 0.005-inch.

(g) If the clearance is less than 0.005-inch, repeat the procedure given above until the proper clearance is obtained.

(h) If the clearance is greater than 0.005-inch, side bearings must be turned inward by the same amount until the proper clearance is obtained. **(37, 204)**

23. Retain gyro in fixture and test side bearings for leaks. [See step L, 1 (b), (c), (d), and (e).]

The above places the gyro in static balance; further tests with the gyro assembled in its mechanism may be made in the Gyro Adjusting Stand, if available. See step H.

Chapter 8—Section 9

TAIL CONE ASSEMBLY

A. Disassemble

Note: For removal of tail from afterbody, see Section 3 of this chapter. For replacement of tail on afterbody, see Section 10.

1. Remove screws and outboard bearings for depth rudders. **(39)**

2. Pull depth rudders out of yoke. Remove yoke and rudder adjusting rod.

3. Remove screws and outboard bearings for steering rudders. **(39)**

4. Pull steering rudders out of yoke. Remove yoke and rudder adjusting rod.

5. In torpedoes which do not have the improved tail lubricating system, remove grease plug and washer from tail cone. **(13-14)**

6. Remove screws and bearing from tail cone. **(40)**

7. Remove cotter pins, washers, and adjusting rods from yokes. **(72)**

The above completes the disassembly of the tail cone assembly.

B. Overhaul and Assembly

1. Wash all parts thoroughly with a suitable grease solvent and blow dry with air.

2. Check alignment of depth rudder yoke (Fig. 305). **(WE218)**

3. Check alignment of steering rudder yoke. **(WE219)**

4. Work threads of adjusting eyes into threads of rudder adjusting rods with oil (C) until they move easily by hand.

5. Inspect and replace rudder adjusting rods on yokes; replace washers and secure with cotter pins. **(72)**

6. Check alignment of tail blades, using tail square (Fig. 306).

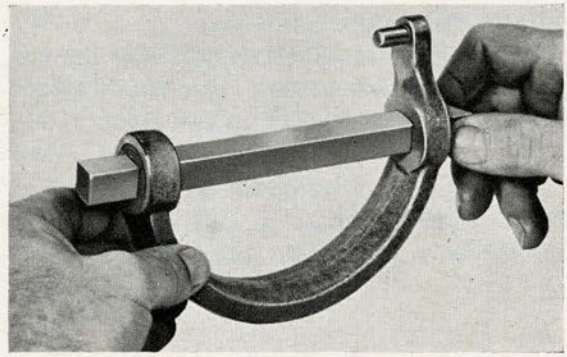

Figure 305

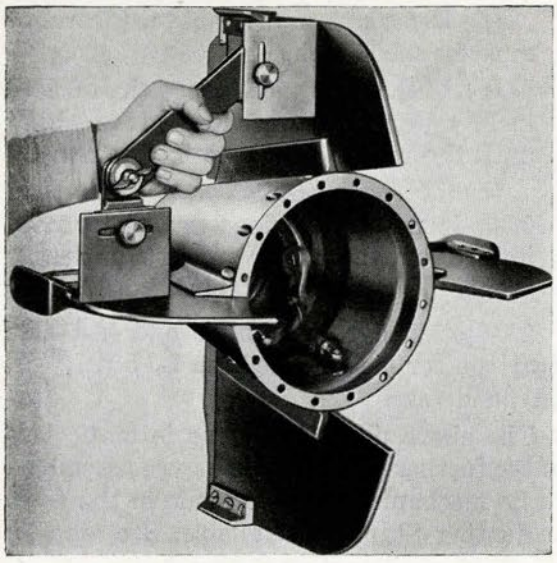

Figure 306

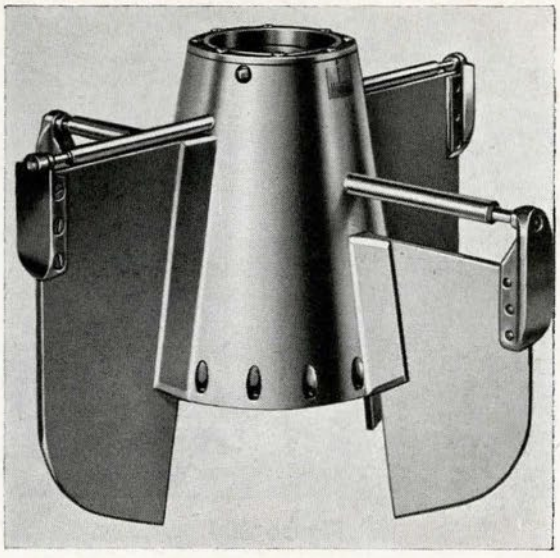

Figure 307

7. Check alignment of rudder bearings (Fig. 307).

(a) Replace one steering rudder outboard bearing and one depth rudder outboard bearing on tail blades and secure each with three screws. **(39)**

(b) Insert aligning tools into rudder bearings in tail cone. **(WE215, WE216)**

(c) Replace remaining two outboard bearings and secure each with three screws. **(39)**

(d) Aligning tools should slide and turn in bearings without binding.

(e) After satisfactory alignment has been made, remove holding screws, outboard bearings, and aligning tools. **(39)**

8. Make certain that holes in tail bearing are clear, and replace bearing in tail cone. Secure with eight screws. **(40)**

9. In torpedoes which do not have the improved tail lubricating system, replace washer and grease plug in tail cone. **(13-14)**

10. Try rudder yokes for fit between rudder inboard bearings in tail cone. There should be a minimum total clearance of 0.030-inch between yokes and inboard bearings.

11. Inspect steering rudders for bends or twists, and straighten if necessary. Replace yoke (with rudder adjusting rod), steering rudders, and outboard bearings. Secure outboard bearings with screws. **(39)**

12. With rudder yoke central, check end clearance between steering rudder spindles and outboard bearings. There should be a minimum end clearance of 0.015-inch between each rudder spindle and each outboard bearing. **(WE2A)**

13. Inspect depth rudders for bends or twists and straighten if necessary. Replace yoke (with rudder adjusting rod), depth rudders, and outboard bearings. Secure outboard bearings with screws. **(39)**

14. With rudder yoke central, check end clearance between depth rudder spindles and outboard bearings. There should be a minimum end clearance of 0.015-inch between each rudder spindle and each outboard bearing. **(WE2A)**

The above completes the overhaul and assembly of the tail cone assembly.

Chapter 8—Section 10

AFTERBODY—ASSEMBLY AND TEST

A. Clean and Inspect Shell and Pipes

1. Clean and inspect afterbody shell for dents, loose rivets, loose solder around bulkheads, rings, flanges, etc.

2. Clean and inspect nipples and pipes. Anneal pipes; chase threads on nipples and pipe nuts; and reseat seats where necessary. **(WE83, WE84, WE85, WE86, WE87, WE88, WE94, WE95)**

B. Install Units in Afterbody and Connect Pipes

1. Place a new gasket on starting gear flange; install starting gear and secure with screws. **(40)**

2. Install control valve and secure. **(41, 155)**

3. Connect the following pipes in afterbody:

(a) Manifold to starting gear **(141A)**

(b) Starting gear to manifold. **(141A)**

(c) Manifold to control valve. **(141A, 402)**

(d) Control valve to air-strainer body. **(141A)**

4. Install main engine assembly in afterbody:

(a) Turn afterbody bottom-up.

(b) Insert supporting bracket (SG 3174) into gyro door (Fig. 308).

(c) Secure guide bracket (SG 2879) to forward end of afterbody.

(d) Screw guide tool on end of after propeller shaft. **(447)**

(e) Inspect interior of afterbody and make certain that rudder rods are clear.

(f) Oil (D) and place a new gasket on turbine bulkhead seat.

(g) Install lifting handles on preheater pipe nipple and gyro spin nipple on bulkhead. **(446)**

(h) Install main engine assembly in afterbody, guiding propeller shaft through after bearing, and push engine into afterbody until turbine bulkhead is about four inches from its seat (Fig. 309).

Note: It requires three men to install engine in afterbody; one to guide shaft and two to carry forward end.

(i) Connect water pipe to turbine bulkhead (Fig. 310). **(141A)**

(j) Push main engine assembly rest of way into afterbody, until turbine bulkhead comes up against its seat.

Note: When pushing in main engine, make certain that pipes for manifold con-

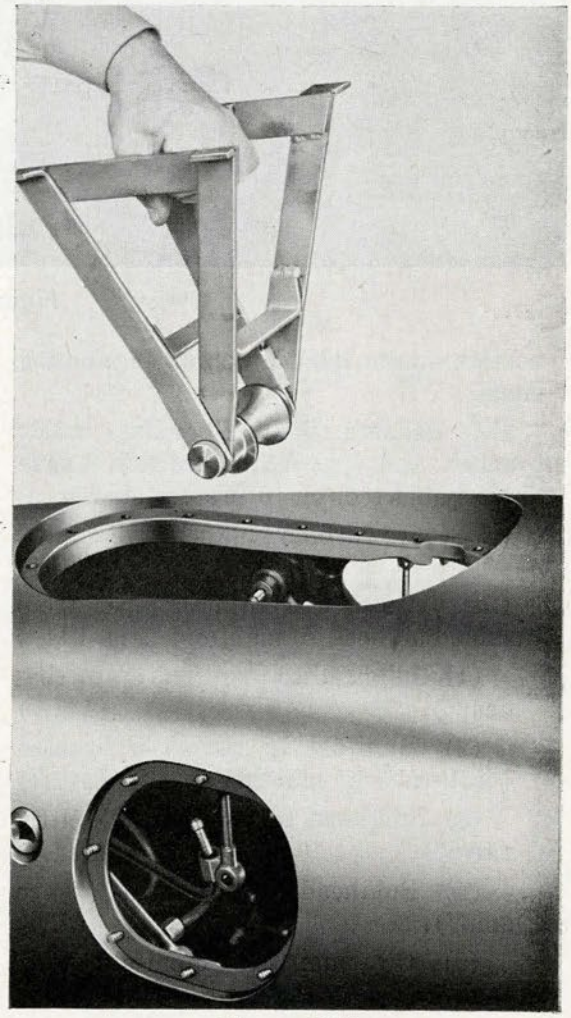

Figure 308

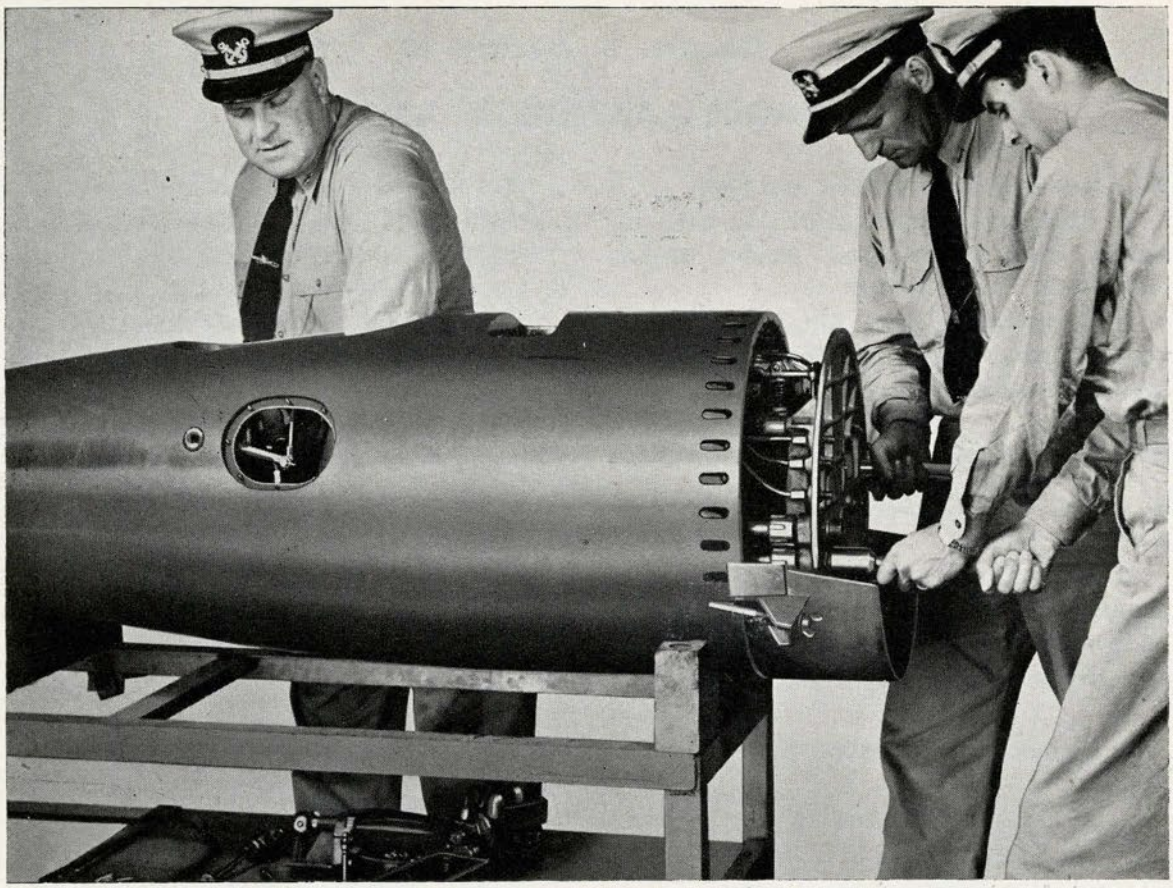

Figure 309

nection do not hang up on strengthening rings.

(k) Remove lifting handles, guide bracket, and supporting bracket. Leave shaft guide tool on to protect shafts.

(l) Secure turbine bulkhead with nuts. **(457)**

(m) Connect and tighten pipes from turbine bulkhead to manifold (Fig. 311):

(1) Bulkhead to manifold ("starting gear"). **(141A)**

(2) Manifold to governor bracket ("return from starting gear"). **(141A)**

(3) Bulkhead to manifold ("control valve"). **(141A)**

(4) Bulkhead to manifold ("gyro spin"). **(229)**

(5) Oil pump to manifold ("oil tank"). **(229)**

(n) Oil (D) and replace gasket for

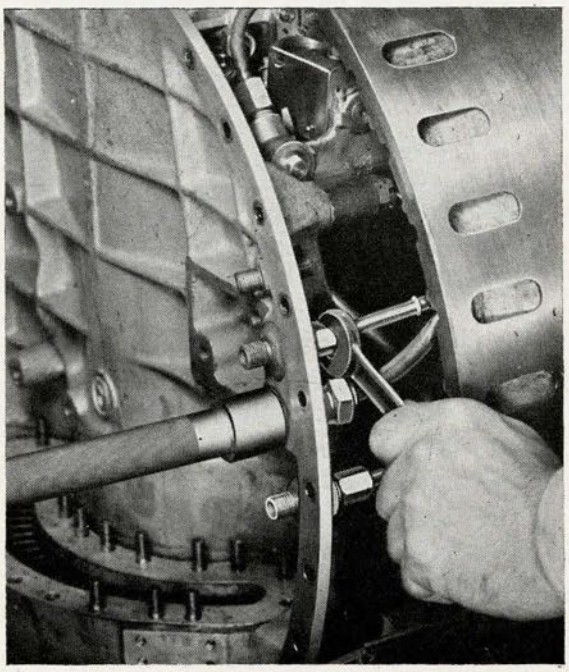

Figure 310

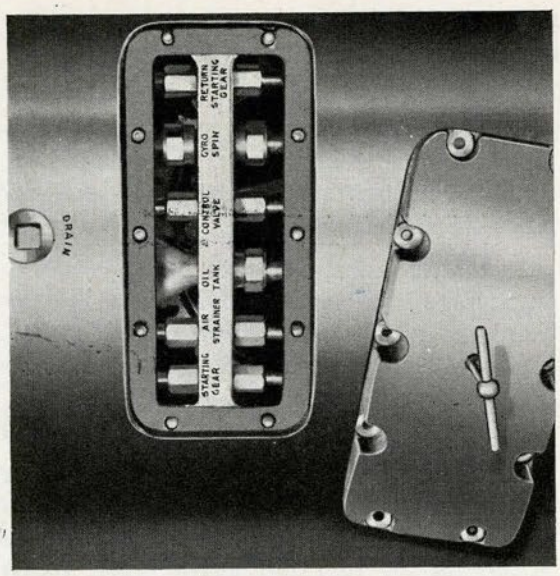

Figure 311

manifold cover. Replace manifold cover and secure with nuts. (48)

Note: Forward end of cover is marked "Forward".

C. Assemble Parts on Turbine Bulkhead and Connect Pipes

1. Replace combustion flask and nozzle unit:

(a) Coat nozzle gasket thinly with white lead and place over nozzle studs on bulkhead.

(b) Replace combustion flask and nozzle unit over gasket and secure with nuts and one screw. (227-227A, 435)

Note: Before replacing nuts, inspect them for belled-out ends and cracks.

2. Assemble speed-change mechanism (not applicable to Torpedoes Mk 23 Types):

Note: For disassembly, overhaul, and assembly of nozzle valve and bonnet assembly, see Section 5 of this chapter.

(a) Renew copper wire gasket for nozzle valve bonnet.

(b) Replace nozzle valve and bonnet assembly in nozzle plate. Note that dowel pins are lined up. Secure bonnet with four holding screws. (459)

(c) Pull nozzle valve to full open position. Using push balance on adjusting nut, measure force required to start valve. The force should be about two pounds. (98)

(d) Unscrew operating rack five (or six) complete turns.

Note: Start with operating rack handtight against valve and back off five (or six) complete turns.

(e) Hold the operating rack in position (teeth facing you); remove cotter pin and turn the adjusting nut one-half a complete turn (three holes) counterclockwise. Secure adjusting nut temporarily to operating rack with cotter pin. (72, 18)

Note: The above step is not an adjustment. Backing off the adjusting nut three holes makes it possible to seat the nozzle valve before it is adjusted (see step D-1, below).

(f) Push operating rack all the way in to seat nozzle valve. Turn operating rack ¼ turn to the left to prevent meshing with idler-gear pinion when installing speed-change operating-shaft bracket assembly.

(g) Clean and inspect speed-change operating-shaft bracket assembly. Make certain that parts work freely.

(h) Replace speed-change operating-shaft bracket assembly and secure with screws. (41, 386)

(i) Place Tool No. 430 (modified by the extension of the handle to give a one foot moment arm) into square socket on upper end of operating shaft. Place push-balance tip on end of tool handle and measure torque required to start operating shaft. The push-balance reading should not exceed two pounds. (430, 98)

(j) Turn operating shaft to low-speed position. (430)

(k) Note that nozzle valve is all the way in (closed).

(l) Turn operating rack to mesh it with idler-gear pinion. Note that proper mesh is obtained.

(m) Replace roller and pivot screw in back of operating rack, noting that

shoulder on roller is facing toward the bearing bracket. (41)

(n) Repeat torque test as in step (i). The push-balance reading should not exceed seven pounds. (430, 98)

D. Align Nozzle Valve with its Seat in Nozzle Forging

(Not applicable to Torpedoes Mk 23 Type)

Note: The nozzle valve, having been assembled with its operating mechanism, will require an adjustment to locate the corrugations on the valve face in proper alignment with the lapped seat in the nozzle forging. This alignment is obtained by adjusting the clearance between the upper end of the nozzle valve and its slot (seat) in nozzle forging from 0.145-inch to 0.155-inch.

1. Hold the operating shaft in low-speed position; remove cotter pin and turn the adjusting nut in the operating shaft clockwise until the nozzle valve is felt to hit its full length of travel. (72, 18)

2. Turn the adjusting nut counter-clockwise three and two-thirds turns (22 holes). (18)

Note: One-sixth of a turn (each hole) will move the valve 0.0067-inch; three and two-thirds turns (22 holes) will move the valve 0.147-inch, thus giving the valve proper alignment with its seat in nozzle forging. (The tolerance is 0.145-inch to 0.155-inch).

3. Secure adjusting nut to operating rack with cotter pin. (72)

4. Try operation of valve by turning operating shaft to high- and low-power positions. Shaft must hit stops in both directions. Set operating shaft in high-power position. (430)

E. Replace Reducing Valve Body Assembly on Turbine Bulkhead

Note: References to speed-change mechanism are not applicable to Torpedoes Mk 23 Type.

1. Place Tool No. 439 on restriction-valve pinion. Place tip of push balance on end of tool handle and measure torque required to move valve. The push-balance reading should not exceed three to five pounds. (439, 98)

2. Turn restriction valve so that large (high-power) restrictions are exactly in center of holes in nipples for fuel and water pipes. (See **Note**, below). (439)

3. Install reducing-valve body assembly on turbine bulkhead, with teeth in restriction valve pinion in mesh with driving gear. Line up screw holes and secure to bulkhead with three holding screws. (13-14 or 386)

4. Turn operating shaft to low-power position and observe small (low-power) restrictions. They should be in center of holes in nipples for fuel and water pipes. (430)

Note: It is important that restriction valve pinion and driving gear mesh when restrictions are lined up in center of holes in nipples, as a tooth out may cause high-pressure air restriction to be partly covered, with a consequent speed failure. An "H" is stamped on the restriction-valve pinion and a "zero" is stamped on the reducing-valve group body under the air-outlet elbow from the restriction valve to facilitate the alignment of restriction-valve pinion for high pressure.

5. Secure the two lower holding screws by wiring together. Secure the upper screw by wiring to keep screw for reducing-valve packing gland. (72)

6. With modified Tool No. 430 in square socket on upper end of operating shaft, repeat torque test as outlined in step C-2, (i), above. The push-balance reading should not exceed ten pounds. If torque is excessive, a complete check of alignment should be made before proceeding with further assembly. (430, 98)

F. Connect Following Pipes on Turbine Bulkhead

1. Main air pipe from stop valve. (134)

2. Starting valve to turbine bulkhead (gyro spin). (229)

3. Combustion flask to bulkhead (air strainer body). (141A)

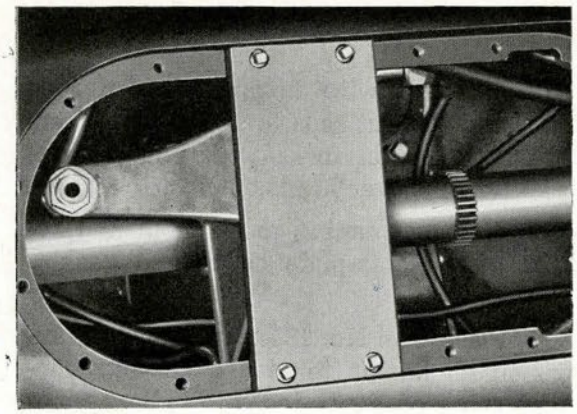

Figure 312

4. Starting valve to bulkhead (starting gear). **(141A)**

5. Bulkhead to valve-group body (starting-gear return). **(141A)**

6. Reducing valve to igniter. **(141A)**

7. Reducing valve to air check. **(229)**

8. Water pipe to bulkhead (depth mechanism). **(141A)**

9. Vent fitting to bulkhead). **(141A)**

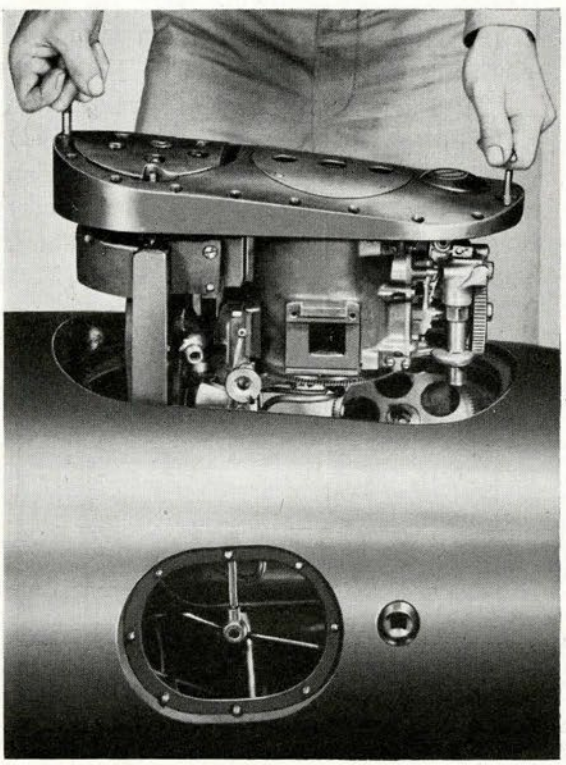

Figure 313

10. Restriction valve to combustion flask (air). **(134)**

11. Control chamber on reducing-valve body to bulkhead (control valve). **(141A)**

12. Restriction valve to fuel and water checks and sprays. **(144, 229)**

G. Install Gyro and Depth Mechanism

1. Install aligning fixture (SG 2851) in gyro door flange and secure with holding screws (Fig. 312). **(456)**

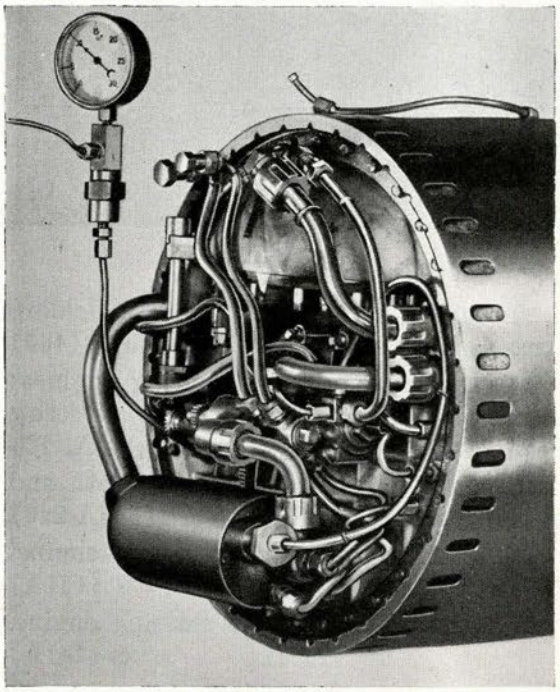

Figure 314

2. Align and connect gyro spin pipe to ¾-inch nipple on fixture. **(229)**

3. Disconnect gyro spin pipe from fixture; remove holding screws and remove fixture. **(229, 456)**

4. Place a gasket on gyro door flange.

5. Remove gyro clamp-plate cover, and lock spinning mechanism. **(13-14, 205A-246)**

6. Insert transportation screw. **(49)**

7. Relieve all tension on depth spring. **(180)**

8. Set depth index on zero. **(135A)**

9. Insert two lifting handles. **(200-441)**

10. Install gyro and depth mechanism in afterbody (Fig. 313). **(200-441)**

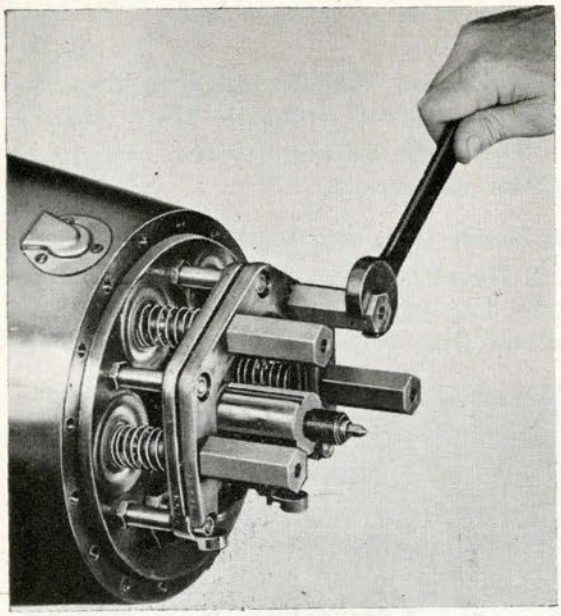

Figure 315

11. Secure mechanism with 19 holding screws, and remove lifting handles. (456)

12. Replace depth and steering engines; secure with holding screws and wire screw heads. (49, 49A, 72)

13. Make valve connection to depth and steering engines. (205A-246)

14. Connect air pipe to depth engine. (141A)

15. Connect air pipe to steering engine. (141A)

16. Connect water pipe (from turbine bulkhead) to depth mechanism casing. (144)

17. Connect air pipe to gyro-spin nipple. (437)

18. Remove wire holding rudder rods clear, and connect rods to depth- and steering-engine piston forks with pins. Move locks for pins over heads of pins.

19. Unlock spinning mechanism and replace gyro clamp-plate cover and gasket. (13-14)

20. Place Tool No. 135A (modified by extension on handle to give a one-foot moment arm) on depth-index spindle. Place tip of push balance near end of tool handle and measure torque required to turn spindle The push-balance reading should not exceed three pounds. If in excess, disassemble and remedy. (135A, 98)

21. Replace gaskets and hand-hole plates and secure with holding nuts. (48)

22. Check to see that drain plug in afterbody is tight. (13-14)

H. Test Afterbody Assembly for Leaks

(Fig. 314)

1. Blank off the following pipes:

(a) High-pressure air from stop and charging valve to preheater. (134)

(b) Fuel from check to restriction valve. (144)

(c) Water from check to restriction valve. (229)

(d) Reduced-pressure air to air check valves. (229)

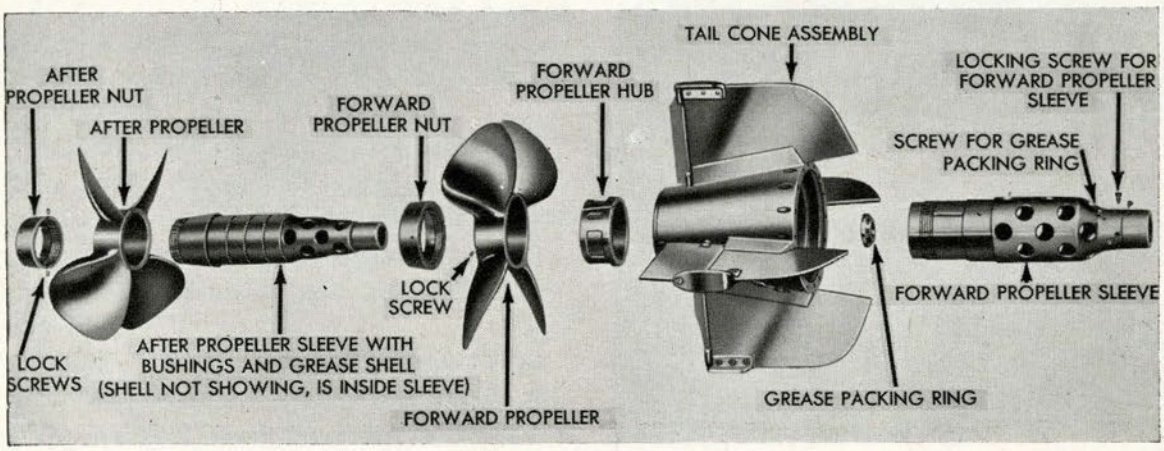

Figure 316

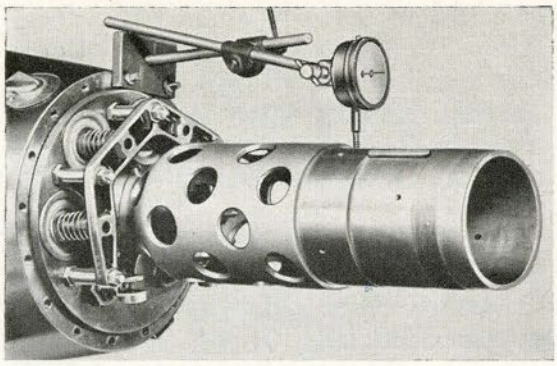

Figure 317

2. Remove propeller-shaft guide tool; force grease (G) through after propeller shaft until it appears around bushings between shafts, and replace grease packing screw and washer. **(481, 481A, 184)**

3. Remove cotter pins, nuts from exhaust-valve bracket studs; install exhaust valve gag (SG 5079) and secure with nuts. Tighten long nuts on gag until plungers hold exhaust valves on their seats with enough pressure to prevent valves from unseating during pressure test (Fig. 315). **(72, 408, 144)**

4. Remove vent pipe from bulkhead and connect special fitting for low-pressure air to vent-pipe nipple. **(141A)**

5. Connect low-pressure gage and air line to this fitting. **(141A)**

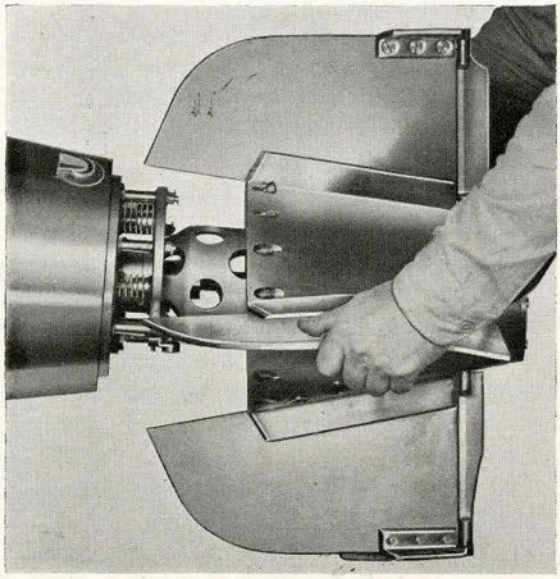

Figure 318

6. Turn on air and allow 10 p.s.i. air pressure to accumulate in afterbody.

7. Pour oil (C) around flanges and joints, and note if any air bubbles appear, indicating leaks. Inspect for leaks around rudder-rod stuffing boxes, around propeller shafts, and around exhaust valves. If leaks are found, they must be located and remedied.

8. With test completed and leaks remedied, remove blanks, special fitting, and exhaust valve gag. Secure exhaust-valve bracket with five nuts and cotter pins. **(134, 144, 229, 141A, 408, 72)**



Figure 319

I. Replace Tail on Afterbody
(Fig. 316)

1. Thoroughly clean and inspect all parts. Remove burrs if present.

2. Replace forward propeller sleeve:

(a) Replace grease packing ring and secure with screws. Wire screw heads. **(41, 72)**

(b) Line up "O" mark stamped in keyway on forward propeller shaft with "O" stamped on propeller sleeve, and push sleeve into place. Secure sleeve to shaft with locking screws and wire screw heads. Try to pull sleeve off as a check to make certain it is securely locked. **(41, 72)**

(c) Attach dial indicator fixture to tail joint and set indicator tip on bearing surface of sleeve (Fig. 317). Turn sleeve and note how much it is out of true. If a sleeve is out of true more than 0.009-inch, inspect keys and keyways for burrs. If burrs do not seem to be the cause, it will be necessary to place sleeve between centers in lathe and check for true. If sleeve is found out of true, a new sleeve must be installed, as the old sleeve has been distorted by heat.

3. Replace tail cone assembly on afterbody and secure with 16 joint screws (Fig. 318). **(49 or 184)**

4. Measure clearance between shoulder of forward propeller sleeve (inside tail cone) and tail bearing as follows:

(a) Remove eight holding screws and tail bearing. **(40, 61)**

(b) Pull forward propeller sleeve aft as far as it will go, and measure distance from shoulder of sleeve (inside tail cone) to after face of tail cone. **(WE8)**

(c) Measure depth of tail bearing from its forward end to face of flange which bears against after face of tail cone. **(WE9)**

(d) Subtract reading found in step (c) from reading found in step (b). The difference between these two readings is the amount of clearance between the shoulder of the sleeve and the forward end of the tail bearing when the latter is assembled to the tail cone and when the forward propeller sleeve is aft (as when the torpedo is being towed in water). This clearance should be not less than 0.170-inch.

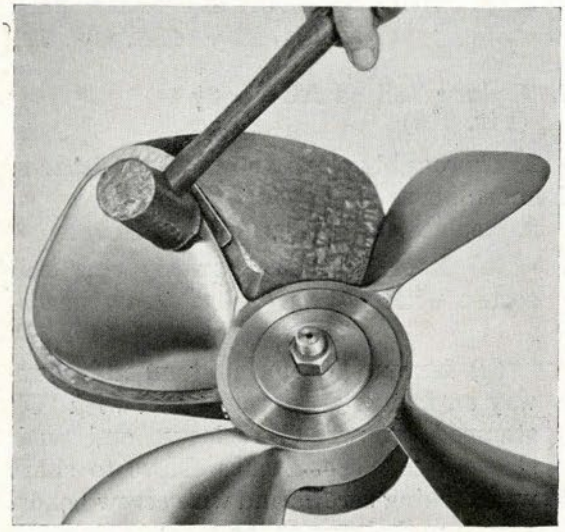

Figure 320

(e) Grease (G); replace tail bearing and secure with eight screws. **(40)**

5. Secure rudder adjusting rods to rudder connection ends (forks) with screws. **(386)**

6. Replace access hole (drain) plugs and washers in tail cone. **(13-14)**

7. Insert key in keyway of forward propeller sleeve, numbers corresponding and facing out.

8. Oil (D) and replace forward propeller hub, "O" mark on keyway lining up with "O" mark on key.

9. Check propellers for true:

(a) Place propeller on former block; assemble former block hub, washer, and nut. Tighten nut. **(191)**

(b) Bring propeller blade tight up against former block and note if flush with face of block by inserting 0.003-inch feeler gage at various points (Fig. 319). If gage can be withdrawn at some points but binds at other points, blade is out of true with former block. **(WE2A)**

*10. Straighten propellers:

(a) If blade is only a small amount out of true, shim high spots between blade and former block with lead or copper shims, and tap blade with small copper hammer (Fig. 320).

(b) If blade is bent out of line more than ¼ inch, apply heat and straighten with copper hammer.

Note: In applying heat, exercise care not to apply more than necessary (slight discoloration only). If too much heat is applied, the temper may be drawn.

(c) Remove propeller from former block. **(191)**

(d) After straightening blade, smooth it with a file and emery cloth.

11. Oil (B) and replace forward propeller over hub with "O" marks matching.

12. Replace forward propeller nut, screwing all the way up until marks are in line. (425)

13. Replace two lock screws for forward propeller nut. (40)

*14. Replace grease shell in after propeller sleeve (in torpedoes which have the improved tail lubricating system):

(a) Thoroughly clean and inspect after propeller sleeve. Make certain that all holes are clear.

(b) Place after propeller sleeve on end of after propeller shaft temporarily.

(c) Thoroughly clean and inspect grease shell. Make certain that all holes are clear.

(d) Observe the way old packing is wrapped on shell; then remove old packing. Renew packing, using two pieces of 3/32-inch diameter asbestos packing 18¾ inches long.

(e) Insert grease shell into sleeve, lining up holes in shell and hub of sleeve for set screw. Replace set screw. (400)

Note: When inserting shell into sleeve, exercise care not to displace packing.

(f) Remove after propeller sleeve from shaft.

15. Thoroughly clean and inspect propeller-sleeve bushings, making certain that all holes are clear and no burrs are present. Grease (G) and slip four bushings on after propeller sleeve.

16. Observe location of "O" mark on after end of after propeller shaft by looking through forward propeller sleeve. With "O" mark on sleeve lined up with "O" mark on shaft, place sleeve (with bushings) on shaft and tap in place with a soft lead hammer.

Note: Extreme care must be exercised in tapping after propeller sleeve in place. Excessive tapping may result in a cracked thrust-bearing race.

17. Secure sleeve to shaft with nut. (183)

18. Turn forward propeller and note if any binding occurs between sleeves; if so, it will be necessary to remove after propeller sleeve and check it for trueness between lathe centers.

19. Replace after propeller, with "O" marks on key and propeller lining up.

20. Replace after-propeller nut, screwing all the way up until marks are in line. (426)

21. Replace two lock screws for after propeller nut. (40)

22. Put on propeller lock.

J. Test Afterbody on Afterbody Adjusting Stand

1. Sling afterbody assembly and place on afterbody adjusting stand.

2. Blank off the following pipes:

(a) Reduced air to air check valves. (229)

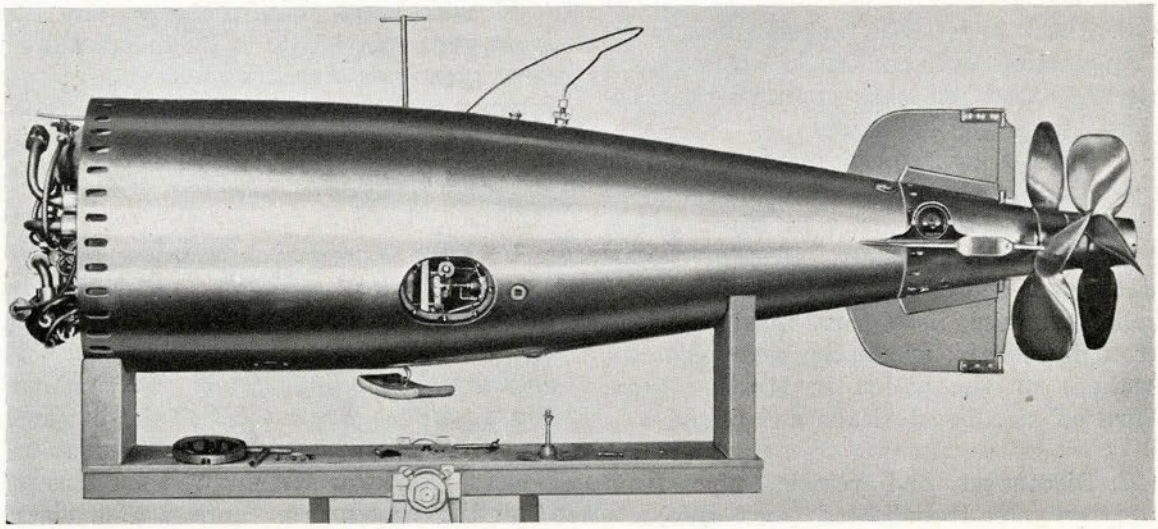

Figure 321

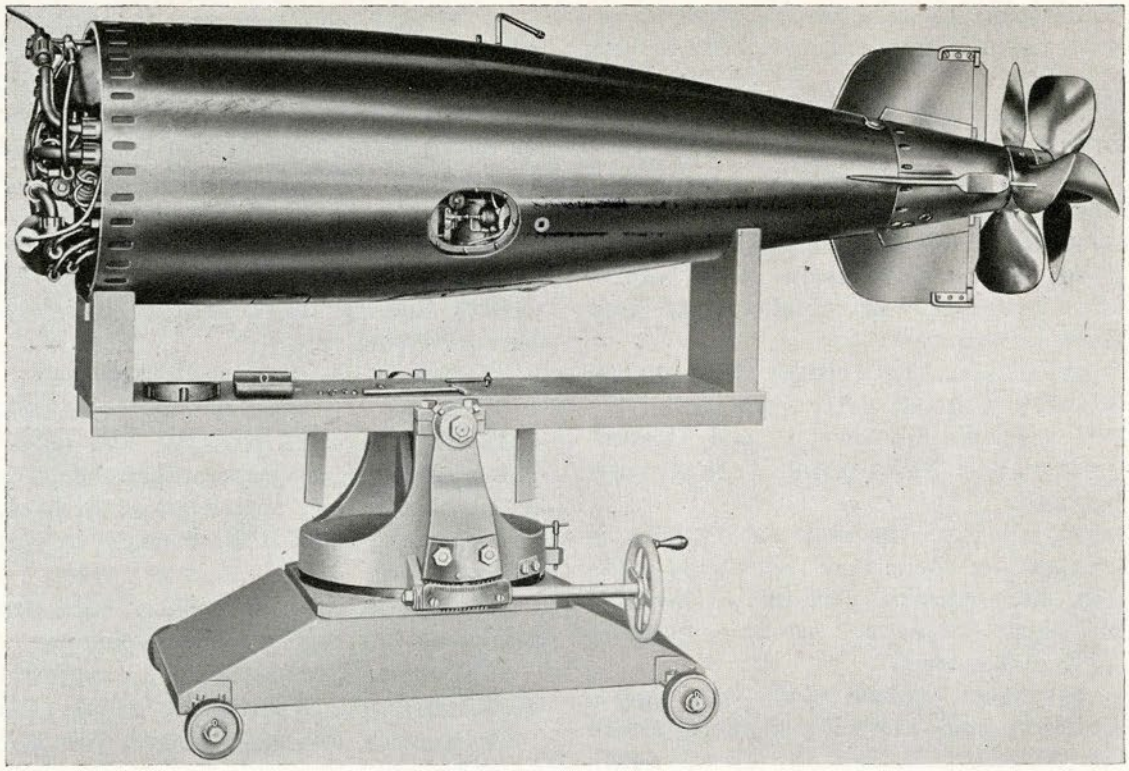

Figure 322

(b) Fuel check to restriction valve. (144)

(c) Water check to restriction valve. (229)

(d) Vent pipe from vent fitting to turbine bulkhead. (141A)

3. Connect nipple and high-pressure air line to main air pipe from stop valve to preheater. (134)

4. Check to see that propeller lock is on. Trip starting lever and crack valve on main air line. Test for leaks around all connections on turbine bulkhead.

5. Turn starting-gear index spindle to seat starting piston. (227-227A)

6. Remove blank on vent pipe; loosen pipe and turn end down. Place a cup of water over end of pipe and note if any air bubbles appear; if so, there must be a leak around preheater or starting-gear pipe connections or the piston in starting gear. Turn off air. Locate leaks and remedy. (141A)

7. Disconnect and remove pipe from starting valve to bulkhead (gyro spin). (229)

8. Disconnect high-pressure air line from main air pipe and connect it to gyro spin nipple on bulkhead. (134, 229)

9. Turn on high-pressure air and test for leaks in gyro spin line and impulse valve. If air escapes through end of pipe to vent fitting, there must be a leak in the line. Locate leak and remedy.

10. Disconnect high-pressure air line from gyro spin nipple in bulkhead and replace pipe from starting valve to gyro spin nipple. (229)

11. Connect high-pressure air line to pipe from stop valve to preheater, but do not turn on air. (134)

12. Remove hand-hole plates. (48)

13. Move depth rudders up and down by hand and read throw each way. The throws should be two up and four down, and both rudders should line up. If the combined throws do not give a total of six divisions, check the following places for trouble:

(a) Fork for steering rod not screwed all the way up on depth engine piston rod.

(b) Gland for rudder connection through after bulkhead not screwed all the way in on packing.

(c) Rudder adjusting rod on yoke too long.

14. If total rudder throw is sufficient (six divisions), but adjustment up and down is incorrect, remove plugs from tail cone, change adjustment and check again. When correct throws have been obtained, clamp adjustment and replace plugs in tail cone. **(13-14, 386, 49)**

15. Remove plug from air-strainer body, and replace it with adapter tool. Connect low-pressure (450 p.s.i.) air line to nipple in adapter tool; check to see that transportation screw is in place, and turn on air. Note if scribe mark on depth-engine valve connecting rod lines up with scribe mark on valve stop, and rudders read neutral throw of one down. Any deviation from the above will require readjustment. **(12, 233, 191, 141A)**

16. Remove transportation screw. Level afterbody, unscrew plug from air chamber, and install screw hook and ten-pound weight. With air on, turn depth index spindle until scribe mark on depth-engine valve connecting rod lines up with scribe mark on valve stop (Fig. 321). With lifting tool, hold spindle disengaged; turn depth index to read ten feet; remove lifting tool and turn depth index slightly to engage adjusting socket. Turn index to zero and back again to ten feet. The scribe marks should again come into alignment; if not, readjust until obtained. **(49, 11, 411A, 135A, 472)**

17. Level afterbody. Adjust pointer on cradle to zero on indicator scale on carriage of adjusting stand. With air on, elevate and depress afterbody. Note movement of pendulum and valve for smoothness. Pendulum should start to move with no more than half degree tilt up or down, and should get 2½ degrees of tilt. Rudders should move smoothly without jerks.

18. Remove propeller lock. Turn propellers until pallet is in extreme forward position. With air on, move steering-engine valve and read rudders each way. See torpedo's record book for correct throws. Equalize throws, if necessary, by rudder rod adjustment in tail. Turn torpedo bottom-side-up. **(44)**

19. Remove gyro clamp-plate cover and gasket, holding screws, and bottom head. **(13-14, 205A-246)**

20. Inspect top and bottom bearings of gyro. Oil bearings with two drops of oil (A), using syringe.

21. Lock and unlock spinning mechanism to make certain it is working properly. **(205A-246)**

22. Turn propellers to move pallet to its extreme after position. Install gyro, taking care not to damage extender in top bearing holder. Replace bottom head and secure. Note vertical play of gyro between its bearing holders in gyro pot. **(205A-246)**

23. Turn torpedo right-side-up. With air on line through strainer body, turn propellers, swing gyro in azimuth by hand, and note if any binding occurs when cam pawls touch concentric ridges or cam on gyro cam plate. Also note rudder throws again. They should be the same as those observed in step 18, above. Turn off air.

24. Lock and unlock gyro. Make certain that spinning mechanism unlocks smartly and does not kick gyro. Check to see that top plate is centered.

25. Lock gyro and replace clamp-plate cover and gasket. **(205A-246, 13-14)**

26. Remove air line from nipple on adapter; remove adapter from air-strainer body and replace washer and plug in body. **(141A, 223, 191, 12)**

27. Clamp afterbody adjusting stand with azimuth pointer on "0". If propeller guard is available, attach to tail; if no guard is available, caution personnel to stand clear of tail during test.

28. Turn starting-gear index spindle to seat piston. Open air-line valve wide open and throw back starting lever; after gyro is spun, regulate air-line valve to deliver about 700 p.s.i. pressure. **(227-227A)**

29. Loosen clamp on adjusting stand and move stand each way in azimuth (Fig. 322).

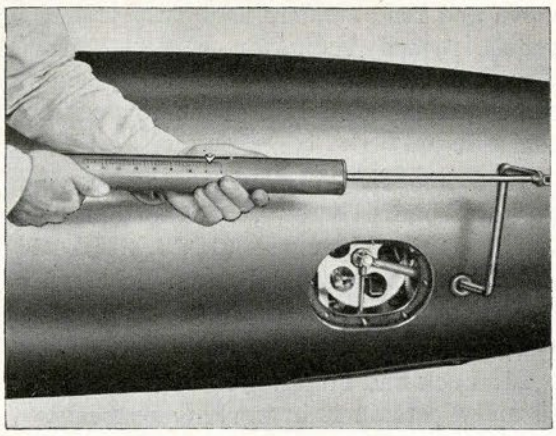

Figure 323

Gyro rudders should operate inside of 1/5 of one degree on each side of center, if gyro and mechanism are properly adjusted. Close air-line valve and replace propeller lock.

30. Remove gyro clamp-plate cover and gasket, holding screws, bottom head, and gyro. **(13-14, 205A-246)**

31. Remove blank nut from gyro reducing-valve test connection. Connect test pipe and low-pressure gage to test connection. Open air-line valve and note reading on low-pressure gage. The reading should be 125 p.s.i.; if not, remove and readjust reducer. Turn off air; remove low-pressure gage and test line. **(24, 134)**

32. Check to see that gyro top plate is set on zero. Replace gyro bottom head and secure. Replace gyro clamp-plate cover and gasket. **(205A-246, 13-14)**

33. Disconnect and remove control valve. Take compression off control valve spring, and return valve to stowage box. **(141A, 402, 41, 155, 40)**

34. Give a final inspection inside afterbody, making certain that all connections are secured and that no tools are left inside afterbody.

35. Replace forward gyro index gear assemblies:

(a) Turn side setting sockets to zero. **(227-227A)**

Note: Gyro top plate must be set on zero.

(b) Replace forward gyro index gear assemblies, meshing pins with worm-spindle sockets and meshing gears with after gyro index gears.

(c) Line up struts and spreaders with holes in forward gyro index gears. Insert spreader lock pins and secure with retainer pins and cotter pins. **(72)**

36. Measure torque required to turn angle-setting sockets:

(a) Place Tool No. 227-227A (modified by the extension of handle to give a one-foot moment arm) into angle-setting socket. **(227-227A)**

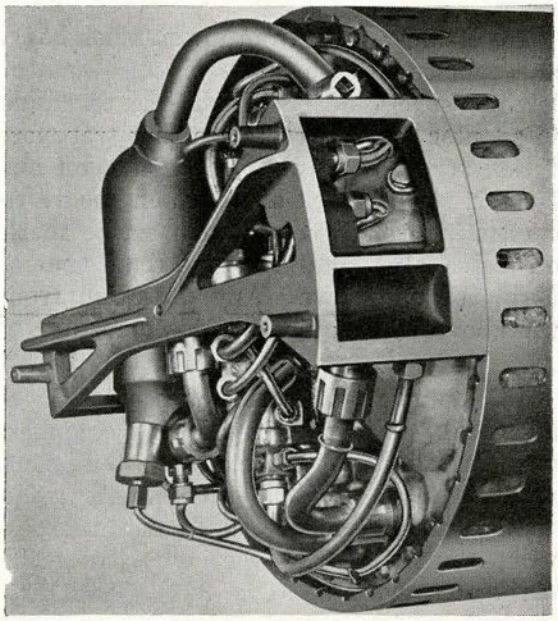

Figure 324

(b) Place tip of push balance near end of modified tool and note push-balance reading when socket begins to turn (Fig. 323). The push-balance reading should not exceed five pounds. **(227-227A, 98)**

37. Replace hand-hole plates with good gaskets and secure with nuts. Tighten nuts evenly. **(48)**

38. Insert transportation screw. **(48)**

39. Remove blanks and air fittings from pipes. **(134, 229, 144)**

40. Align pipes on turbine bulkhead:

(a) Install aligning fixture (SG 2935) on afterbody joint ring and secure with joint screws. **(386)**

(b) Connect main air pipe, fuel, water,

and air pipes to fixture and tighten connection on turbine bulkhead so that pipes will not spring out of line when fixture is removed (Fig. 324). **(134, 144, 229)**

Note: It may be necessary to tap in place with a lead hammer, exercising care not to collapse the pipes.

(c) Disconnect pipes from fixture; remove joint screws and remove fixture. **(134, 144, 229, 386)**

41. Line up and secure vent pipe to bulkhead. **(141A)**

Afterbody is now ready for assembly on air flask.

Chapter 8—Section 11

ASSEMBLY OF AFTERBODY ON AIR FLASK

A. Join Afterbody to Air Flask

1. Turn speed-change operating shaft to "High" (not applicable to Torpedoes Mk 23 Type). **(430)**

2. Hoist afterbody up slightly above air-flask joint.

3. Join afterbody to air flask, holding tail higher and slightly to the right. With pipe connections lined up, lower chain fall and push afterbody in place on air-flask joint (Fig. 325). Make certain water pipe (to depth mechanism casing) is clear.

Note: If main air-pipe nut contacts reducing-valve body after restriction valve is indicated by scratches on body, it will be necessary to remove stock from bottom of after side of this nut by filing until sufficient clearance is obtained. Do not remove more stock than necessary to give the proper clearance.

4. Secure afterbody to air-flask with joint screws, inserting top screws first and tightening screws evenly around joint. **(386)**

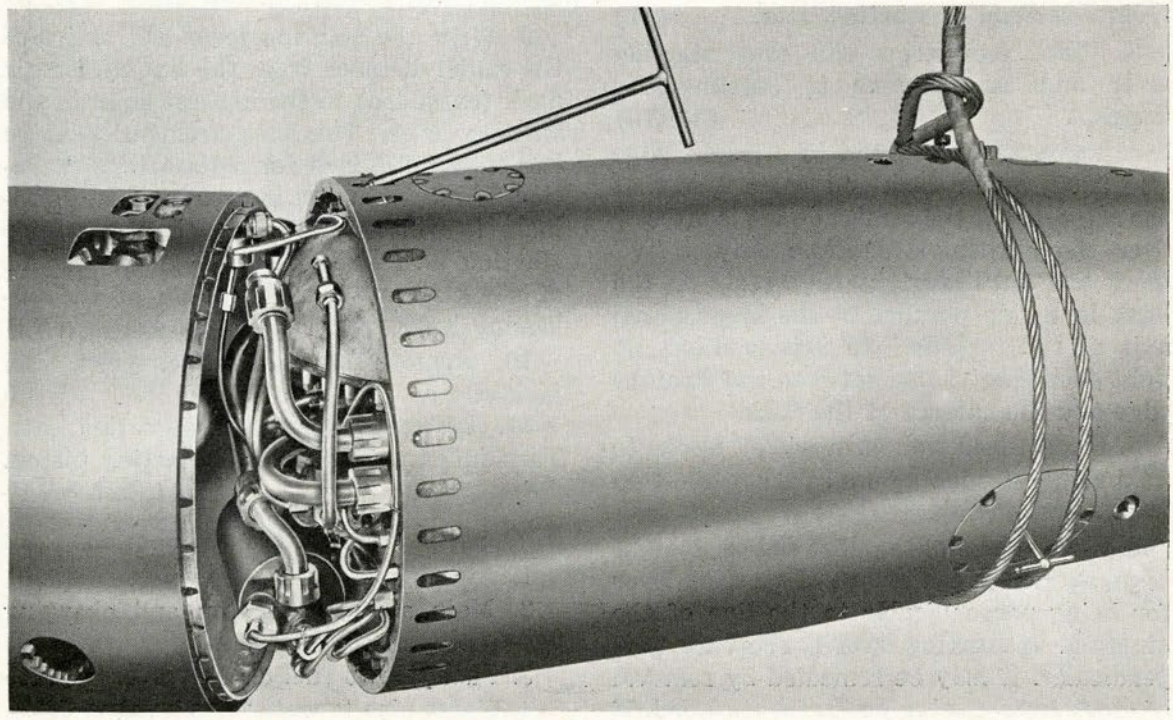

Figure 325

***B. Check Alignment of Afterbody with Air Flask**

Note: It is desirable to check alignment of afterbody with air flask after a major overhaul or when it has been necessary to straighten out dents on afterbody or midship section.

1. Locate blocks, with rolls (SG 1685) on deck in wake of hoisting gear.

2. Place torpedo on blocks.

3. Place 12-inch x 12-inch surface plate directly under tail to furnish a plane and rigid foundation for dial indicator base. Level surface plate.

4. With dial indicator placed on surface plate, obtain successive readings on each outer surface of rudder outboard bearings, turning torpedo and leveling each blade in succession before obtaining the indicator reading. A maximum tolerance of 0.015-inch is allowed on the four readings.

C. Check Position and Alignment of Starting Lever

1. Check to see that stop valve is closed. **(227-227A)**

2. Remove two opposite holding screws from after end of starting gear. **(41)**

3. Place jack-screw clip over starting lever and secure yoke to starting-gear flange. **(WE78)**

4. Place "V" block end of straight edge (SG 2800) on air flask and locate it so that the after end of the straight edge is directly over the starting-lever tip. Adjust "V" block end until straight edge rests on the flask in a line parallel to the longitudinal axis of the torpedo. In this position, no light should be visible between the straight edge and the surface of the flask.

5. Place a lead weight over "V" blocks to hold straight edge against flask while taking measurements.

6. Place steel scale against end of straight edge, and check center line of starting lever for being perpendicular to the line of the air flask. If starting lever is abaft the perpendicular, it may be remedied by removal of stock from the lug on its forward end. If starting lever is forward of the perpendicular, it should be replaced by one having more stock on lug. **(WE8)**

7. Place micrometer depth gage on straight edge, and measure the radial distance from the line of the air flask (extended) to the highest point of the starting-lever. This distance should be not less than 0.120-inch nor more than 0.150-inch. If necessary to remove stock from tip of starting lever, the best condition is obtained when the measurement is 0.135-inch, thus giving latitude for variations in thickness of starting gear gasket. The contour gage should be used to check the contour when filing the tip of the starting-lever. **(WE9, WE77)**

8. Using a steel scale, measure the distance from the center line of the tip of the starting lever to the forward side of the jack-screw yoke. Turn the jack screw, pulling the starting lever aft until three clicks of unlocking lever are heard. Again measure the distance from the center line of the tip of the starting lever to the forward side of the jack-screw yoke. The difference of the measurements gives the rearward displacement of the starting lever, which should be 0.718-inch to 0.768-inch. **(WE8)**

9. With the starting lever aft, measure the radial distance from the line of the air flask (extended) to the highest point of the starting lever. This measurement must be less than 0.275-inch for satisfactory operation. If measurement is greater than 0.275-inch, it will be necessary to disassemble starting gear and remove a small amount of stock from the third notch of the unlocking lever. **(WE8)**

10. Remove straight edge, yoke, and jack screw.

11. Replace two screws for starting gear. Turn index spindle to seat starting piston. **(41, 227-227A)**

D. Connect Pipes in Midship Section

1. Air pipe to air check valves. **(229)**
2. Main air pipe to stop and charging valve. **(134)**
3. Fuel pipe to fuel check valve. **(144)**
4. Water pipe to water check valve. **(229)**
5. Vent pipe to vent fitting. **(141A)**

Note: It will be found convenient to have a piece of brass bar stock 5/8-inch round and about 18 inches long, with flattened end, for use in lining up the pipe connections listed above when connecting.

E. Install Upper Speed-Change Operating Shaft

(Not applicable to Torpedoes Mk 23 Type)

1. Oil (D) and try shaft for fit by inserting it into bearing with high-speed mark lined up with reference mark on shell. If shaft has to be forced into place, it may be necessary to dress burrs off to obtain a snug fit without binding. Turn shaft to low-speed setting and ascertain that shaft does not stick. (419)

2. Replace guide block for setting tool and secure with holding screws. (41)

3. Try shaft with setting tool to make certain shaft locks properly after each setting. (419)

4. Insert Tool No. 419 (modified by the extension of the handle to give a one-foot moment arm) into upper operating shaft. Place tip of push balance near one end of tool handle and measure torque required to start shaft. The push-balance reading should not exceed ten pounds. If this reading is exceeded, it will be necessary to locate source of trouble and remedy. (419, 98)

F. Check Guide-Stud Screws

1. Check guide-stud screws to make certain they are tight. (39)

*2. If screws have been removed, apply oil (D) to threads; replace screws and tighten. (39)

G. Charge Air Flask to 2800 P.S.I.

1. Check to see that propeller lock is on, blow valve is closed, and starting piston is seated. (49, 227-227A)

2. Remove fuel and water filling plugs. (11, 217, 74)

3. Remove charging-valve plug and washer. (13-14)

4. Before installing charging line, tie wing nut down and blow air line free of moisture and foreign material.

5. Install charging line and safety strap.

6. Charge air-flask to 2800 p.s.i.

7. During charging, place a cigarette paper soaked in oil (D) over water-compartment filling-plug hole and note if any air leaks into water compartment.

8. During charging, try holding screws for stop and charging valve body, air check valve body, and delivery check valve body for tightness. (41)

9. Close stop valve; bleed air from charging line; remove safety strap and charging line; and replace charging valve plug and washer. (13-14)

H. Check Connections on Air-Flask Section for Leaks

(At 2800 P.S.I. Pressure)

1. Throw starting lever to open starting piston.

2. Crack stop valve, and squirt oil (C) around air connections in midship section. Bubbles will indicate leaks. (227-227A)

3. Turn index spindle to seat starting piston; open stop valve wide and proceed to test high-pressure connections in midship section as in step 2, above. (227-227A)

4. Close stop valve. Throw starting lever aft to bleed air banked up between stop valve and starting piston. Turn index spindle to seat starting piston. (227-227A)

5. In the case of torpedoes with welded air flasks, test air-vent plug and bushing on air flasks for leaks, using oil (C).

6. Check forward bulkhead for leaks, using oil (C).

7. Blank off nipple of air-flask blow valve; open blow valve and test for leaks. Close blow valve and remove blank. (404, 49)

8. Remedy all leaks found in steps 2, 3, 5, 6, and 7, above, before proceeding further.

The torpedo is now ready for **Preliminary Adjustments.** The exercise head is given a final test and installed on the air flask before **Final Adjustments** (see Chapter 7). If the torpedo is going to be stowed after overhaul, open air-flask blow valve, bleed flask down to 100 p.s.i. and close blow valve.

Chapter 9

SAFETY PRECAUTIONS

General

The attention of all concerned is invited to the necessity for the continuous exercise of the utmost care and prudence in the handling of torpedo explosives and high-pressure air.

All persons in the naval service whose duty it may be to supervise or perform work in connection with the inspection, care, preparation, or handling of torpedoes and pertinent explosives shall exercise the utmost care that all regulations and instructions are rigidly observed. No relaxation of vigilance with respect to these precautions shall ever be permitted. It is only by such means that accidents can be prevented. Familiarity with work is often apt to lead to carelessness.

Safety Precautions Applicable to Charging Torpedo Air Flasks

1. Propeller lock and starting-lever lock shall be habitually used, except when the torpedo is in a condition of readiness for firing, or when running the engine for test.

2. Use utmost care to prevent sharp bends or twists in charging lines.

3. Maintain portable copper charging lines and test-connection lines in a pliable condition by having them annealed whenever necessary.

4. Never commence a charge until the safety strap is secured, and fuel and water filling plugs have been removed.

5. Do not remove safety strap until charging supply valve has been closed and the bleeder valve opened.

6. Always insure that threads on wing nuts and other connections are in good condition and not cross-threaded.

7. Torpedo air flasks shall never be charged with air to exceed the designated working pressure stamped on the flask.

8. Overcharging with warm air which is allowed to cool to the designated pressure is prohibited.

9. Artificial cooling of torpedo air flasks after charging, by spraying with water, or by flooding the torpedoes in the tubes, is prohibited.

10. Always insure that charging of the torpedo air flasks is done through the separators.

11. Blow down the separator frequently to insure the delivery of dry air.

12. Keep your eye on the air-pressure gage during a charge.

13. Always place a danger sign on charged torpedo air flasks as a warning to prevent their being touched by inexperienced personnel.

14. Charged air flasks should never be allowed to stand in the direct rays of the sun but should be kept covered, with air space between cover and torpedo when so exposed.

15. Blowing down of air flasks will be accomplished by using the flask blow valve when practicable.

16. Always remove the war head or exercise head before blowing down the flask, through the flask blow valve.

17. Never blow a flask down through the torpedo reducing valve.

In Testing Functioning of Depth and Gyro Mechanism with Gyro

1. The air shall be controlled from the stop valve, tool in place at all times during test, in order to close valve quickly.

2. Use two propeller locks secured with lanyard, on two opposite blades when spinning gyro.

3. The torpedo shall **never** be run at full speed.

4. Stop valve should be opened just enough to get proper function of depth and steering engines.

5. Hot runs of torpedoes shall only be made in the course of normal launching from tubes of submarines, tubes, or racks of surface craft, from aircraft, or in approved dynamometer tanks. Hot running of torpedoes on deck aboard ship, or ashore except in the course of dynamometer tank test, is strictly prohibited.

Handling of Torpedoes

1. In handling torpedoes, the strain in lifting shall always be applied to the heavy part of the shell of the air flask.

2. Under no condition will the torpedo tail be used for turning, but the sluing tool and strap provided for that purpose must be used.

3. Whenever a torpedo is turned while on a truck or in chocks, listen for abnormal sounds. Loose lead ballast weights, screws which may have backed out, etc., have been discovered in this manner.

4. When the stop valve of a fully ready torpedo has been closed, remove the igniter and unlock the gyro; crack stop valve half turn; drain combustion pot; lock gyro; top off fuel and water compartments; install igniter; connect air pipe; then open stop valve wide.

Applicable to Ships Carrying Torch Pots (Calcium Phosphide)

1. Torch pots shall not be stowed or permitted within 20 feet of a gasoline container.

2. Torch pots of any sort shall not be stowed below decks.

3. Torch pots shall not be used in torpedoes when carried by or launched from aircraft, or fired from submerged tubes, except by special permission.

4. Torch pots should be inspected periodically, and those found bulged at either end thrown overboard. Care should be taken to avoid jarring these bulged pots in handling.

5. Torch pots which are seriously corroded should be thrown overboard.

6. In order to avoid fire hazard, torch pots should be thrown overboard only in the open sea, and should not be thrown overboard during an evolution such as fueling ships or boats, when a small flame in the vicinity is dangerous.

Applicable to War Heads and War-Head Attachments

1. In no case shall any of the two classes of explosives, viz., detonators and war heads, be stowed near one another.

2. No detonator or firing mechanism containing a detonator shall be assembled in a war head which is stowed in or near a magazine containing explosives.

3. Extreme care shall be exercised when removing detonators from containers and installing on exploder mechanism.

4. Never remove a detonator from safety chamber.

5. Before installing detonator, note that threads of the arming gear are disengaged from the arming screw, the detonator is in unarmed position and scribe marks are in line, between detonator holder and safety chamber.

6. Always see that the delay wheel is in the starting position. Under no circumstances should the delay wheel be tied back. To do so will make the entire exploder mechanism, including the impact feature, inoperative.

7. To prevent premature firing of the exploder mechanism, always guard against

the presence of moisture. Coating the terminals and exposed wires with three coats of insulating varnish after connections have been made is of the utmost importance.

8. Extreme care must be taken to see that wires to impact switch are not fouled, cut, or grounded, when loading the mechanism in the head; otherwise exploder will not function.

9. Extreme care must be taken in removing an exploder mechanism from a war head.

10. Exercise the greatest of care in removing detonator from exploder mechanism, and replace in stowage container with the detonator fully housed in safety chamber.

Note: The exploder mechanism and detonator shall be handled **only** by **experienced personnel.**

Recovering Torpedoes

1. Boats going alongside of torpedoes must be warned to keep the torpedo clear of the propeller at all times and approach the torpedo on the lee side. This prevents the torpedo from being washed up against or underneath the boat.

2. The propeller lock shall be put on at the earliest possible moment.

3. Torpedoes in tow of boats shall be towed by the head.

Transporting of Torpedo Air Flasks (Charged)

Torpedo air flasks in a fully charged condition shall not be transported, hoisted from one deck to another, struck below, etc., except when it is not possible to perform the operation efficiently and expeditiously with the air flasks partially charged; and then only by express authority from the S.O.P. Torpedo air flasks shall be transported (and this includes shipment by government or commercial carrier) with sufficient air to hold the air-flask bulkheads on their seats. This will normally be in the vicinity of 100 p.s.i. pressure. Boxes shall be plainly stencilled and torpedoes tagged with a statement as to the existing air flask pressure when shipment or transfer was affected.

Appendix

PRINCIPAL DIMENSIONS, WEIGHTS AND CHARACTERISTICS OF TORPEDOES MARK 14-3A, 23, 23-1

Mark of Units

War head 16, 16-1, 16-2
Exercise head 30, 30-1, 30-2
Gyro 12-3

Performance

Speed, acceptance and service, knots ..... 32 L.P. - 46 H.P.
Range, acceptance and service, yards 9000-4500
Distance exercise head blows, about, yards ..... 9700 L.P. - 5500 H.P.
Total distance of run, yards ..... 10200 L.P. - 5800 H.P.
Maximum Depth carried in tube w/door open. (ch 9)
Launching - 200 ft 500 ft

Dimensions (inches)

Diameter 21
Length, over all, with war head or exercise head 246
Length of war head or exercise head, from end of nose piece to joint line ..... 47.28 Mk 16
Length of air flask, from joint line to joint line 116.16
Length of afterbody, from joint line to joint line 63.38
Length of tail, from joint line to end 19.19

Weights (pounds)

Explosive charge, TNT or TPX ..... 600, Mk 16
War head, empty, without attachments 264
War head, loaded, with attachments, ready for firing, or exercise head ready for firing 950-832
Exercise head, empty 421.5
Air-flask section, empty 1062
Afterbody, complete with gyro, tail and oil 781
Total air charge, 62 degrees F., 2800 p.s.i. 256
Fuel 28.5
Water 83
Oil 24.4
Ballast, lead, in exercise head 290
Ballast, water, in exercise head 414.5
Torpedo, empty, with war head (and attachments) and gyro, or with exercise head full and gyro..... 2679±20
Torpedo, with war head or exercise head, ready for war shot or exercise shot ..... Ex.Hd. 3071±20
W.Hd. 3185±20

Capacities

Air flask, charged, cu. ft. 18
Fuel flask, pints 33
Water compartment, pints 80
Oil tank, pints 26
Fuel spray, seconds to deliver six pints water at 35 p.s.i. pressure 46
Water spray, same standard as above .. 38

Propulsion

Sprays, type ..... Whirl
Igniter, Mark 6-3
Turbine clearance, nozzle to wheel, inches 0.060
Nozzles, conical, throat diameter, inches ..... L.P. 2 - 0.261
H.P. 2 - 0.261
3 - 0.303
Nozzles, working temperature, degrees F. 1550

Exhaust temperature at exhaust valves, degrees F., average 648
Turbine speed, R.P.M. ..... L.P. 8531 - H.P. 12123
Gear ratio, turbines to propellers ..... 8.98 to 1
Shaft H.P., developed in tank....
L.P. 102 to 105
H.P. 325 to 340
Forward propeller, diameter, inches 19
After propeller, diameter, inches 17.05
Forward propeller, pitch, inches ..... 35.5 L.H.
After propeller, pitch, inches .....34.4 R.H.
Propeller, R.P.M. ..... L.P. 950±20
H.P. 1350±20

Pressures (lb. per sq. in.)

Air flask, test (hydraulic) 4000
Air flask, working 2800
Reducing valve.....
L.P. 510-530 - H.P. 480-508
Nozzle, working
L.P. 475-495 - H.P. 445-473
Gyro nozzle, continuous spin 125

Buoyancy, Trim and Stability

Displacement (water 1.026 sp.gr.) pounds ..... 2516±20
Buoyancy, ready for war shot or exercise shot, negative, pounds ..... -669
Buoyancy, empty, with war head, or with exercise head not blown, negative, pounds ..... -163
Buoyancy, at end of exercise run (see "Table of Approximate Buoyancy Factors") 186
Center of gravity, from end of tail, inches:
(a) Ready for war shot 140.9
Ready for exercise shot 138.5
(b) End of war shot, head not blown 140.0
End of exercise shot, head not blown 136.5
Pull around, average, pounds 160

Note 1: Values in above tables for air flasks are based on forged type. Dimensions of air flask, weight of fuel, and capacity of fuel flasks are the same for either welded or forged flasks. Weights of air flasks, air charge and water, and capacities of air flasks and water compartments differ. Buoyancy, trim, and stability of torpedo with welded flask are slightly different than stated in the tables.

Note 2: The data in above tables are average values. Dimensional values vary by tolerances on the drawings. Torpedo weights and buoyancy will vary plus or minus 20 pounds; capacities, flow rates of air, fuel and water pressure, and temperature will vary in different torpedoes; but these variations are held within such limits that service and test requirements are not impaired.

Table of Approximate Buoyancy Factors, Torpedoes Mk 14-3A, 23, 23-1

Displacement (sea water 1.026 specific gravity) pounds ..... 2516±20
Fixed weight, all air, all fuel, 36 pints water expended, exercise head blown, 10 pounds of water remaining in head 1504
Maximum expendable weights (pounds):
Air 256
Fuel 28.5
Water, superheater 83
Water, ballast 414.5
Weight at beginning of exercise run ..... 3071±20
Approximate buoyancy, end of exercise run 160

DISTRIBUTION

Requests for additional copies of OP 635 (1st Revision), should be submitted on NAVORD FORM 1, ORDNANCE PUBLICATIONS AND FORMS REQUISITION, to the nearest Ordnance Publications Distribution Center: Navy Yard, Wash. 25, D. C.; Adak, Alaska; Mare Island, Calif.; Pearl Harbor, T. H.; Guam Island, Marianas; Manus Island, Admiralty Islands. Distribution Center mailing addresses should be obtained from List 10 nn of the Standard Navy Distribution List or from the reverse side of NAVORD FORM 1.

DISTRIBUTION:

Standard Navy Distribution List No. 27 (C) and 30 (R).

2 copies unless otherwise noted.

1. a, f, h-j, l; 2. j*, u; 3. mm, pp; 4. mm, pp; 5. b (London only); 7. f, h, k*, q*, x*; 7. (5 copies), b*, c*, l*, p*; 7. (10 copies), a*; 8. n (SPECIAL LIST F, X), y*; 10. f*, m*, hh, qq, ss; 10. (25 copies), nn*; 11. a (CNO); 12. a, b (Revision 1); 13. hh, nn; 14. a, q.

* Applicable Addressees.

16 Apr. 45/5500/1

☆U. S. GOVERNMENT PRINTING OFFICE: 1945—641318—108

[redacted]