The Pre-Torpedo Era

Inventions and U.S. Patents

Lots of Creativity / Little Practicality

(Patents granted by the USPTO from the late 19th Century to the Early 20th Century)

Charles R. Gundersen

Naval Undersea Museum
Keyport, Washington

May 2010

Revision B

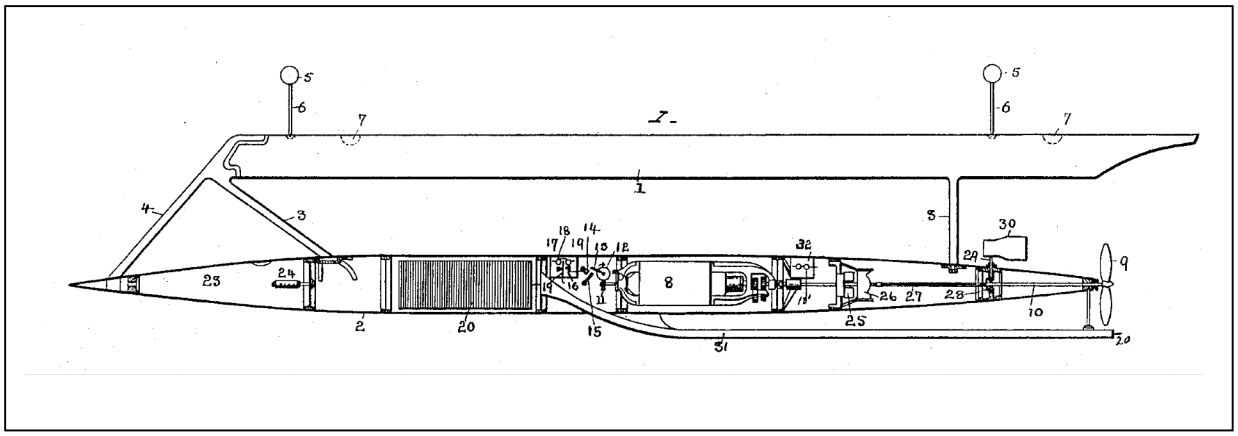

A publication of the

Naval Undersea Museum
1103 Hunley Road
Silverdale, WA 98315

The Pre-Torpedo Era

Table of Contents

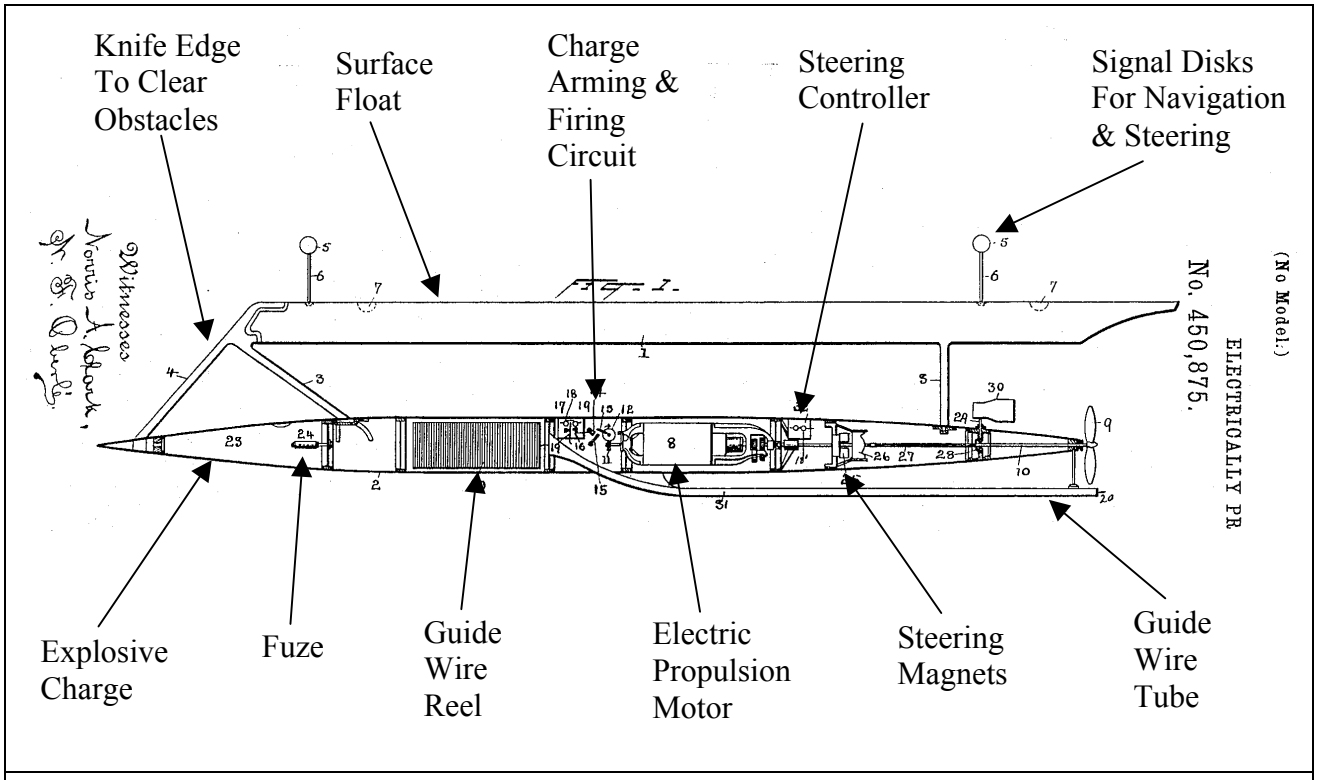

The Pre-Torpedo

The Pre-Torpedo Era
Inventions and U.S. Patents

Introduction

THE PRE-DREADNAUGHT era came to an end in 1906 with the completion of HMS DREADNAUGHT. Also, around this same time period the Whitehead torpedo began gaining a foothold as an in-service weapon, with the departure of the Howell torpedo. These events put an end to many wild schemes by numerous inventors who wanted a piece of the new torpedo market. Let's call this period of uninhibited torpedo invention activity the "Pre-Torpedo" era.

This work is a look back at some U.S. patents covering the time of the pre-torpedo. The ideas presented in these patents did not lead to actual torpedoes, as we know them today, and, as we shall see, many of the schemes patented were definitely not ready for prime time.

At the beginning of this pre-torpedo era are the Civil War Spar Torpedoes. Several inventors were granted patents for new and different ways to deploy them. And the wide acceptance of the Automobile Torpedo (exemplified by The Whitehead) ended this period of pre-torpedo thinking. In between is a transition period in the thinking of how to deploy, use, and mostly improve this weapon. So, in some respects many of the inventions presented here could be considered "missing links" between the Civil War Spar Torpedo and the Whitehead Automobile Torpedo. This thinking process is well represented in the many patents granted by the U.S. Patent and Trademark Office over the years. Let's see what they were thinking about.

The actual torpedo during this period turned out to be The Whitehead, with some contributions by John Howell and John L. Lay. But since these were on the road toward "real torpedoes" we won't bother with them. What is of interest here are the many patents offering to improve upon some of the perceived faults with The Whitehead, which is why so many of these patents use the word "improvement" in their title. Just what were they trying to improve? The Whitehead was new and innovative but did have its limitations. That is to be expected when developing such an expensive and rather complex weapon system. Some of the problems waiting for solutions included:

- In engines using compressed air, Carbonic-Acid, or other compressed gases as the energy source there was the need to prevent the gas from freezing the valves and piping as it expanded on its way from the storage reservoir to the engine. In these torpedoes the motive fluid is compressed to a liquid and stored under high pressure in the torpedo. Before admitting it into the engine it must be converted back to a vapor or gas at a reduced pressure. As the gas expands it cools everything to a temperature well below freezing. A device was needed to control the heating and expansion of the gas.
- Many customers, and other naval officials, thought it necessary to be able to steer the Whitehead torpedo toward its target. The problem was: What to do if the torpedo missed its intended target? In the heat of battle with ships all around, a loose torpedo was deemed as likely to hit one's own friendly ship as an enemy ship.

- Some torpedoes ran near the surface, with their fragile, spinning screws exposed, and were subject to counterfire from the target vessel once it became alerted to the presence of the incoming threat.
- The large targets, like new pre-dreadnaughts, had reinforced hull structures at their waterline, which might withstand the explosive effects of a torpedo's explosive charge. To be effective torpedoes needed to run deeper and strike the target near the keel.
- Straight running torpedoes (like The Whitehead and Howell) that could not alter their course were subject to set and drift from the tides and currents, which could push them off course. These could not be used in rivers or high tidal current areas.

Several other interesting patents also show up during this period and will also be discussed as they did lead to components in current use. Some patent ideas were definitely ahead of their time. These innovations include the snorkel, magnetic influence, and acoustic homing (Fido was not first).

Without giving too much away, the main features of many of the schemes granted patents during this time period were:

- Steerable from a rudder at the stern.
- Remote control of steering (guided by an external operator).
- An explosive charge suspended beneath a surface float to protect it from gunfire, impacts lower on the target's hull near the keel, and makes the whole device more stable and controllable in the presence of waves by its location under the float.
- Visual guidance to the target by sighting on vanes, disks, or lights mounted on the surface float.
- Self-propelled by a piston (reciprocating) engine using compressed gas as the motive fluid.
- Charge detonation by impact using a "percussion" fuze.

Few of the devices presented here made it into the water as actual or experimental weapons. And (with the notable exception of wire guidance) very few of these ideas made it into The Whitehead or follow-on designs leading toward the current crop of torpedoes. But these ideas do represent the thought process of many creative inventors and their contributions should be recognized. Even if one is left wondering *What Were They Thinking?*

This work results from a task to assist the Naval Undersea Museum, Keyport, WA, in identifying old documentation that was considered lost since the material did not have an accession number or other identifying information. Hidden in the back of one of the file drawers were copies of 43 U.S. Patents on torpedoes, dated as early as 1864. The reason they were accumulated is lost to history, but their find led to the idea that they represented what could be called "pre-torpedoes." Other patents on the same subject were found through an internet search (using the Google Patent web site) and from the book "19th Century Torpedoes and Their Inventors" by Edwyn Grey. Their story is presented here.

Patent # Inventor	Date Granted	Title
39,612 M.L. Callender	Oct. 16, 1862	**Improvement In Submarine Explosive Projectiles**

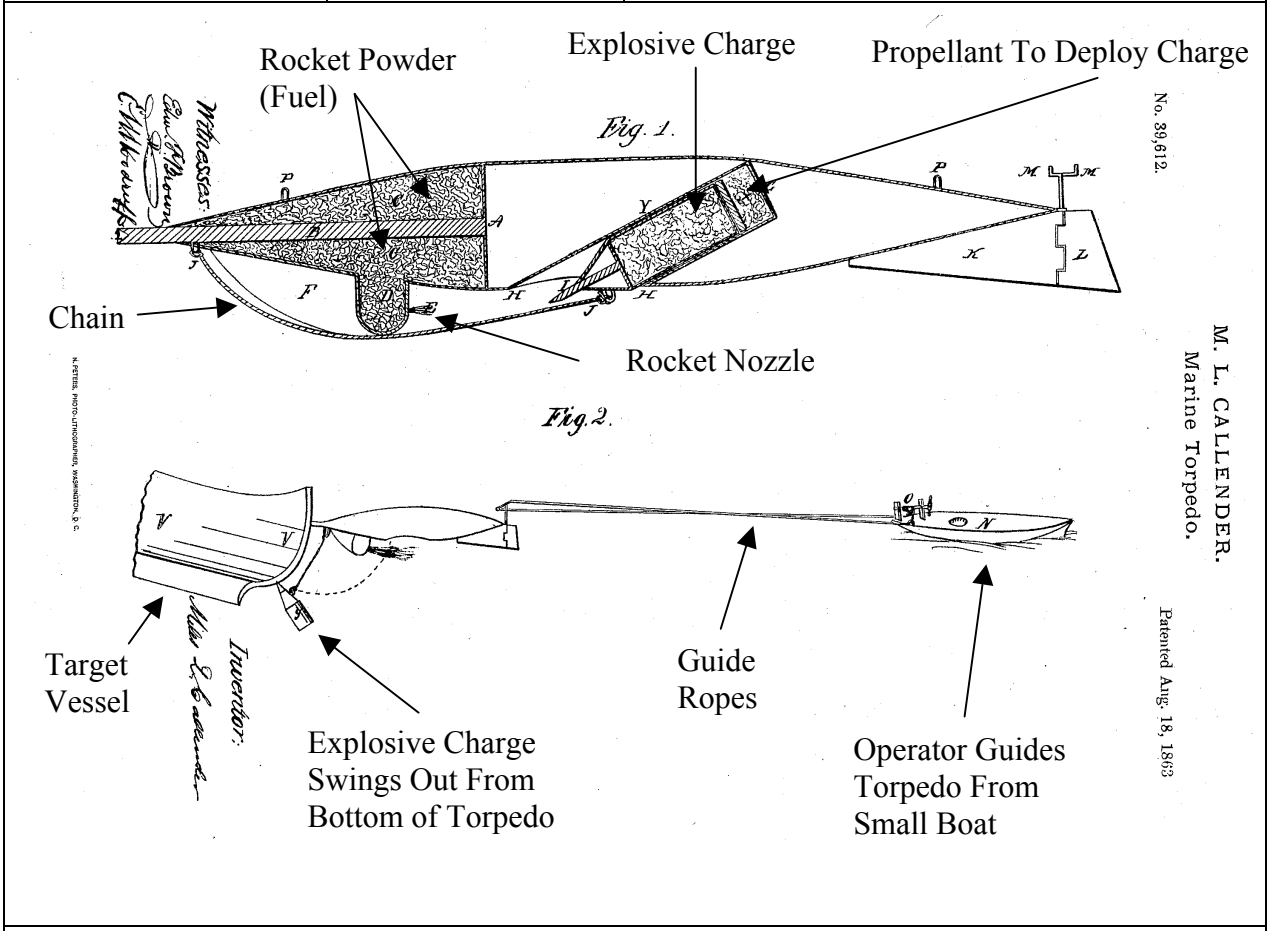

Water Rocket

39,612 M.L. Callender	Oct. 16, 1862	**Improvement In Submarine Explosive Projectiles**
This Civil War era patent describes a novel way to deploy a Spar Torpedo. The torpedo device is propelled "…by the combustion of compounds that form large volume of gases … acting directly as a reactionary force…" Sounds like rocket propulsion. The inventor would launch this machine from boat davits on the attacking ship (while underway to give it "initial velocity"), somehow lighting the rocket fuze before it gets wet. Steering is accomplished by rope guidance from a rider in a small boat towed by the rocket torpedo. Obviously, only strong rowers would survive this job as they attempt to flee the area following the attack. Upon impact with the target vessel a small propellant charge pushes out the main explosive charge, which swings down on the chain hitting (and penetrating into) the underwater hull and exploding. This puts the explosive charge below the protected waterline hull area.		
Advantages: It is an early remotely controlled (remotely steered) weapon. This device places the Spar Torpedo at a location on the hull where it will be very effective. Plus, the residual rocket fuel would add a little to the explosive effect.		
Disadvantages: The energy provided by the rocket must drag around the small boat and guide ropes, reducing effective range and speed. The near surface operations would make the vehicle subject to counterfire from the target vessel, when it becomes alerted to the presence of the incoming set of ropes "pulling" a small boat. The forces acting on the body of the device (drag, rocket propulsion, and guide line pull) are not well balanced. The result may be a severe pitch up attitude and possibly some airborne flight.		

Patent # Inventor	Date Granted	Title
41,112 J.D. Willoughby	Jan. 5, 1864	**Improvement In Submarine Explosive Projectiles**

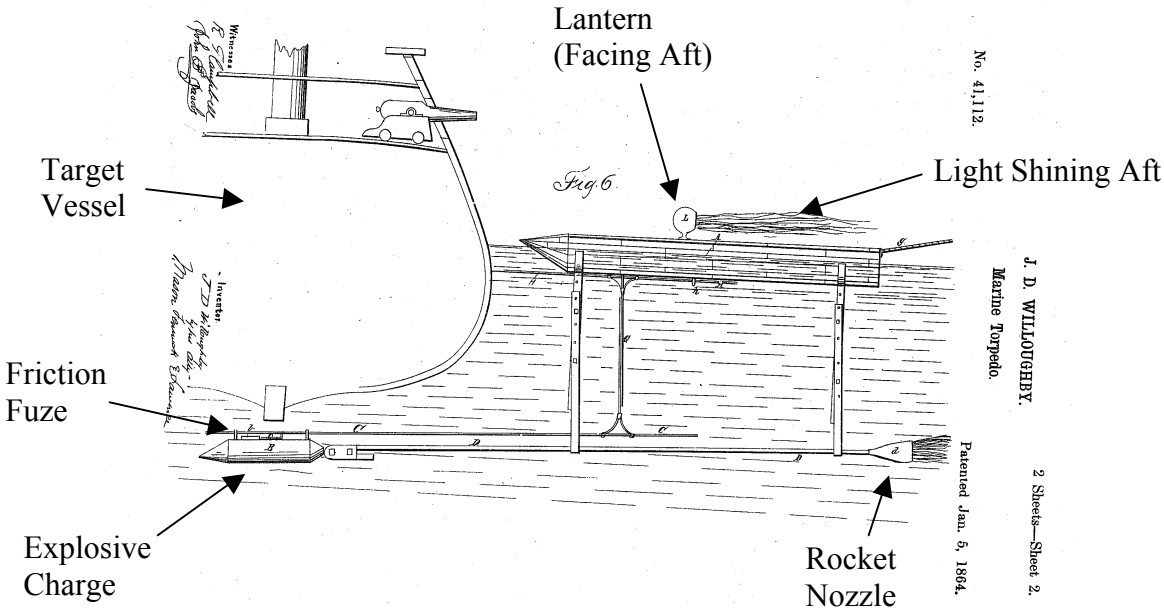

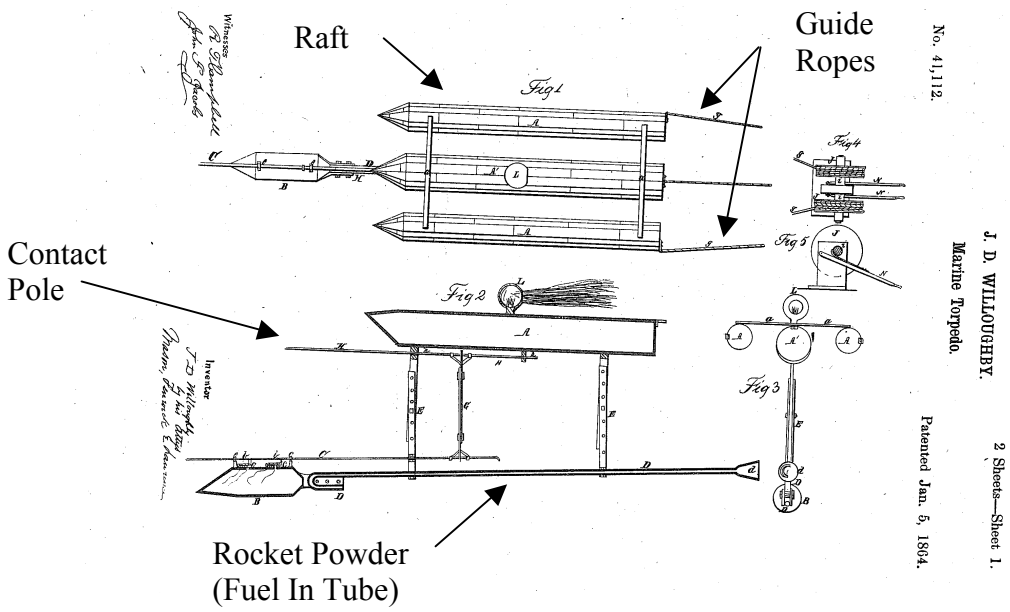

Traveling Torpedo

41,112 J.D. Willoughby	Jan. 5, 1864	**Improvement In Submarine Explosive Projectiles**
This is another rocket-propelled torpedo concept and is also rope guided. But in this arrangement the explosive charge is placed deep underwater, below the keel to further increase it effectiveness. It is essentially a Civil War-era Spar Torpedo suspended below a raft (a two-part configuration with a float above a spar pole containing an explosive charge on the end). It is rocket propelled from a rocket motor mounted on the submerged spar. The contact pole, sticking out the front end of the device, strikes the target's hull and is thrust backward to activate the contact fuze (friction fuze). Visual guidance, from the launching craft, is accomplished by sighting on one aft-facing lantern installed on top of the raft (for night ops only). Limited steering maneuverability is provided by port and starboard guide ropes payed out from reels on the launching craft. The inventor claims that this device would be useful where the target "vessels are inaccessible, or where it would be deemed unsafe and impracticable to attack them with the ordinary means." Here the inventor might be thinking of attacks within protected harbors or river estuaries.		
Advantages: Places warhead under the keel (optimum location). Preferred use is at night to reduce detection (assuming the wake from the rocket gases remains underwater).		
Disadvantages: Needs to be rigged for deployment like a life boat using davits. During assembly it needs to be "tuned" to the target's hull shape (draft and width). Target may be alerted to incoming raft and can apply counterfire (if daylight ops). Potential difficulties with the controlled burning underwater of the "rocket powder." Fuze could be triggered by floating debris or logs hitting contact pole. Need to drag along the two guide ropes. The geometry shown in the sketch also has unbalanced forces with the possibility that the explosive charge could broach the surface.		

Patent # Inventor	Date Granted	Title
47,776 W.W.W. Wood J.L. Lay	May 16, 1865	**Improvement In Submarine Explosive Shells**

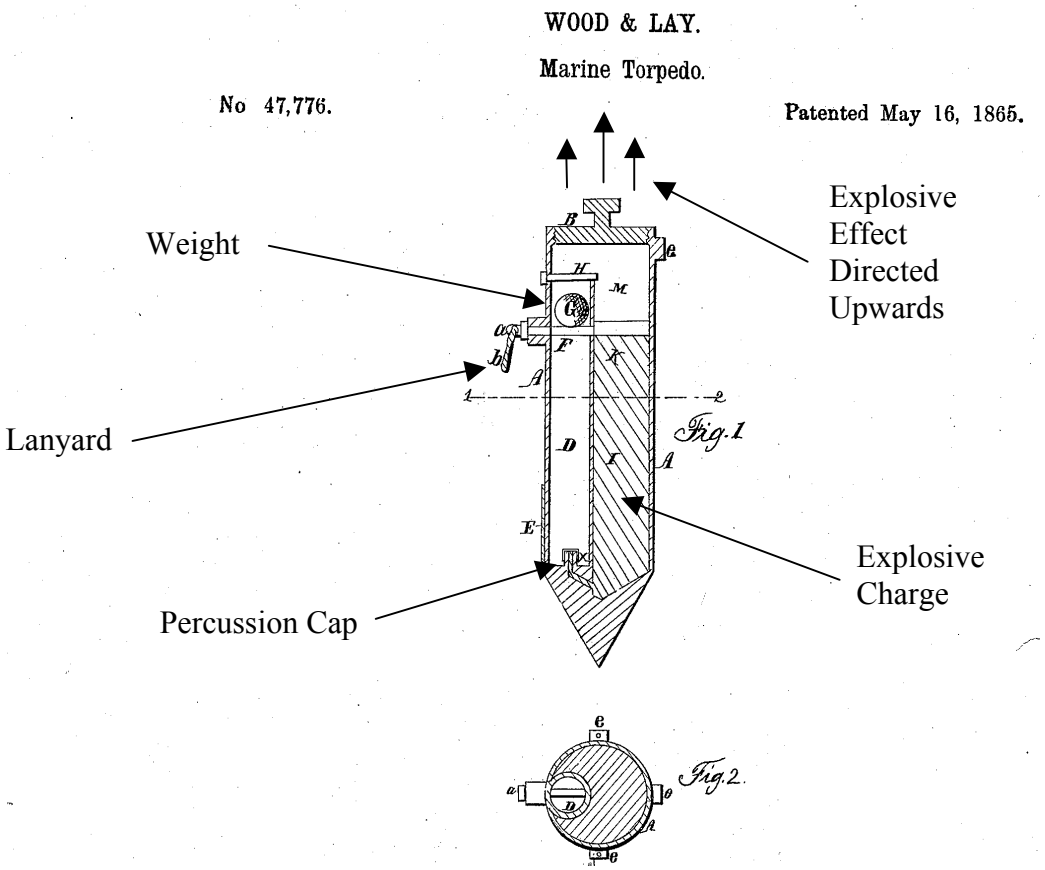

47,776 W.W.W. Wood J.L. Lay	May 16, 1865	**Improvement In Submarine Explosive Shells**

This patent covers a rather novel concept to detonate a charge by having a weight drop on a percussion cap (a metal ball weight is released by pulling out a pin). To set off this charge one must pull the pin with a long lanyard extending from a control site or launching craft out to the explosive charge.

The device is shaped like an artillery shell with the long axis kept vertical to allow room for the ball's motion. But it is mounted in the horizontal orientation when deployed from a spar boom for ease of use and placement under the hull of the target ship. Then another lanyard is pulled to rotate the device vertically.

The patent just describes an explosive device on the end of a spar boom, so no self-propulsion, guidance, aiming, tracking, or other means to get the device out to the target is discussed (the inventor claims these are covered in another patent). But any vehicle carrying this shell as a warhead would have to get extremely close to the hostile target, to allow the operator to lower the boom and pull the proper lanyards to realize an explosion.

The inventor claims the force of the explosion is directed upward, so the device must be placed directly under the target's keel.

This patent is included because of its historical significance. Several of these were built and deployed during the Civil War, most notably my LT William Cushing, USN. On the night of 27 October 1864 he brought his steam launch up over the protecting log booms surrounding CSS ALBERMARLE and thrust the spar under the hull. The resulting explosion sunk the Confederate ram.

Advantages:

Produces a most destructive effect by having an upward directed-explosion set off just under the target's keel.

Disadvantages:

Placing the device under an uncooperative target. Pulling the lanyard in the presence of counterfire from the target. Lanyard could get fouled and pulled prematurely.

Patent # Inventor	Date Granted	Title
48,124 J.D. Willoughby	Nov. 25, 1864	**Improved Device For Steering Boats From Another Boat**

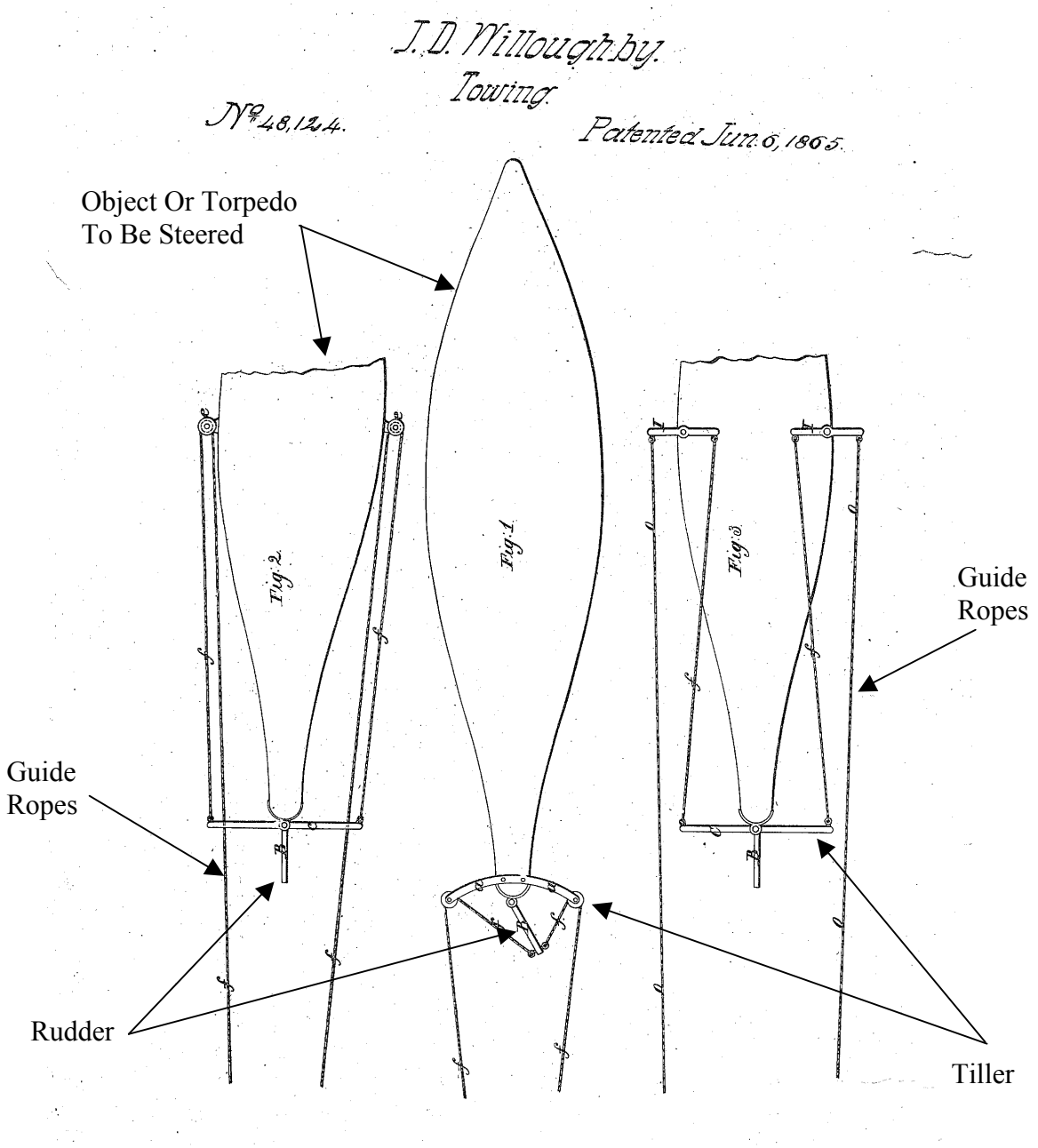

48,124 J.D. Willoughby	June 6, 1865	**Improved Device For Steering Boats From Another Boat**
This patent covers a remote steering mechanism, and describes a means to steer an unmanned craft. One of the uses, as stated in the patent, is "blowing up an enemy's vessels." Steering is by two ropes ("some miles long") wound on reels at a launching or control station. The loose ends being tied to the torpedo's tiller arm to turn the rudder. Several different arrangements are described. Steering is by retarding one of the ropes with a friction brake on the reel to turn the rudder in the desired direction.		
Advantages: Provides directional control. Pulling either lanyard and the craft turns in that direction. Good control when directly behind object to be steered.		
Disadvantages: • Must drag around the entire length of both guide ropes. • Guide ropes will be longest – and could produce uneven tensions causing the craft to go off course – at critical terminal homing when fine control is most important. • Retarding one of the guide ropes to turn the torpedo will slow it down. • Paying out the two guide ropes at the proper speed is critical to maintain even tension in both lines in order to make the craft go in a straight line or in a constant turn (yaw rate). • Can't let the lines go slack and foul.		

Patent # Inventor	Date Granted	Title
121,052 J.A. Howell	Nov. 21, 1871	**Improvement In Propulsion Of Marine Torpedoes**

John A Howell's
Improvement in Marine Torpedoes

No. 121,052. Patented Nov. 21, 1871.

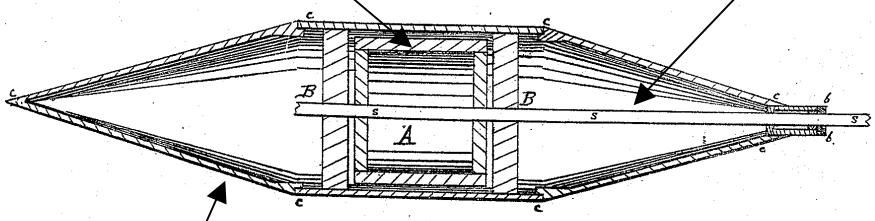

Inventor
John A. Howell

Witnesses
Samuel Timmel
A. G. Henderson

121,052 J.A. Howell	Nov. 21, 1871	**Improvement In Propulsion Of Marine Torpedoes**
This may be John Howell's first U.S. Patent granted on his flywheel concept to drive a self-propelled torpedo. The flywheel is spun up "by any power extraneous to the torpedo." Howell states that the flywheel acts as a "repository of power," the spinning itself could be considered "fuel." And the patent describes the benefits of using the gyroscopic effect of the spinning flywheel ("the inertia of the revolving wheel") for torpedo stability and "to the counteracting of deviating forces." The diagram shows the axis of the flywheel being in line with the axis of the craft (i.e., fore/aft). But also states, more importantly, "… in order to change its direction when in the water, the axis of the fly-wheel should be perpendicular to the longitudinal axis of the torpedo."		
Advantages: You get two-for-one using the flywheel concept – motive power and stability control. It would produce a quiet vehicle, but that did not matter in the days before sonar.		
Disadvantages: As the flywheel slows down so does the speed of the torpedo, unless a complex means is found to change the pitch of the propeller to compensate for the reduced speed. Also, this concept becomes less efficient as the size of the torpedo increases. In this patent Howell has the axis of the spinning flywheel parallel to the axis of the torpedo, something he changed by 90° in later patents.		

Patent # Inventor	Date Granted	Title
125,039 J.G. Foster	Mar. 26, 1872	**Improvement In Electro-Magnetic Apparatus For Steering Torpedo Boats**

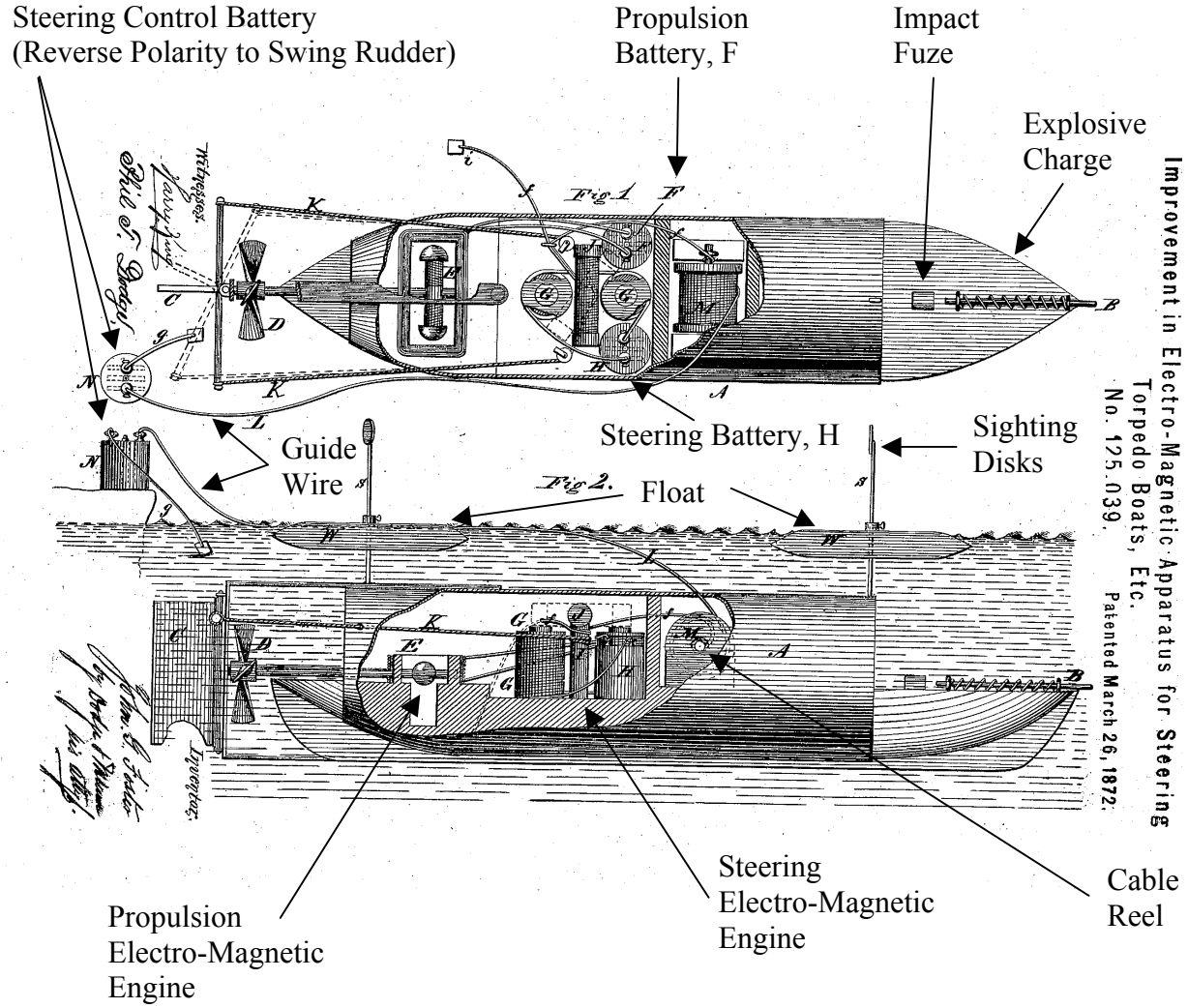

125,039 J.G. Foster	Mar. 26, 1872	**Improvement In Electro-Magnetic Apparatus For Steering Torpedo Boats**

A remotely controlled electrical steering device, using a guide wire, is described in this patent.

The device is used on a torpedo that explodes on contact when a sliding rod strikes the hull of the target and is forced back to detonate an explosive charge.

The torpedo can travel on the surface or underwater, when suspended from two small floats by rigid struts of sufficient length to insure the torpedo is operating at the proper depth. Visual guidance to the target is by observing sight vanes (daytime) or light from shielded lanterns (nighttime) mounted on the upper ends of the two rigid struts.

The torpedo is driven by a screw propeller that is powered by "an ordinary electro-magnetic engine" from the energy stored in an onboard battery.

The steering device is another electro-magnet that swings a metal rod back and forth, depending on how the polarity is changed at a battery located on shore or at a control station. When a positive current activates the electro-magnet, the rudder swings in one direction. But when the operator on shore switches the wires around at the terminals of the battery, a negative current is sent to the electro-manget and the rudder swings the other way. Apparently when one of the wires is removed from the battery the rudders will return to amidships. The cable windings on the rod are connected to the shore battery with a single conductor wire and a seawater return. A spool in the torpedo pays out this conductor wire as the torpedo maneuvers. As the rod swings, chains pull on the rudder to shift its position. Since the rod is operated by an electro-magnet, it swings all the way in one direction or all the way in the other direction (called a "bang-bang" controller).

Advantages:

The operator guiding the torpedo is at a safe distance away. Electricity is used to both drive and control the torpedo. This method produces reliable rudder movement (without the need to pull ropes). The cable is not pulled along by the torpedo but is payed out from within it, greatly reducing drag. By using seawater for one leg of the circuit, the amount of wire needed is cut in half.

Disadvantages:

- Bang-bang rudder control (full left or full right rudder).
- Wires at the shore-based battery terminals must be reversed to change the torpedo's direction. One of the wires must be removed from the battery terminals to have the torpedo go straight.
- Reliance on different sets of batteries for (1) energy to drive propulsion motor, (2) keep steering electro-magnet operating, (3) provide steering direction control from shore. It would be better if the energy could come from one power source.
- Torpedo must be within visual range all the way to the target for guidance.
- Target may be alerted to the presence of the torpedo by observing the floats or sight vanes and can apply counterfire.

Patent # Inventor	Date Granted	Title
134,493 H.J. Smith	Dec. 31, 1872	**Improvement In Submarine Torpedoes and Boats**

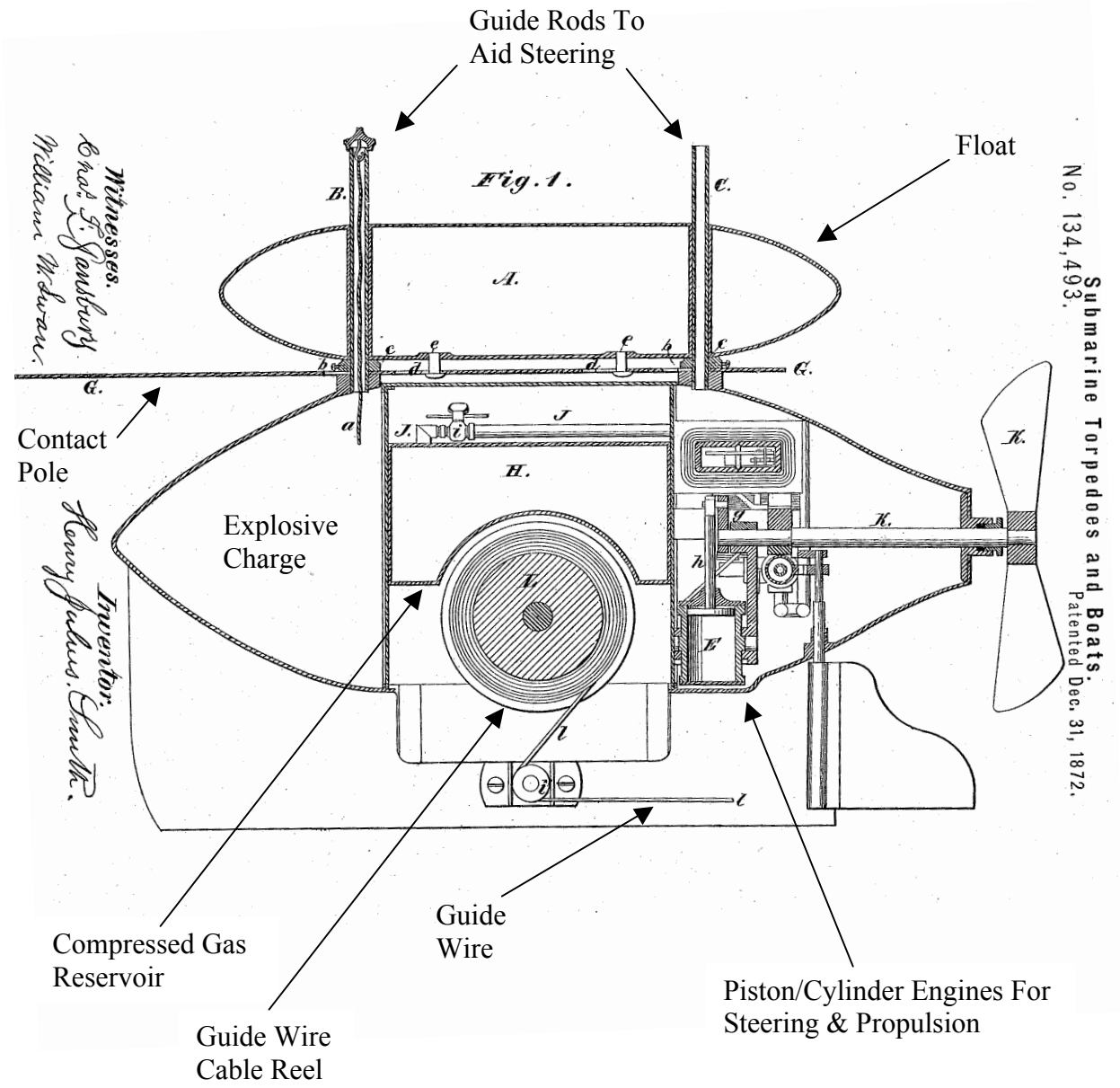

134,493 H.J. Smith	Dec. 31, 1872	**Improvement In Submarine Torpedoes and Boats**

This patent covers the process of explosive charge detonation as the torpedo impacts the target.

The vehicle described is in two parts consisting of a float (to provide positive buoyancy) and the torpedo device suspended below it (heavy and negatively buoyant). The torpedo device rides near the surface just under the float. The device must be tuned to the target's hull size and shape during assembly before launch.

A contact pole between the float and torpedo strikes the target's hull and slides backward releasing the float from the torpedo. The separation between the float and torpedo pulls a short lanyard, which operates a friction primer (fuze) to detonate the charge.

Details of how the devise is self-propelled and navigated are described in another patent. But it is stated that internally stored compressed air (or ammonia) provides the energy source for propulsion and steering is accomplished through the action of pistons operating in cylinders. The gas drives a piston and crankshaft arrangement to turn the propeller shaft for propulsion and drives a novel rack and pinion mechanism for steering control. But this does not seem to be the main point of the patent.

Note: The text contains a discussion about having seawater supply heat to the compressed gas and that the compressed gas reservoir is called a boiler: "The sea-water takes the place of the fire under an ordinary steam boiler" (this concept is used to keep the valves from freezing due to the rapid cooling of the gas as it expands when exiting the high-pressure gas-storage reservoir).

The patent does not cover launch, aiming, or guidance to the target. But it makes a general statement that a guide wire is payed out from a spool in the device for remote steering control. An operator watches the progress of the float and guide rods to steer the torpedo to the target.

Advantages:

Places explosive charge at a low depth near the keel just prior to detonation.

Disadvantages:

Torpedo device runs at the surface with 2 pipes sticking above the surface, which could alert the target.

Cumbersome launch procedure.

Patent # Inventor	Date Granted	Title
158,501 H.F. Knapp	Jan. 5, 1875	**Improvement In Torpedo Boats**

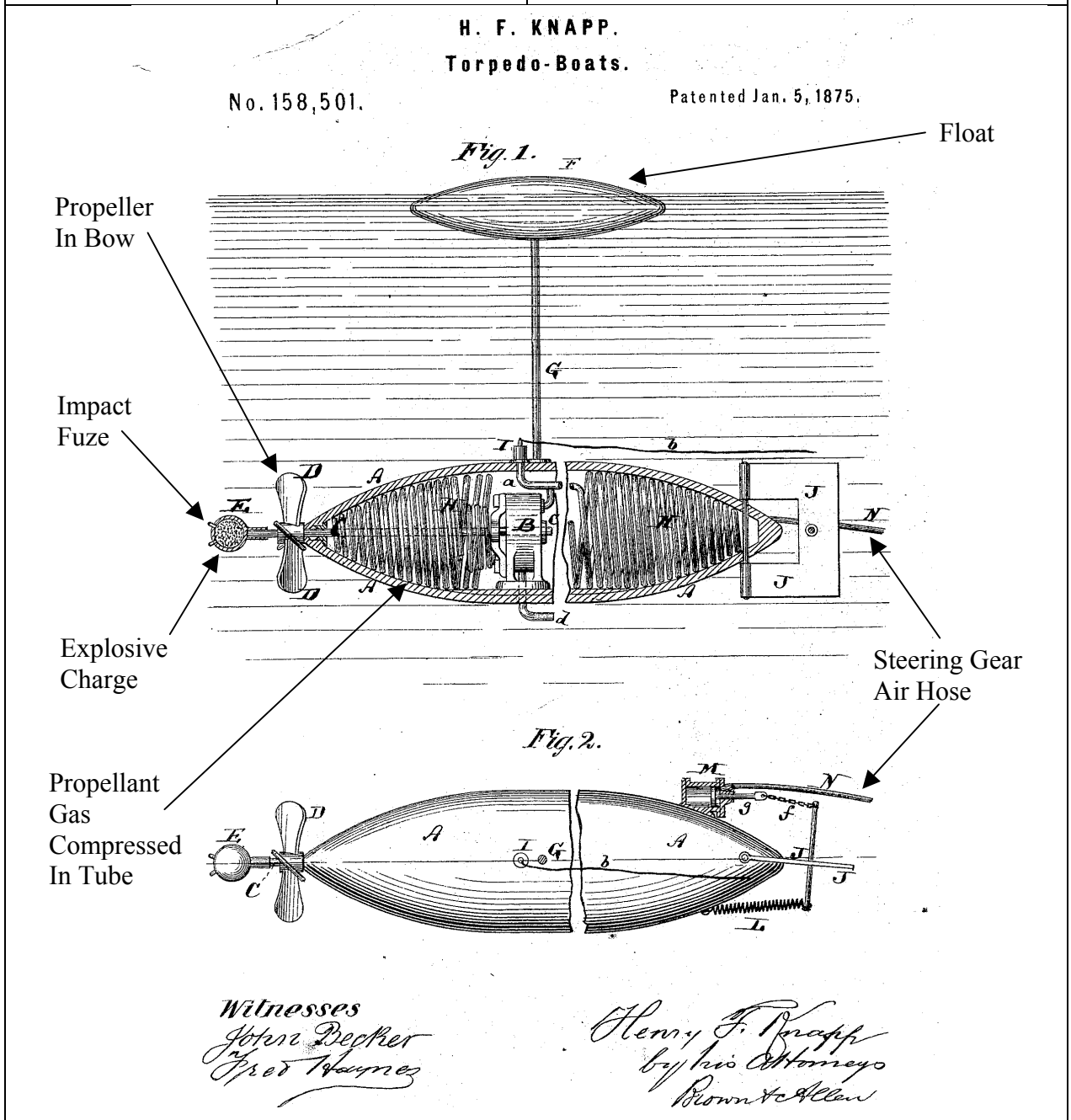

158,501 H.F. Knapp	Jan. 5, 1875	**Improvement In Torpedo Boats**

Described here is another two-piece mechanism with a float positioned above a torpedo device. The float rides on the surface to provide depth control for the torpedo. A rigid pipe connects the torpedo to the float.

This weapon is self-propelled by an engine and propeller arrangement - with the propeller oddly placed in the bow ("to insure a straight and direct course" on short runs). Energy to run the engine comes from compressed gas stored in a long tube wound around the inside of the hull. A means is provided to start the engine (initiate combustion of the compressed gas to increase pressure and volume of the working fluid). The nature of the engine and how it uses the gas combustion products are not described.

An explosive charge (a "percussion cap") is placed on the propeller shaft in front of the propeller and detonates on impact with the target's hull. The percussion cap is not supposed to rotate on the propeller shaft, probably to avoid wasting energy that should go toward rotating the propeller.

Guidance is again by watching the progress of the float as it moves toward the target.

Much discussion centered on the version of this device with a rudder and how it could be controlled from shore or the launching platform. The rudder is rotated in one direction by the action of a spring and rotated back the other direction by a cylinder and piston arrangement. The piston is driven within the cylinder by forcing air into the end of the cylinder to push the piston in a direction that overpowers the action of the spring and moves the rudder in the other direction. The air is supplied by a hose extending back to the launching craft or other control station where an air compressor needs to be maintained. Thankfully, a rudderless version is also envisioned.

Advantage:

Places the explosive charge directly against the target's hull. Variable angle steering is possible (the rudder does not have to swing until it hits the stops, but can be positioned at any angle).

Disadvantage:

- The launch process seems very complicated, (1) adjust the vertical distance between float and torpedo, (2) start gas combustion, (3) and start the air compressor. Note: The lag time between when the compressor is activated and when the rudder finally responds would be so great as to make this device uncontrollable as it wanders aimlessly about in the water. This is because air is very compressible and it would take quite some time to build up a strong pressure pulse that could propagate down the hose to the rudder control cylinder, and by then the operator would surely want to steer in another direction.
- The device must drag this hose around with it as it moves. As the amount of hose dragged around increases so does the force acting on the cylinder, which is mounted on the side of the vehicle. And this force is off-center, which puts a turning moment on the vehicle tending to make the vehicle always want to turn in one direction.

Patent # Inventor	Date Granted	Title
211,301 J.L. Lay	Jan. 14, 1879	**Improvement In Torpedo-Boats**

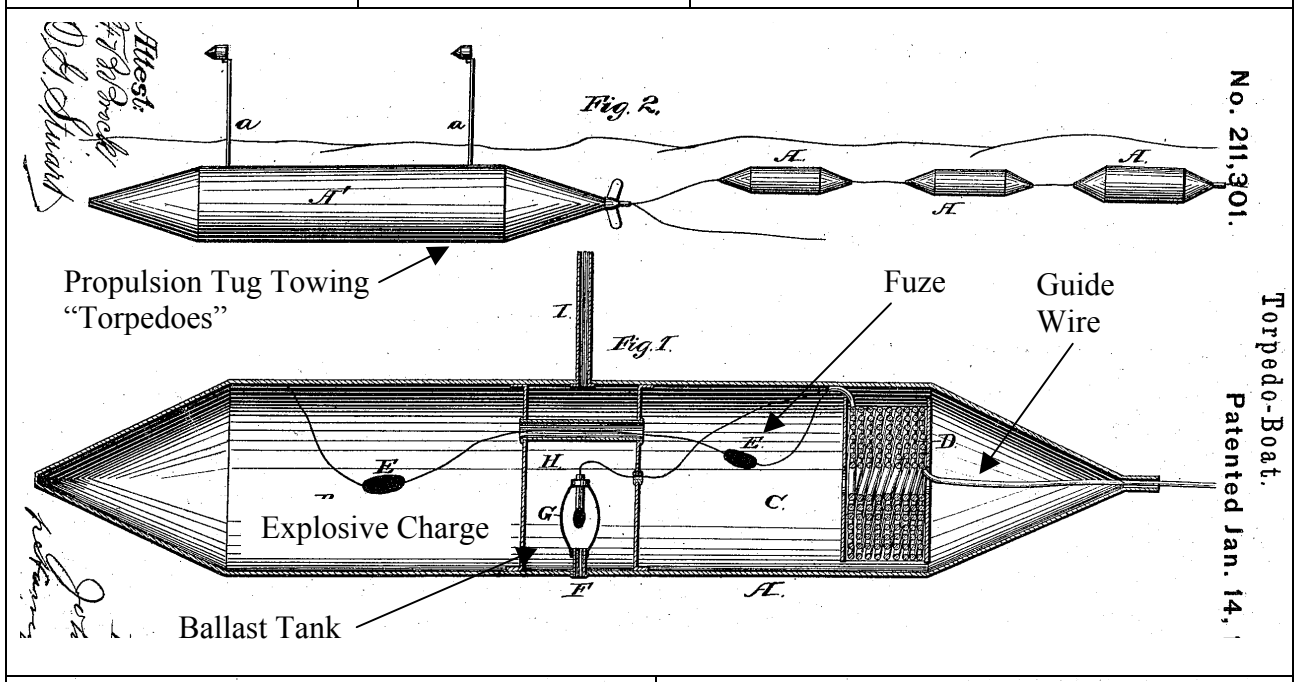

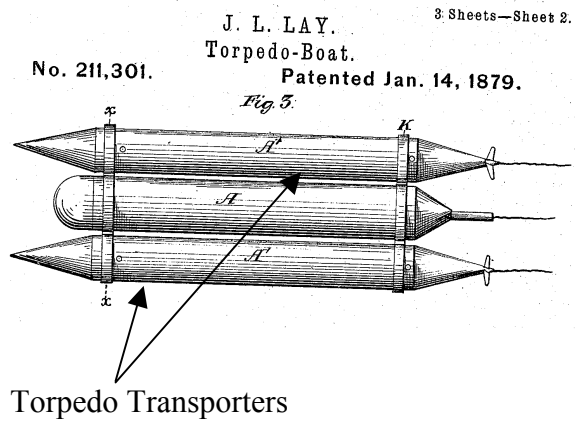

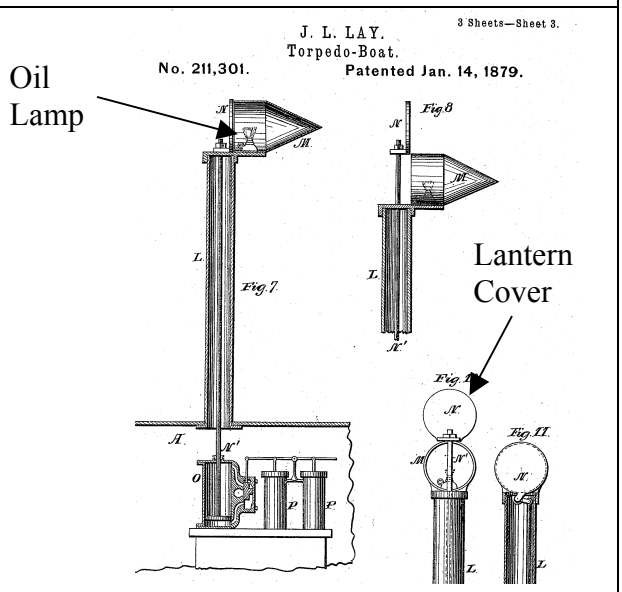

Lanterns for nighttime guidance of torpedoes

211,301 J.L. Lay	Jan. 14, 1879	**Improvement In Torpedo-Boats**

A shallow-water torpedo is described that is remotely controlled by an electric wire payed out from a spool in the torpedo's aft compartment. The torpedo is self-propelled by an engine with the energy coming from compressed air or gas stored within the torpedo.

The torpedo described contains a dual set of shielded, aft-facing, lights, "not easily extinguished," for guidance and control at night, which are mounted on posts protruding up out of the water. These become guide rods for daylight operations. The patent describes the operation of a cover (by a gas operated piston and cylinder arrangement) used to conceal all light coming from the guide lanterns, when needed.

The device contains a floodable ballast tank to submerge the torpedo when it reaches the operating site (the compartment may be flooded by blowing away a rubber cover with a fuze or cap). This device seems more like a mine that is driven out to a site and sunk where it waits for a passing ship before exploding.

The explosive charge, "which may be ignited by a spark through the cable," is detonated remotely by sending a voltage / current spike down the cable.

The multi-conductor cable contains wires to scuttle the device, set off fuzes in the explosive charges, operate the lantern covers, release the torpedo from a nest of propulsion units, and other unspecified actions to control the craft's motion. (The inventor states he will not discuss all the wires in the cable or what they do as "such being well known in the art." Neither propulsion nor steering is addressed.)

Finally, there is a discussion about the nesting of the torpedo with floats and the releasing of the torpedo (mine) from multiple propulsion units.

Advantage:

- Rather stealthy at night when guide lights are covered.
- Flexible configuration as explosive charge could be contained in propulsion unit (torpedo) or towed (mine).

Disadvantage:

- Operates more like a movable mine rather than a maneuverable torpedo-boat.
- Guide rods protruding above the surface will alert the target during the day and invite counterfire.
- Too dependent upon a wire bundle to operate various onboard mechanisms. The cable would be heavy and bulky and have to be dragged around by the Propulsion Tug.
- An air valve to vent air from the ballast tank is expected to work following detonation of the rubber cover just above it.

Patent # Inventor	Date Granted	Title
211,302 J.L. Lay	Jan. 14, 1879	**Improvement In Torpedo Boats**

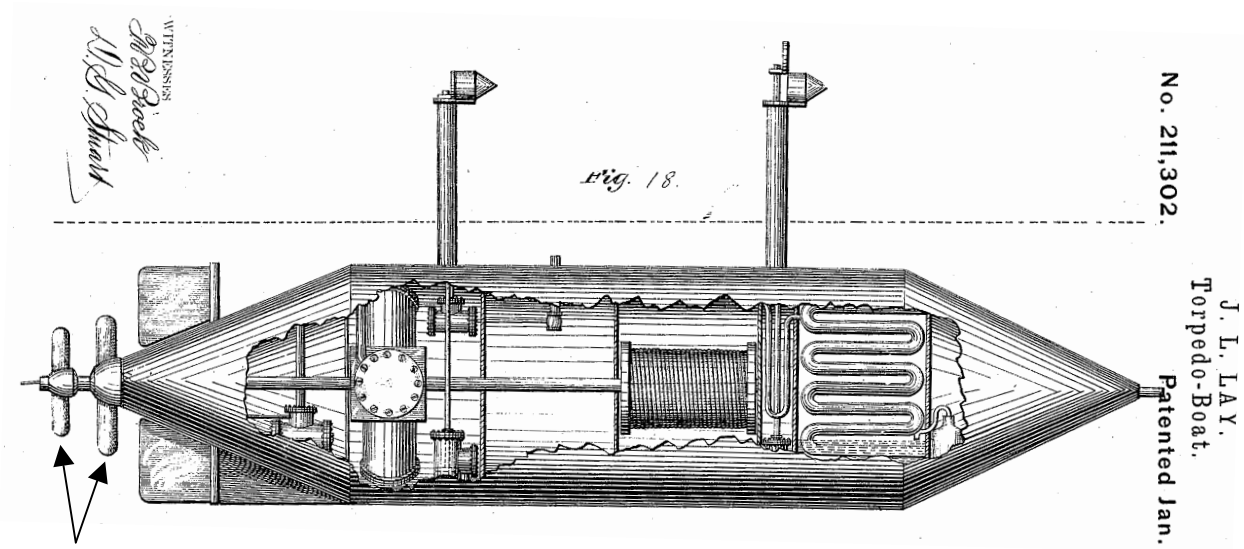

Contra-Rotating Propellers

Guide Disk Turned To Minimize Profile To Target

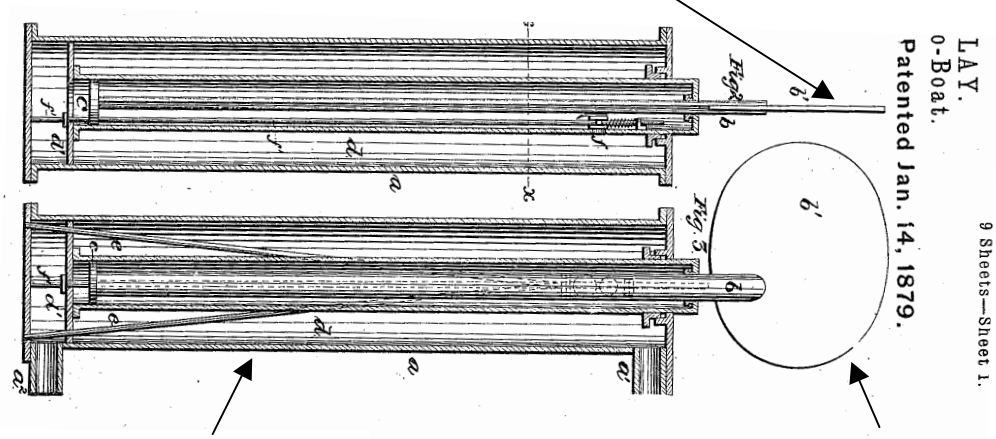

Telescoping Guide Rods

Guide Disk Rotated To Face Operator

211,302 J.L. Lay	Jan. 14, 1879	**Improvement In Torpedo Boats**

This patent was applied for while John Lay was in Russia, marketing and making torpedoes for the Czar. It contains design improvements to a number of existing torpedo mechanisms, but no new overall torpedo concept is presented. The areas he describes all relate to self-propelled, wire-guided torpedoes and consist of the following:

- Providing a hollow propeller shaft to allow the guide wire and combustion gasses to pass through on their way overboard. The gases are to "ease the movement of the cable" through the shaft.
- Making the sight rods telescopic and, when extended to their full height, making them rotate 90°. Before rotation the vanes are in a fore and aft orientation, presenting a minimum view toward the target ahead. When rotated 90° the highly visible vanes can be easily seen by the operator behind the vehicle on the shore (but this could also alert the target to the incoming threat!)
- Furnishing a brake for the guide wire when the torpedo is at rest (and the gas flow in the engine is stopped) so the wire does not freely rotate off its reel.
- Warming the gaseous fuel, so it doesn't freeze the pipes and valves upon being released from the high-pressure storage bottle on its way into the engine inlet. Here the gas is piped through a tank partially filled with a combustible liquid, which is torched off (to burn freely) at engine start up. A modified "warmer" is also described that even produces superheated gas (which would be great if the engine could tolerate it).
- Incorporating a ballast tank that can be automatically filled and emptied in order to maintain a given depth upon receiving the proper electrical signals. This is not related to devices that control the depth of a moving torpedo through the action of diving planes (or elevators).
- Altering the tail shaft to add a second contra-rotating propeller. This is accomplished by using three bevel gears that are driven by the single engine shaft rather than using two different propeller shafts (one driven by the engine's internal rotating components, direct <u>action</u> from the gas expanding in the engine, and one driven by the engine's external components, the <u>reaction</u> of the engine's structure to the expanding gas). In the scheme presented here the engine's reactive forces would just tend to apply a rolling moment to the hull (tending to heel (list) it over to one side).

Other features related to torpedo operations that can benefit from this patent include:

- Having the battery that powers the various electro-magnets that control torpedo functions located on shore.
- A gas engine using "carbonic-acid gas (carbon dioxide, CO_2, and water), ammoniacal gas (ammonia, NH_3), or compressed air" as the working fluid.
- Allowing the sight rods to be lowered beneath the surface until needed to navigate the torpedo to the target.

Patent # Inventor	Date Granted	Title
211,303 J.L. Lay	Jan. 14, 1879	**Torpedo-Boat**

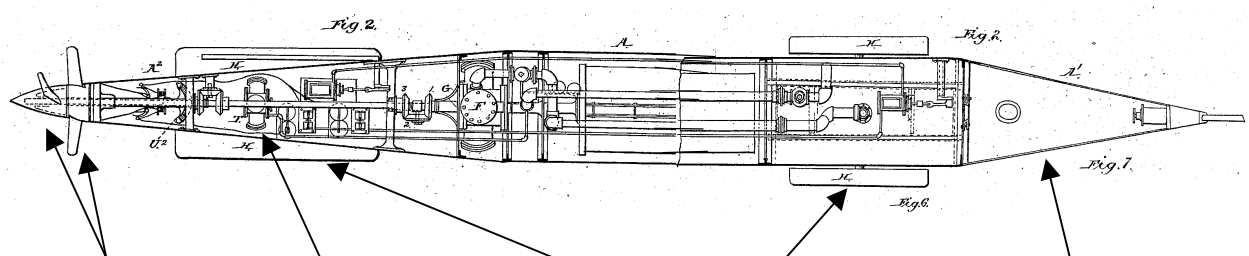

Top View

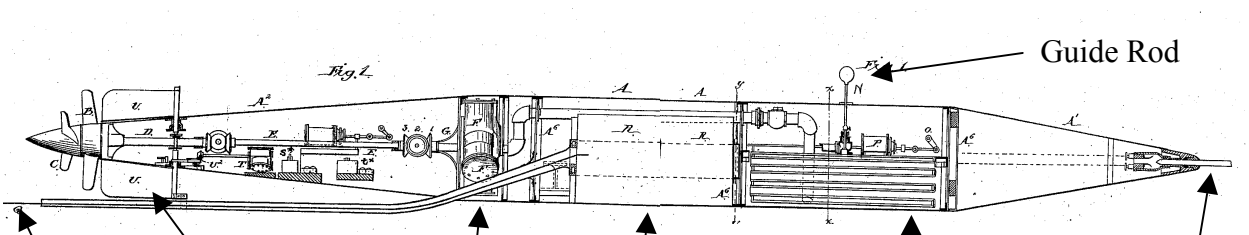

Side View

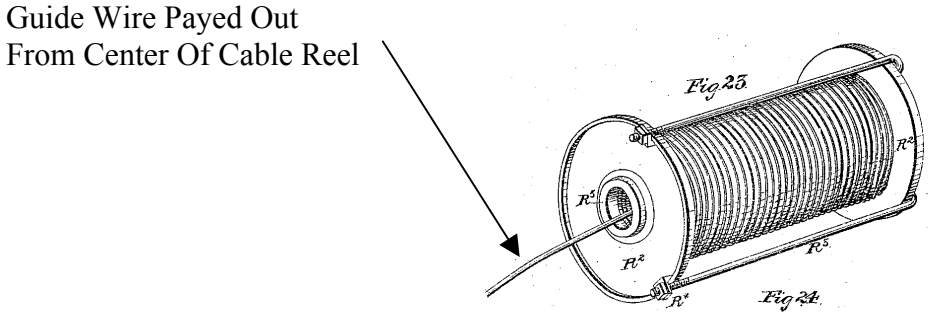

211,303 J.L. Lay	Jan. 14, 1879	**Torpedo-Boat**

In this patent John Lay pulls together many of his previous technologies in an attempt to arrive at a single-hulled device. This general concept for a torpedo consists of a remotely controlled (wire guided), self-propelled, impact-detonated device equipped with sight vanes to drive it to and from (if reattacks are needed) the target.

Here Lay covers some new ground and rehashes some old ideas:

- The preferred fuel is "ammoniacal gas" (ammonia, NH_3) compressed to the liquid state for the compressed gas reciprocating piston engine, although "carbonic-acid gas" (carbon dioxide, CO_2, and water) or compressed air will do.
- The engine drives two contra-rotating propellers from two drive shafts, one within the other, geared to rotate in opposite directions by the three bevel-gear scheme.
- Twin diving planes are in the bow (like canards on an aircraft) for depth control. These are pre-set externally, before launch, based on trim tests.
- Sight rods, fore and aft, are used to navigate the craft, with the capability to blow up some balloons for better visibility. Aft facing lanterns are used for night operations. The capability to blast a water jet in the air to aid in navigation and tracking is also mentioned.
- Wire guidance is assumed, but now a more mature approach is offered: (a) the wire deployment tube passes out the stern under the rudder and propeller, (b) the guide wire spool axis is longitudinal in the torpedo, and (c) the wire is payed out from the center of the spool. However, the inventor leaves out one important aspect of this approach, the need to back twist the cable upon initial winding of the deployment canister (see patents 3,272,455 of Sep. 13, 1966, and 2,639,873 of May 26, 1953 "…to pre-twist the wire as the coil is being wound, this pre-twist being in the opposite direction to the twist which will be placed in the wire as it is payed out.")
- Steering is provided and controlled by signals in the guide wire (current of one polarity moves the rudder in one direction and reversing the polarity swings the rudder over in the opposite direction).
- The explosive charge is set off by impact (electrically initiated as a sliding rod makes contact to complete a firing circuit) or the circuit can be completed by a remote control signal sent down the guide wire. A safety device is incorporated to avoid accidental activation.
- The use of two pressure-reducing valves to lower the pressure of the working fluid before it enters the engine.
- A ballast tank is used (filled) to compensate for the consumption of the propulsion gas.
- A detachable explosive charge, to enable the warhead to explode below the target's armor belt or nearer to the keel, is offered.
- The shore control station is provided with a feedback signal on the position of the rudder.

To allow for the guide wire to be payed out from the center of the cable reel, the inventor has devised a process to disassemble the central portion of the reel following winding of the cable on it.

Patent # Inventor	Date Granted	Title
219,711 W. Giese	Sep. 16, 1879	**Improvement In Submarine Torpedoes**

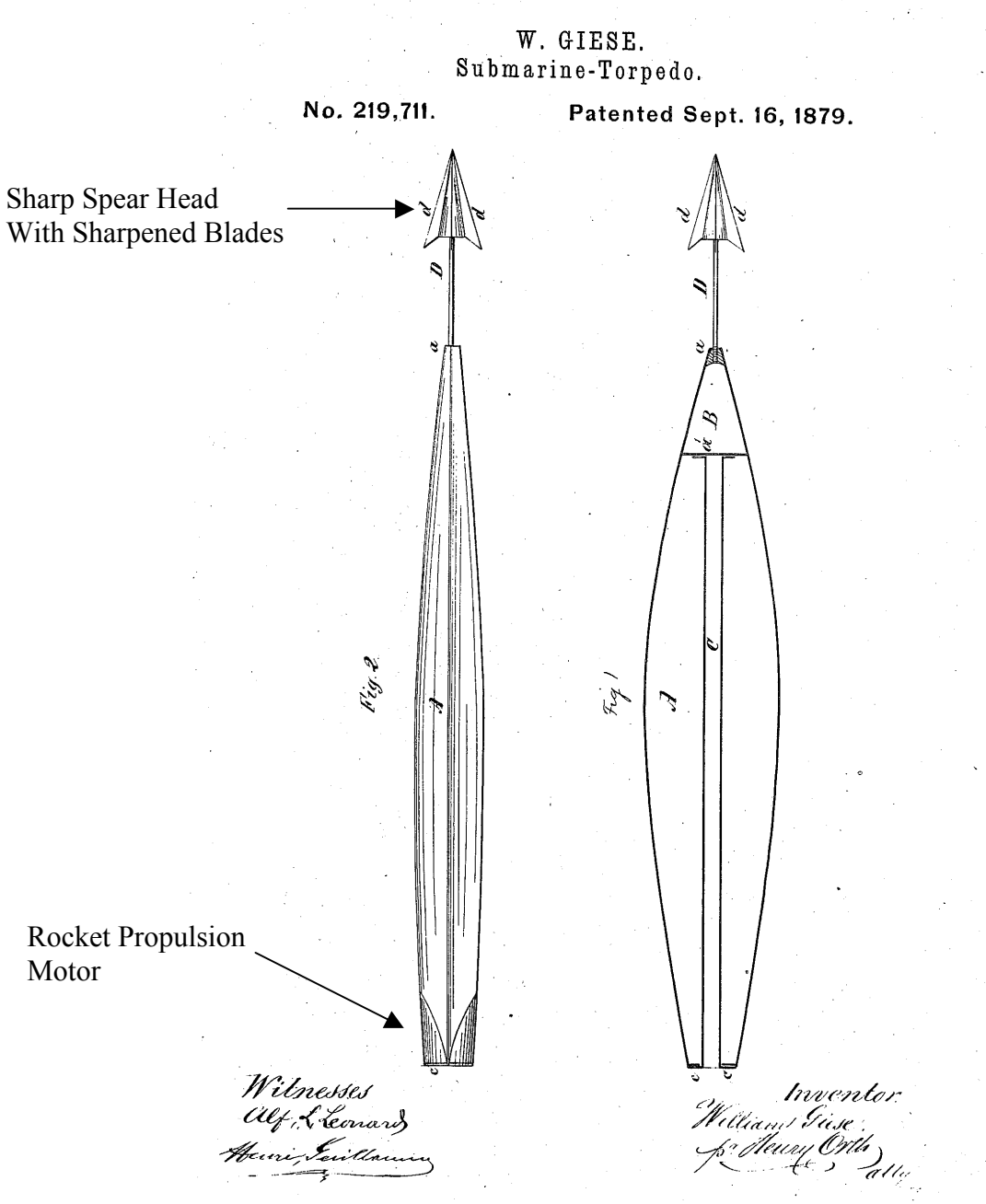

219,711 W. Giese	Sep. 16, 1879	**Improvement In Submarine Torpedoes**
This patent represents simplicity to the extreme. However, in doing so, we are back to rocket propulsion again. The inventor would gain simplicity by removing "…all the complicated mechanism heretofore employed in the propulsion of … self-propelling submarine torpedoes" and replace this material with a rocket motor for propulsion. But, unfortunately he gets the physics a little wrong with the statement: "… it will be evident that when the fuse with which the rocket is provided is lighted … the resistance of the water will cause its propulsion." For armament the torpedo would use "a spear-head having two or more sharpened blades" make this vehicle an early form of a kinetic kill weapon. As an option the inventor offers a more conventional explosive charge using the spear-head impact to initiate the percussion fuze.		
Advantages: This design does offer the advantage of being able to cut through any anti-torpedo netting surrounding the target vessel.		
Disadvantage: It's not clear how the spear-head "will, on striking the hull of such vessel, embed itself therein and insure its destruction."		

Patent # Inventor	Date Granted	Title
222,718 J.H. McLean	Dec. 16, 1879	**Improvement In Marine Torpedoes**

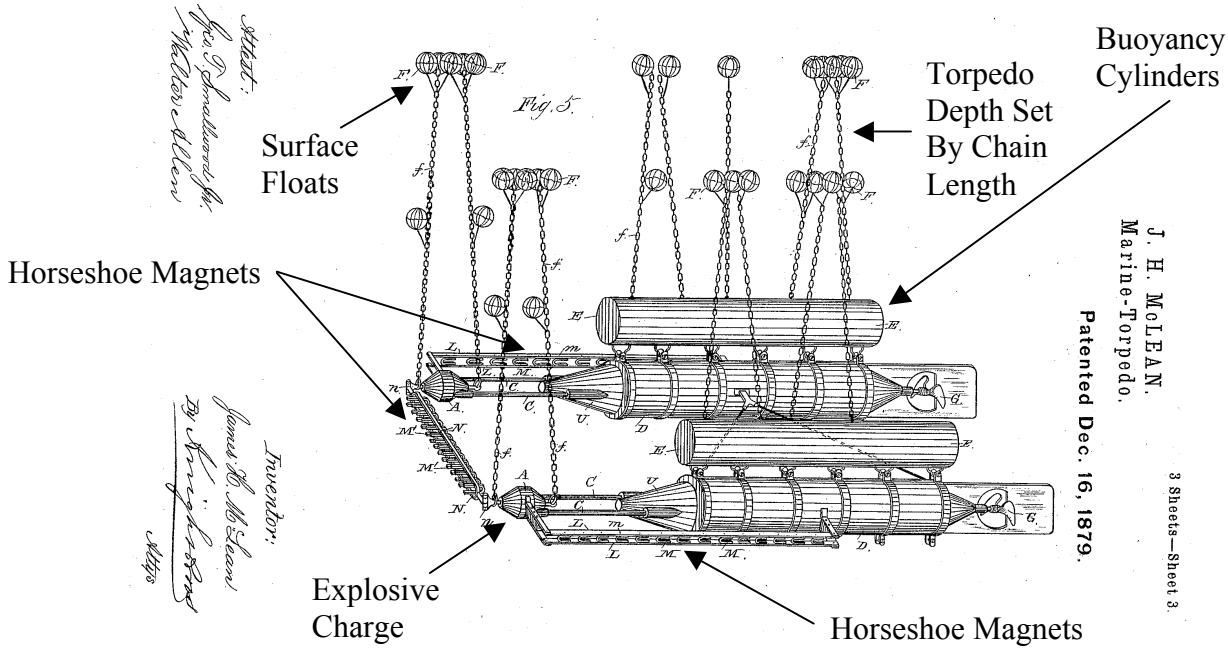

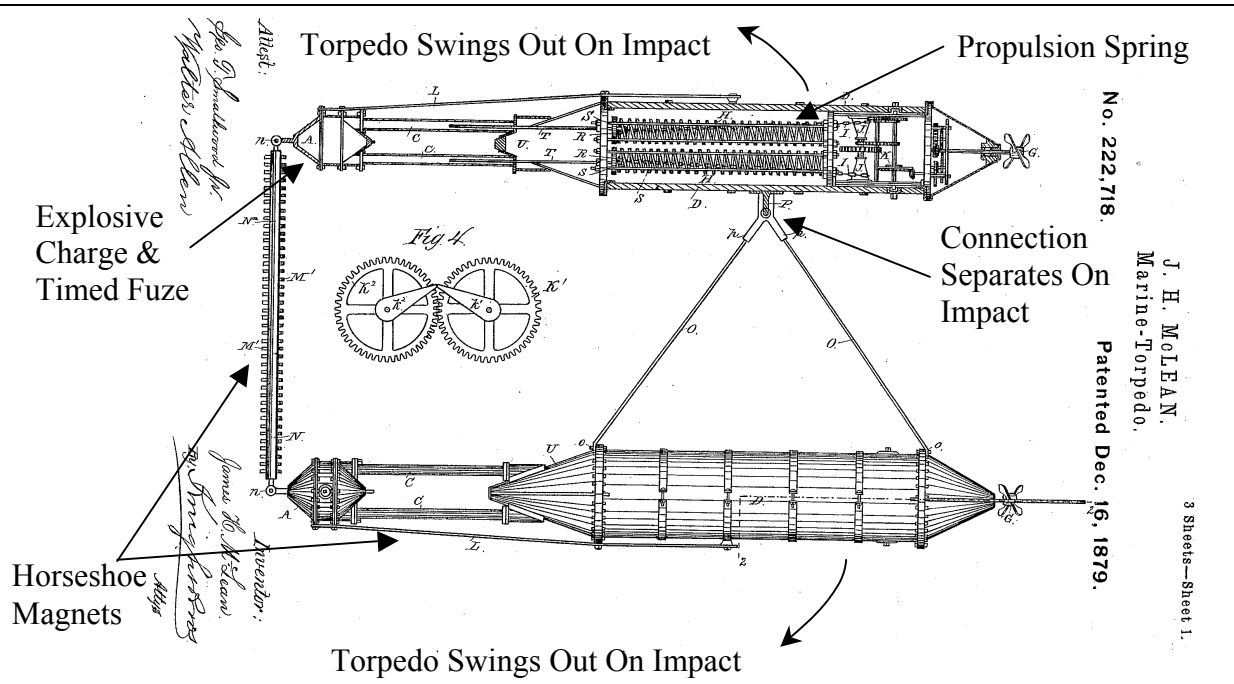

222,718 J.H. McLean	Dec. 16, 1879	**Improvement In Marine Torpedoes**

This is surely one of the most bazaar contraptions found among the patents looked at during the research for this project. It is a device consisting of a pair of linked torpedoes suspended by chains from a group of floats, in order to approach the target ship from "any desired depth of immersion."

The first novel feature is the propulsion system. As stated in the patent these self-propelled craft use an "…automatic propelling apparatus…" consisting of two springs in each vehicle that are wound tight and drive the propellers through a set of gears.

The design calls for this weapon "to attach itself to any vessel which it may be made to approach, and will remain attached … until it explodes… ." Attachment is accomplished "…with a system of magnets… ." These would be horseshoe magnets, the only kind readily available in the 19th Century. One row of magnets along the front of the bar joining the two underwater torpedoes and one row on each side of the combined pair.

Upon impact the front row of magnets is to stick to the iron hull of the target vessel and then by magnetic attraction, between the hull and remaining horseshoe magnets along the sides of the craft, the pair split apart and each rotates toward the hull. In this manner all three rows of magnets keep the two torpedoes attached to the iron hull of the target. If the propulsion springs have not been completely unwound the remaining propulsive force would just push the two devices against each other (or, more likely, push each other away from the hull).

The detonation of the two explosive charges is controlled by two time-delayed fuzes. The time delay suggested by the inventor is about half an hour (calculated to be some time after the springs have unwound and the propellers have stopped). Unless they go off at precisely the same time, the shock wave from one explosion will likely blow the other explosive charge package away from the hull.

So how is this supposed to work if anti-torpedo netting protects the target ship? In this case the floats are to snag on the netting and the pair of torpedoes are to then swing up against the hull. Who volunteers to go measure the depth of the netting and its distance from the hull so the float chains on the torpedoes can be properly adjusted?

Advantages: Since no remote control to any extent is suggested in this patent, that seems to satisfy the objective of cheapness. There is only the statement that the pair of torpedoes is to be "…carefully guided in the right direction."

Disadvantage: The pair must transit to the target very slowly or the drag on the floats and chain will force the device to approach the surface. This drag force, in any case, will severely limit the speed and range obtainable from a tension spring energy source.

The inventor states, too optimistically, that the floats "…will not be liable to attract attention floating in the water…"

And the inventor wildly overestimates the range of the magnetic attraction force.

Clearly this is a case of "What was this guy thinking?"

Patent # Inventor	Date Granted	Title
223,855 W.H. Mallory	Jan. 27, 1880	**Torpedo-Boat**

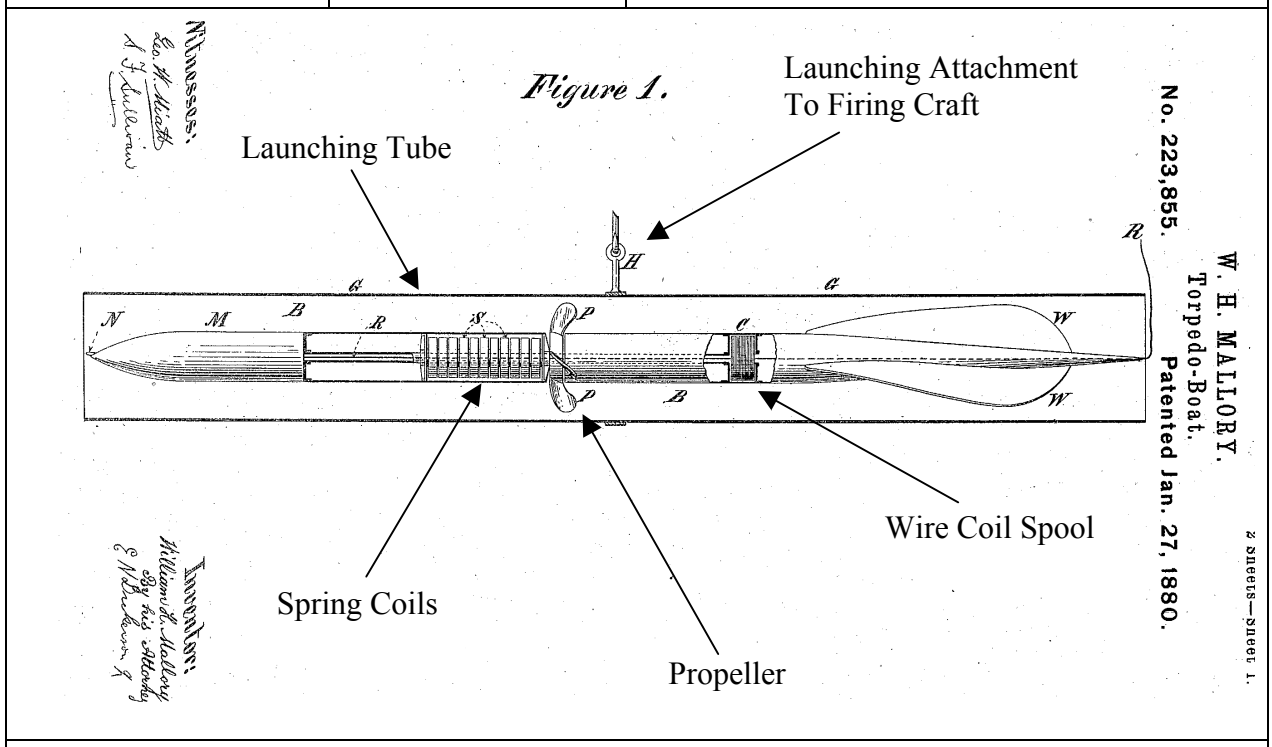

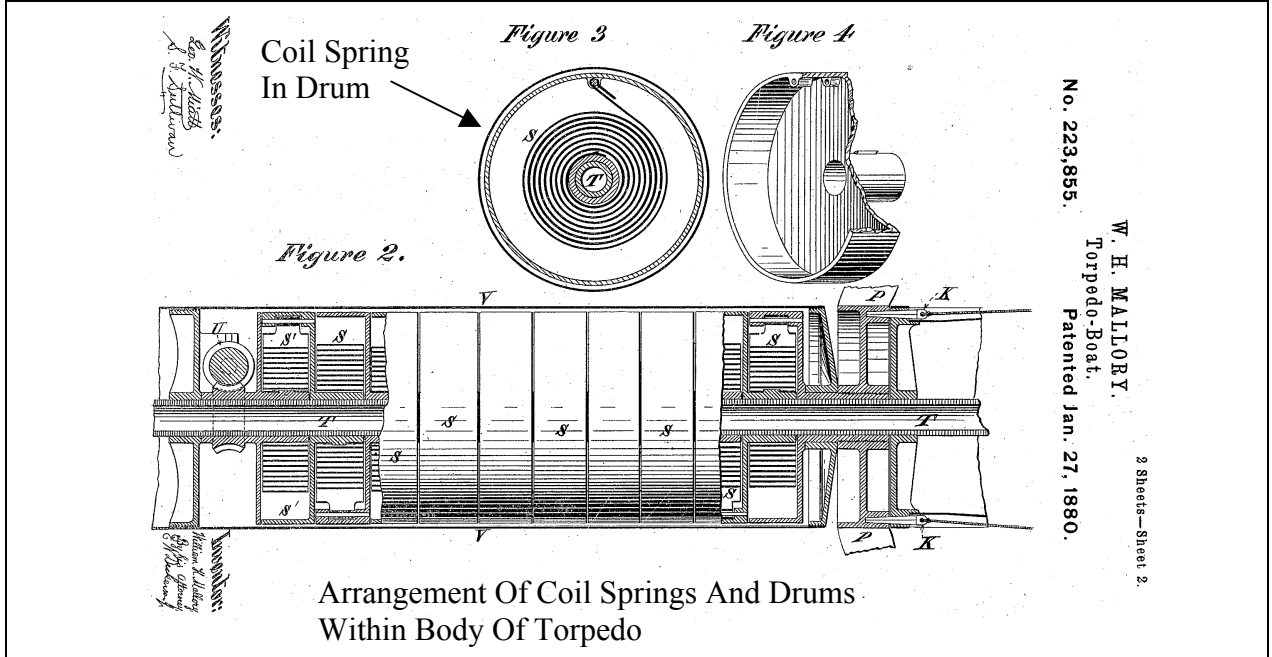

Arrangement Of Coil Springs And Drums
Within Body Of Torpedo

223,855 W.H. Mallory	Jan. 27, 1880	**Torpedo-Boat**

The inventor of this short-range, "free-going" torpedo states that it should be a replacement for the Civil War-era spar torpedo on torpedo launches.

The energy source again comes from springs, this time from "…a series of coiled springs…" that drive a screw propeller located in the middle of the torpedo. The spring coils are connected so the inner end of one spring is connected to the outer end of the next spring in the series. The springs are installed in drums to properly transmit the torque between the springs and the propeller.

The action of the springs in unwinding drives the propeller in one direction, and the reaction of the springs upon the torpedo rotates the body of the torpedo in the other direction (thus increasing stability). This body rotation is controlled by the large fins at the stern of the torpedo.

Fueling of this torpedo consists of winding up the propeller. The inventor estimates a range of no more than 200 yards, which may be acceptable for this uncontrolled device. During launch it is only aimed at the target, and during the run out to the target it is unguided.

The design calls for a coil of wire amidships, which is payed out after launch and connects the torpedo with an operator who can initiate the detonation of the explosive charge. An impact fuze is also provided.

Advantages:

This device would have a much greater range than the traditional spar torpedo, which it is to replace.

The inventor claims his idea would be cheaper and simpler than the, then new, Whitehead torpedo (but lacks the range).

Disadvantages:

No depth control is mentioned, nor does the inventor address it except with a statement about depressing the launching tube when firing the torpedo.

Patent # Inventor	Date Granted	Title
225,465 M. Coloney	Mar. 16, 1880	**Marine Torpedo**

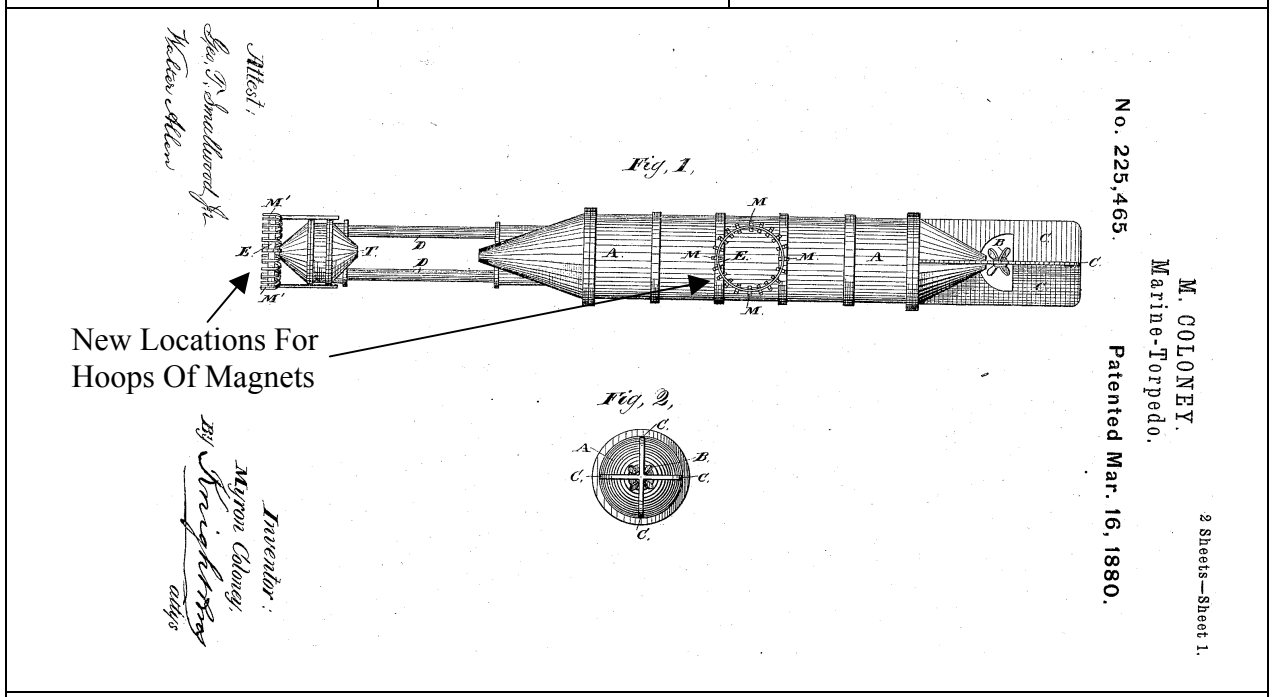

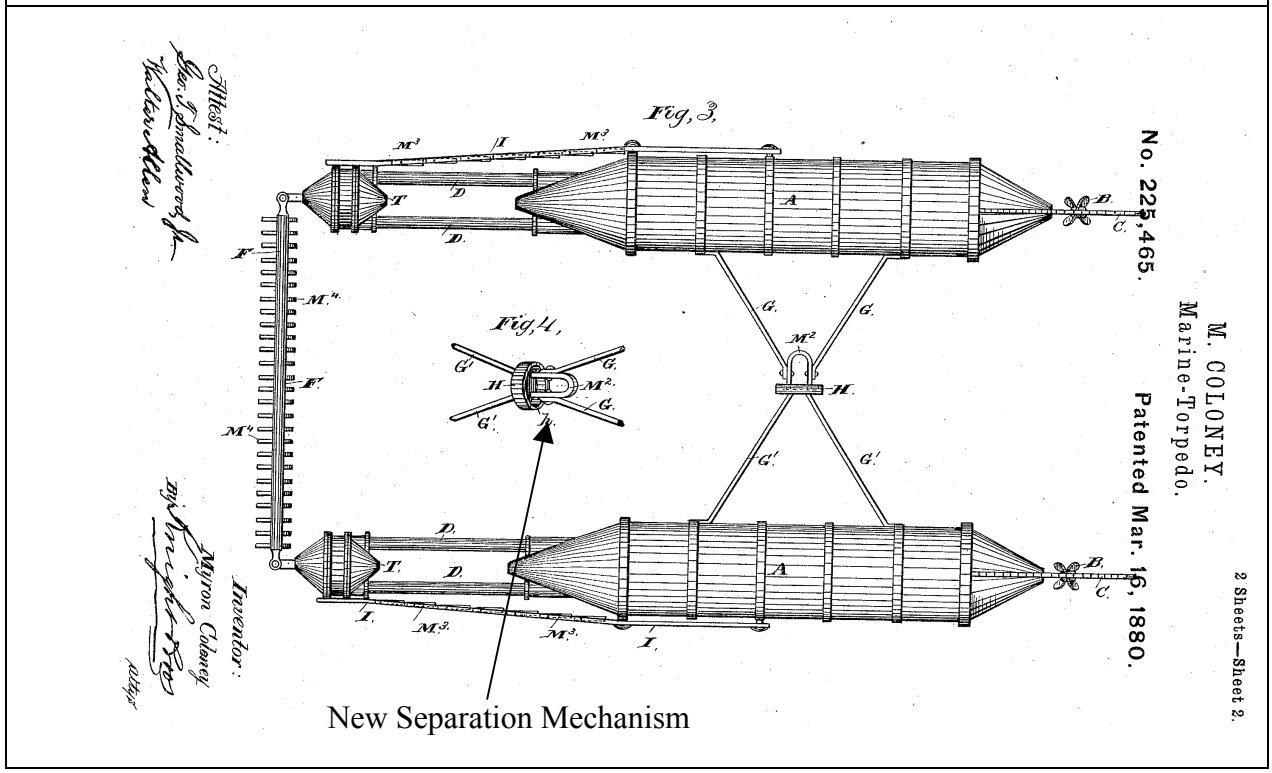

225,465 M. Coloney	Mar. 16, 1880	**Marine Torpedo**
This small invention builds upon the concept patented by J.H. McLean on Dec. 16, 1879 (Patent No. 222,718). The first small addition concerns new ways to mount more magnets. There are hoops of magnets on the top and/or sides of the vehicle and when used singly a hoop of magnets can be mounted to the bow of a torpedo. The only other difference is in the way the two torpedoes are joined together, using more magnets, of course. Separation of the pair occurs "when the superior attraction of the magnets will cause the two boats to be drawn into line and along the side or bottom of the vessel." This inventor also has a deluded impression as to the actual useful range of any magnetic attractive forces involved in this scheme.		

Patent # Inventor	Date Granted	Title
227,637 G.W. McMullen	May 18, 1880	**Torpedo-Boat**

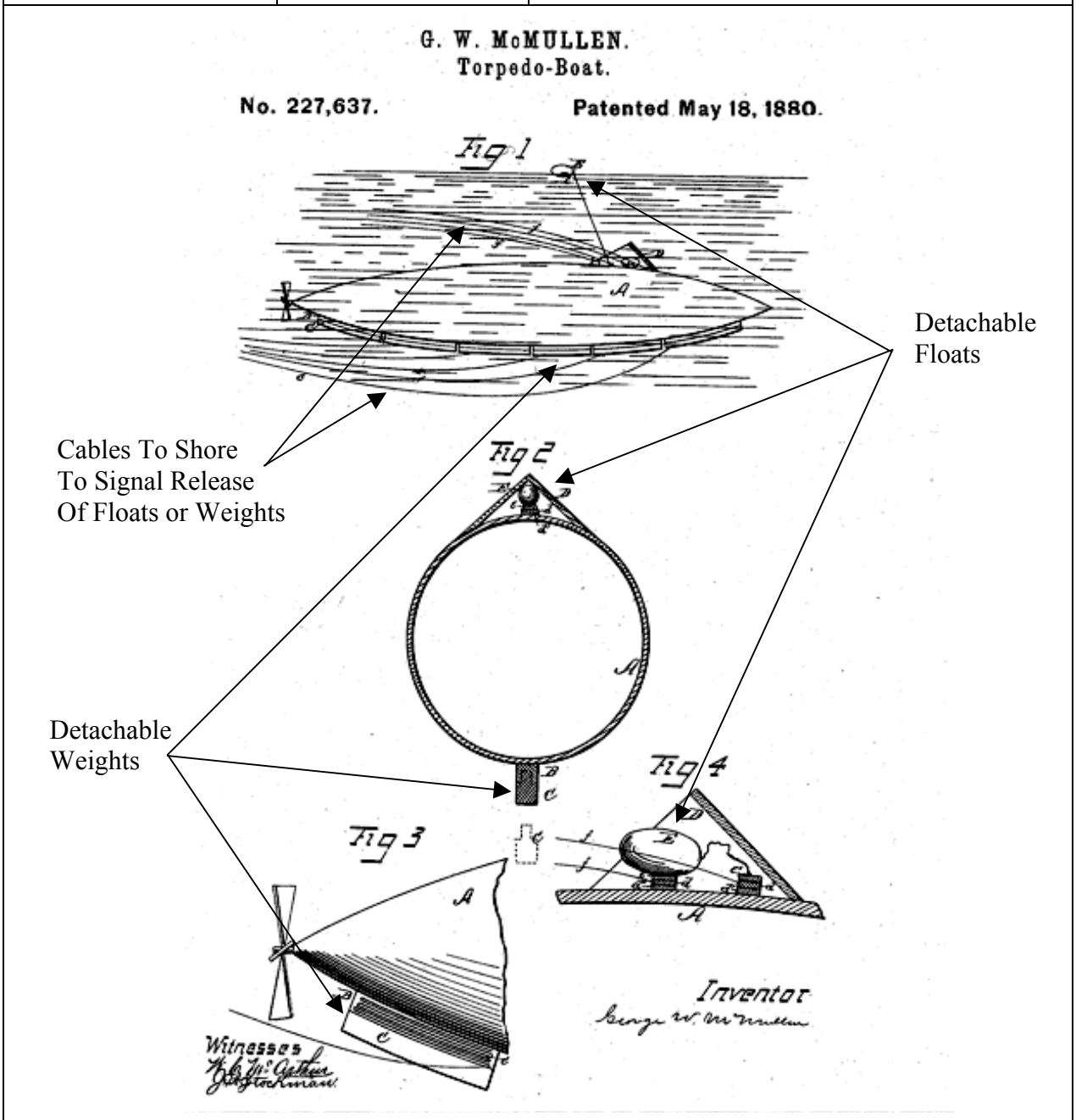

227,637 G.W. McMullen	May 18, 1880	**Torpedo-Boat**
This inventor provides a novel depth control approach involving several detachable weights along the keel and several detachable floats along the top. Each of them held to the torpedo hull by electro-magnets and each of them have a cable running all the way back to the launching point. The floats and weights are released by signals coming down the cable from the operator on shore. Floats would be released when it is desired to both submerge the vehicle and determine its position. Weights would be released when it is desired to bring the craft up under the target and explode the charge. Since there is no mention of a cable reel inside the torpedo, the vehicle must drag around these multiple cables as it maneuvers toward the target. The floats, when released, are also used by the operator at the launching point to guide the device to the target.		
Disadvantages: There are too many cables in the water, which would exert a very high drag load on the torpedo, drastically limiting its speed and range.		

Patent # Inventor	Date Granted	Title
245,864 G.H. Reynolds	Aug. 16, 1881	Submarine Torpedo-Boat

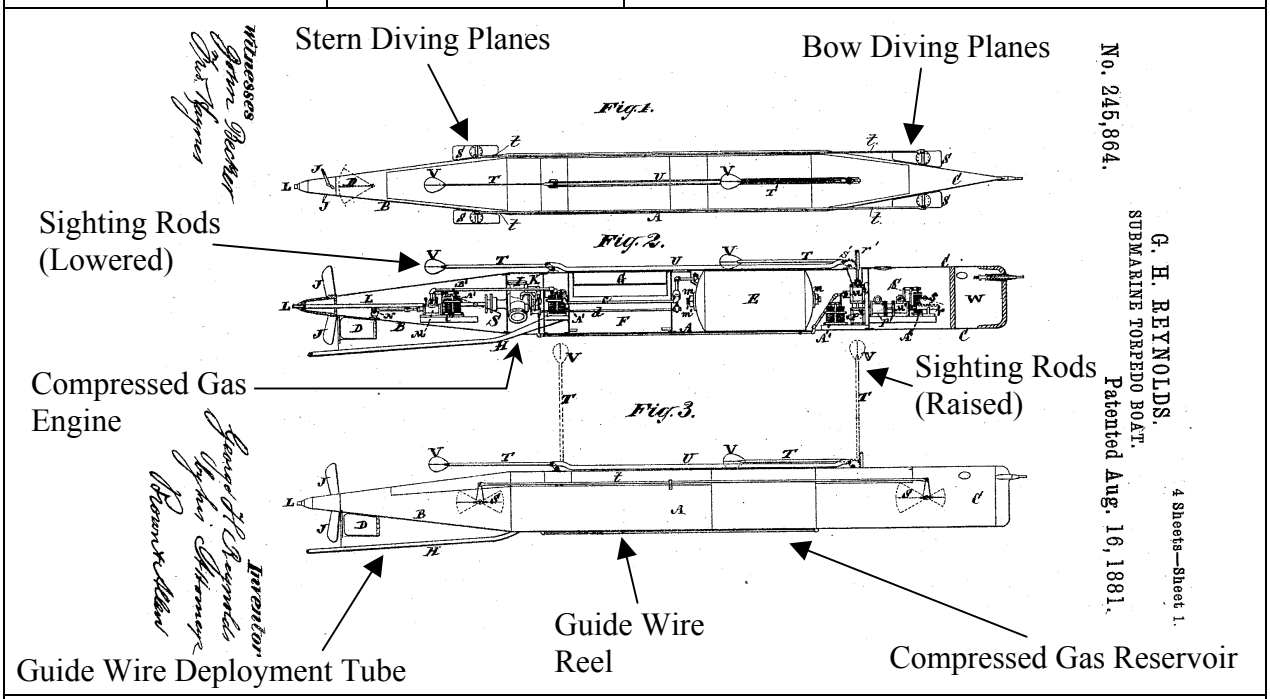

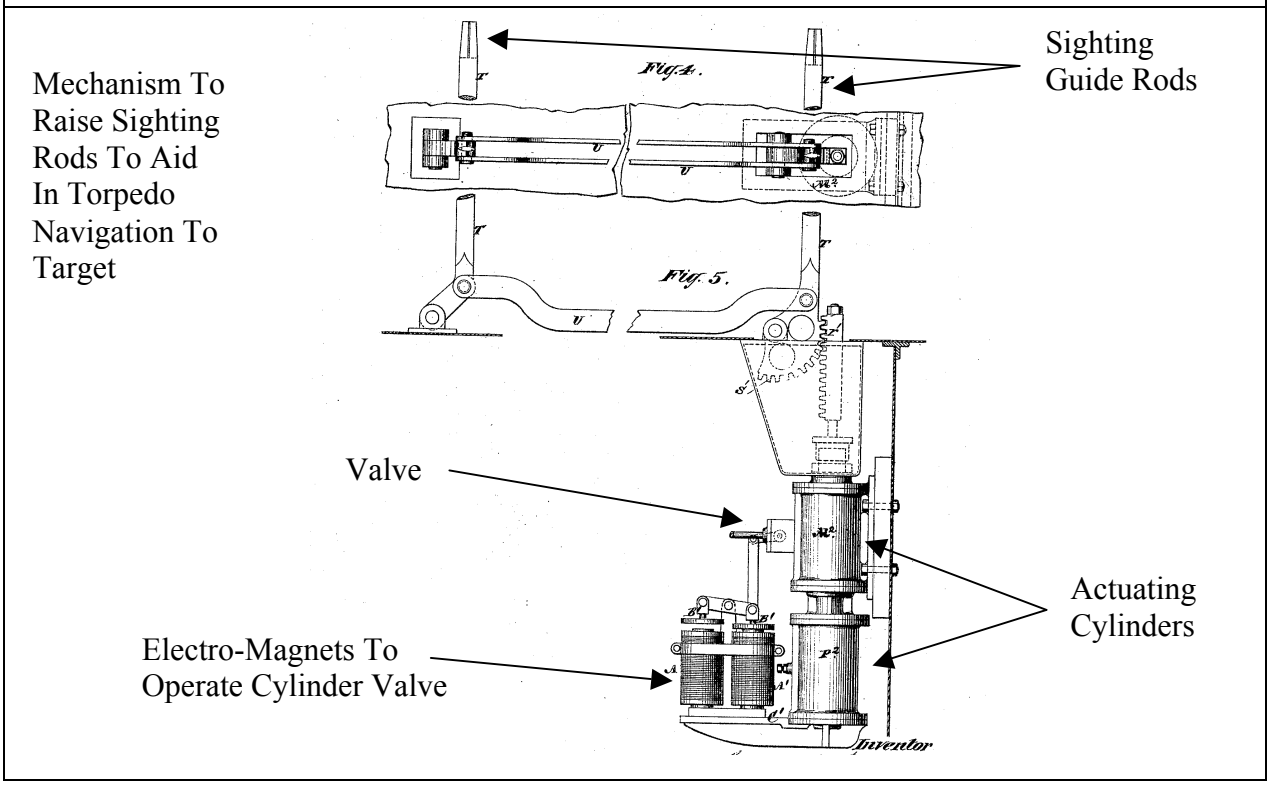

245,864 G.H. Reynolds	Aug. 16, 1881	Submarine Torpedo-Boat
In this patent the inventor makes improvements to a shallow-depth (near surface running) torpedo that, apart from its small size, looks somewhat like CSS HUNLEY since the bow is "wedge or ax shape" with "its converging sides vertical." The torpedo is powered by a compressed air/gas engine, in direct contact with seawater to retard the "refrigeration" effect (the freezing of components in contact with the expanding gas coming out of the storage reservoir). This is a technique that uses seawater as a source of heat to warm the expanding gas before it freezes everything in its way. The exhaust gases out of the engine are vented overboard through the hollow propeller shaft. The main feature described in this patent is the deployment of two hinged sights or target rods, topped with highly visible vanes. Each rod rotates 90° in response to the motion of a piston in a cylinder. Before rotation the vanes are stored flat against the upper surface of the torpedo. When rotated 90° the rods are in a vertical orientation and the vanes can be easily seen by the operator behind the vehicle (and allow the target an opportunity to be alerted to the incoming threat!). The design includes bow-mounted canards and stern-mounted elevators, these diving planes are called "side rudders" and are used to control the vessel's depth. Also, the design shows a cable reel and tube to direct the guide wire under the rudder and screws. The wire provides electrical communications with the control station to activate (raise or lower) the sight rods, provide steering control, and the detonation of the explosive charge. Above the guide wire reel is a buoyancy tank.		

Patent # Inventor	Date Granted	Title
249,192 W.H. Mallory	Nov. 8, 1881	**Rocket-Torpedo**
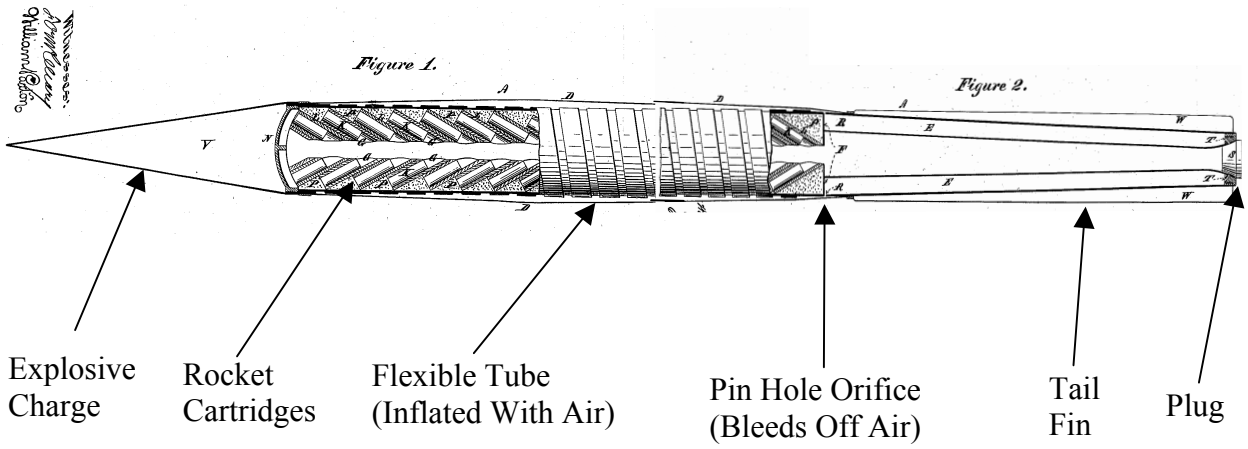		

249,192 W.H. Mallory	Nov. 8, 1881	**Rocket-Torpedo**

Here is another rocket-propelled torpedo; this time the thrust is obtained by using a cluster of small rocket cartridges, all burning simultaneously. This uniform burning of the fuel, from all the cartridges at once, is to minimize any shifting of the center of gravity, thus, increasing flight stability.

All of the individual small rockets are inserted into thick-walled hollow cones (made out of paper-maché) and surrounded by fire-clay to provide the necessary insulation around the cones.

The type of fuel is not specified only that it is "some gas producing substance" or other "slow-burning gas producing" fuel.

In addition to claiming a new (and "peculiar") construction for the rocket, the inventor also describes a unique method to compensate for the loss of weight due to the consumption of the rocket fuel.

On this point the inventor gets overly concerned with maintaining neutral buoyancy (and expends considerable ink in its explanation). He has devised a flexible tube to surround the mid-section of the torpedo, which he fills with air just before launch. Then while the torpedo is underway, consuming the rocket powder fuel, it is also slowly venting air out of the flexible tube. And if timed appropriately, the result should be neutral buoyancy. Left unsaid is the need to trim the vehicle (with air in the tube and cartridges installed) to be neutrally buoyant at its operating depth and at the deployment site – which might be a bit tricky in the heat of battle. Careful trimming is necessary as there is no depth control mechanism on this rotating body.

The rocket body is supposed to rotate on its axis due to the shape of the tail fins to obtain stability during flight through the water. Since there are no control surfaces the inventor relies upon spin to obtain a straight run. With no depth control diving planes or rudder to steer by, one just aims the rocket and lights the fuze.

Advantages:

Even with its high-speed potential and design simplicity, this scheme does seem somewhat hazardous.

Disadvantages:

Ensuring all the rocket cartridges light off at the same time is sure to be tricky.

Trimming, as already mentioned, and depth control during flight will be problems. This is an example of unstable equilibrium, since the torpedo may be stable at its trimmed depth, but it will be unstable at any other depth. Especially if it tends to dive a little too deep and the flexible tube will compresses a little, reducing the buoyancy, and sending the torpedo even deeper.

How many hours of testing will be needed to ensure the diameter of the air-venting orifice is of the correct size?

Patent # Inventor	Date Granted	Title
274,067 A. Weeks	Mar. 13, 1883	**Rocket-Torpedo**

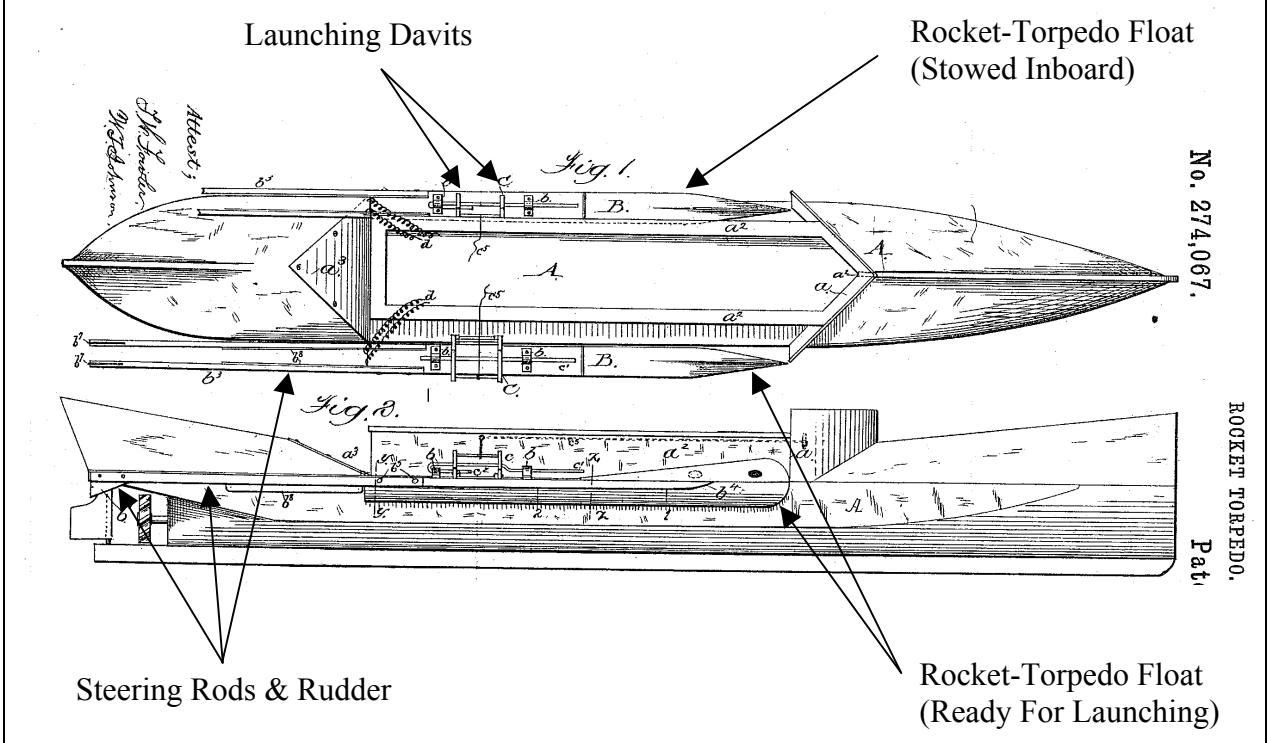

274,067 A. Weeks	Mar. 13, 1883	**Rocket-Torpedo**

This invention includes the boat that launches the torpedoes. And there are two torpedoes, which the inventor calls "floats," as they are surface runners and do not dive to make an attack. The discussion about the launching boat centers on the davits used to deploy the floats. The davits can move the torpedoes inboard for protection or outboard for launch.

These are "rocket-torpedo floats" with no control over steering, except by aiming the launching boat. The inventor does describe some "steering rods" with rudders to help maintain stability during the run as the rocket fuel is consumed.

The propelling rocket is in two stages, which do not separate during "flight." There is a small, partially blocked, passage between the two for the exhaust gasses to pass, and there is no mention of ways to ease the flow of the gasses out of the floats. A speed of about 51 miles/hour is claimed.

The rocket is detonated upon impact by the usual percussion-fuze igniting fulminate, which sets off the dynamite in the float's bow.

The floats end their run with a bang, one way or the other. If they miss their target they detonate at end-of-run when the last bit of burning rocket power torches off a secondary charge.

See Patent No. 274,068 for more on the launching boat for these torpedoes.

Advantages:

They can be used in pairs to attack a target protected by anti-torpedo netting, one becomes a net cutter and the other moves in to attack the target vessel.

Disadvantages:

No rocket nozzles are mentioned in the patent and the cumbersome route the exhaust gases must take to clear the rocket motor would make this a most inefficient propulsion source.

The attack approach to the target vessel is at its usually protected waterline, as these floats operate on the surface, which is not an optimum location to hit the target.

The only fatality this rocket ever caused was to someone standing too near when it exploded prematurely during testing, as reported in the New York Times of July 24, 1893.

Patent # Inventor	Date Granted	Title
312,579 T. Nordenfelt	Feb. 17, 1885	**Torpedo**

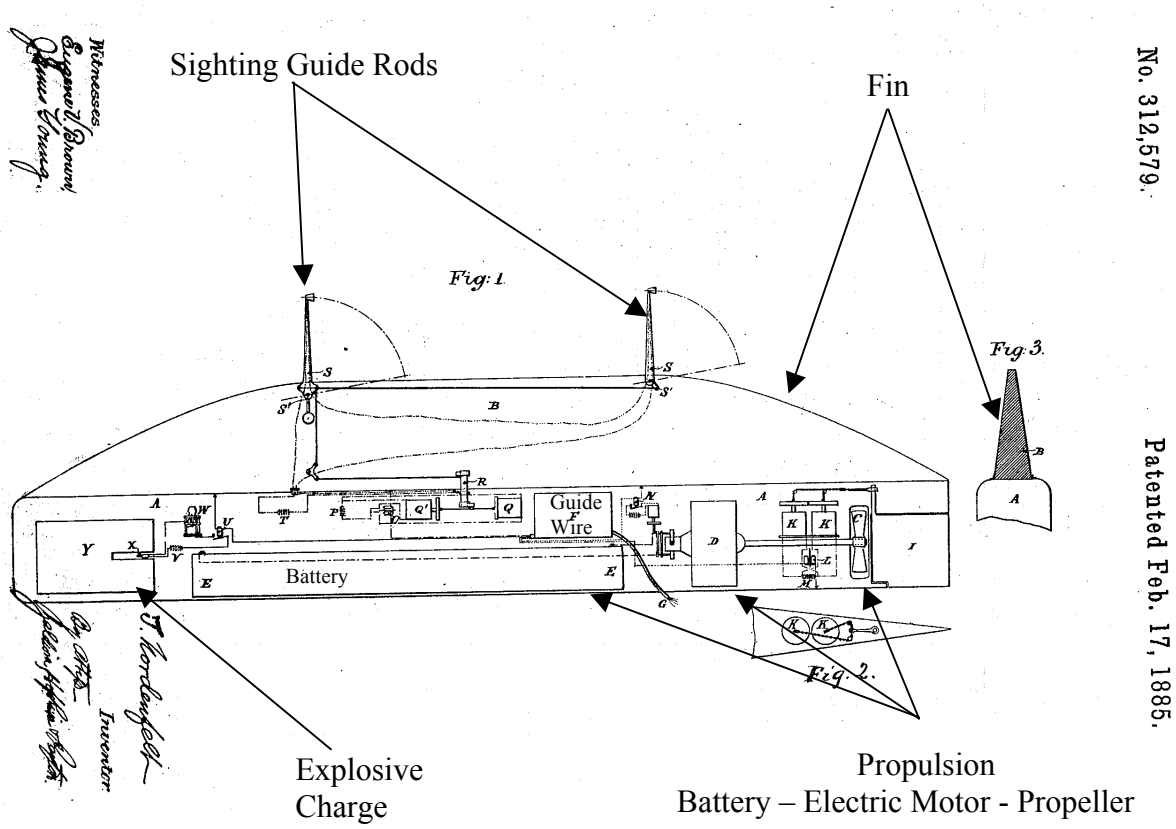

312,579 T. Nordenfelt	Feb. 17, 1885	**Torpedo**

When not designing multi-barreled machine guns or steam-powered submarines, the Swedish inventor Torsten Nordenfelt turns his attention to torpedoes. It may be of interest to note that of the four submarines he built, the second one, built for the Turkish Navy in 1886, was the first submarine to fire a mobile torpedo while submerged. This was a Whitehead torpedo and it was launched from an external torpedo tube.

However, in this patent the inventor offers the design of a "locomotive torpedo," which is "practically indestructible by artillery" and provides for warhead detonation at some distance below the waterline. To position the torpedo at the proper depth, a large buoyant fin protrudes from the top of the hull up to the surface. The fin provides the added benefit of acting as a roll control device. The inventor assumes that with the warhead so far underwater it is "indestructible by artillery."

The design makes use of sight or guide rods, which can be elevated briefly to reveal the location and course of the torpedo to its operator.

An on board storage battery provides the energy for propulsion, steering, operating the guide rods and their lanterns, and activation of the explosive charge fuze. All of the functions are controlled from a remote site (another ship, or shore site) using the multi-conductor guide wire.

Patent # Inventor	Date Granted	Title
319,633 W.S. Sims	June 9, 1885	**Torpedo-Boat Propelled and Steered By Electricity**

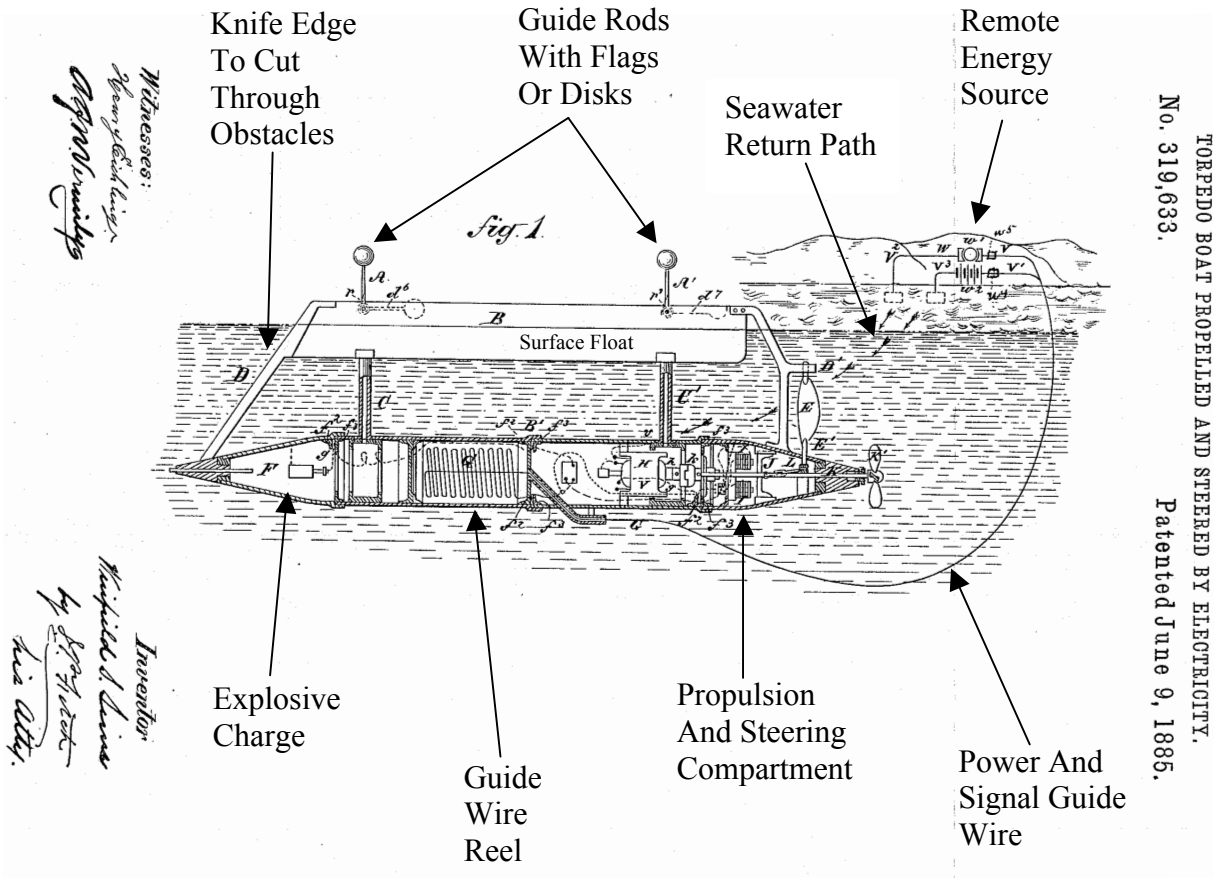

The Classic Pre-Torpedo

319,633 W.S. Sims	June 9, 1885	**Torpedo-Boat Propelled and Steered By Electricity**
This classic pre-torpedo is rigidly suspended from a float, in an effort to position the explosive charge deeper in the water (preferably below the target's waterline armor belt). Note: the forward float support is sharpened like a knife blade so it can cut through obstacles. This torpedo design makes use of electrical power for propulsion, steering, and for firing the "charge-exploder," all controlled from shore via a guide wire cable payed out from a reel in the craft (the conductive path uses a seawater return for both motive power and signal transmission). The patent describes how relays are used to control the electrical signals to several electro-magnets, which provide 3-position steering control (full port, full starboard, and amidships) plus fuze detonation. The hull is made using interchangeable sections (or modules) equipped with pass through conductors for the installation of electric wiring. The shore site incorporates both a "dynamo-machine driven by steam-power" to drive the main propulsion motor and a battery to run the torpedo's auxiliaries. The floats contain two hinged rods, carrying flags or disks, to provide visual guidance of the torpedo as it is directed toward the target. These swing down to avoid snagging on floating debris. Also see Patent 450,875 (with Thomas Edison).		

Patent # Inventor	Date Granted	Title
338,814 W.H. Wood	Mar. 30, 1886	**Vapor Engine**

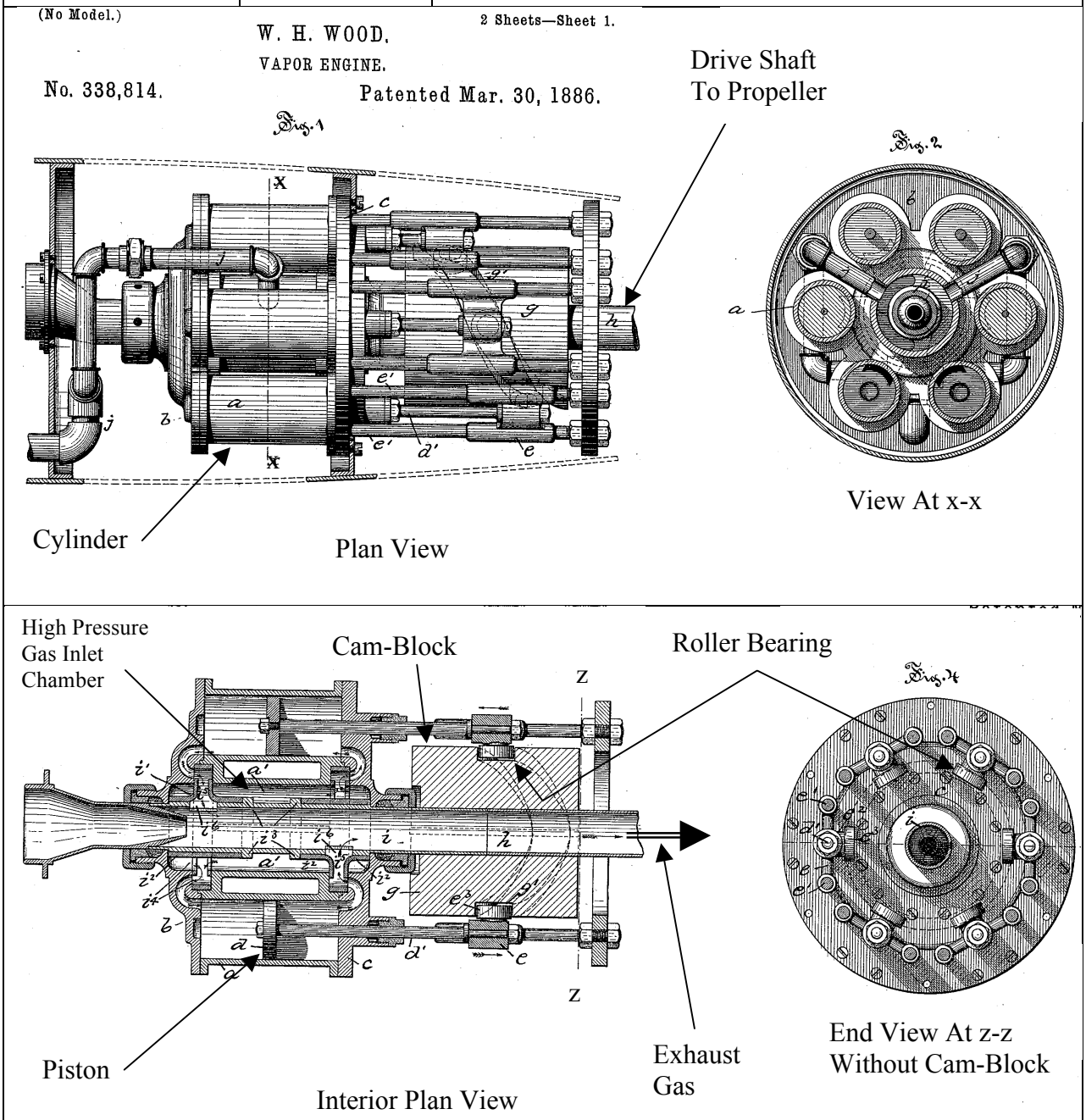

This engine has features in common with the current MK 46 Torpedo Otto Fuel Engine

338,814 W.H. Wood	Mar. 30, 1886	**Vapor Engine**
This patent presents a good description and drawing of the type of engine used to propel the torpedo-boats during this time period. The concept for an engine of this type outlived the pre-torpedo era and extends into the present day, considering its similarities to modern reciprocating engines used to drive today's torpedoes. An important feature of this type of engine is the method of translating the reciprocating motion of the pistons into rotary motion of the drive shaft. And the inventor specifically did not want to use a crank assembly (like a crank-shaft). Instead he uses a "cam-block" with a curved groove around it. Within this groove rides a roller bearing connected to each piston rod. This roller follows the piston rod in its one-dimension motion (just back and forth). But the roller also travels within this groove around the cam-block. The rotating cam-block is connected to the propeller's drive shaft. Even though the cam-block is not what is known as a "swashplate" today, it accomplishes the same thing. Useful work (the motion of the pistons) is generated by the expansion of the high-pressure gas within the cylinder. Upon expansion the gas is exhausted out through the center of the drive shaft (and out from the center of the propeller).		

Patent # Inventor	Date Granted	Title
339,096 G.E. Haight W.H. Wood	Mar. 30, 1886	**Submarine Torpedo-Boat**

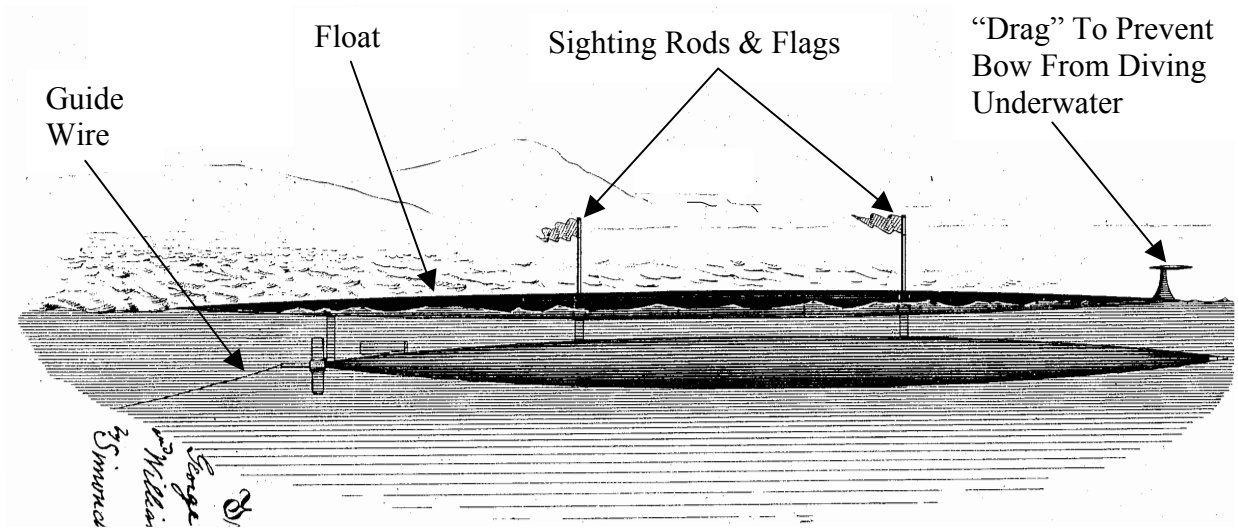

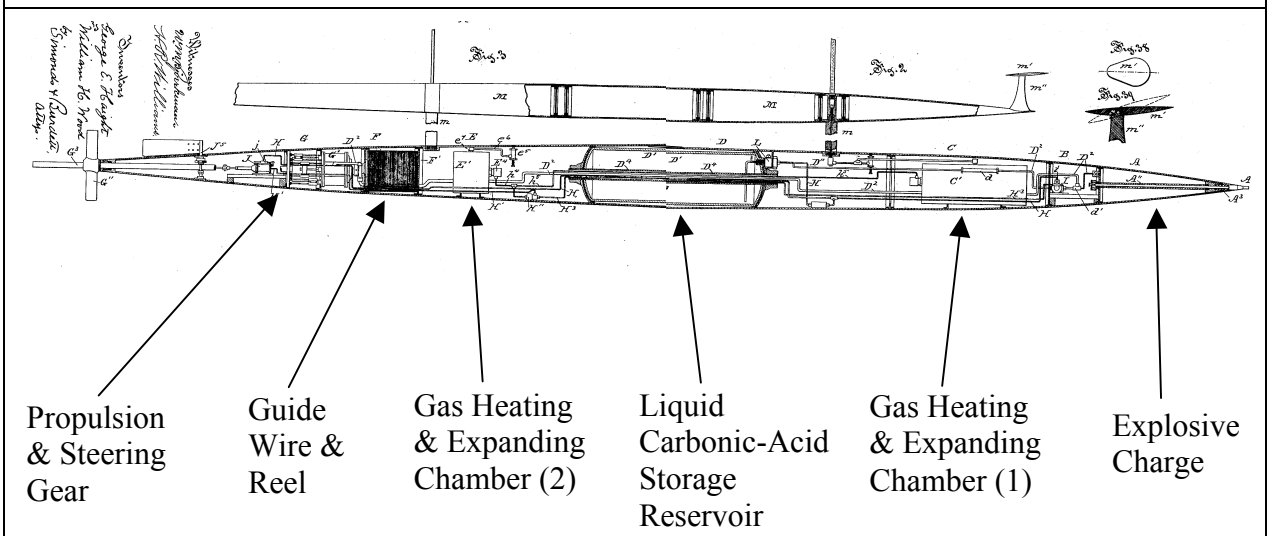

339,096 G.E. Haight W.H. Wood	Mar. 30, 1886	**Submarine Torpedo-Boat**

This patent contains some very good illustrations of the various components making up a torpedo of this era. And it completely describes how these components are interconnected and how the working fluid is used to accomplish torpedo functions.

This torpedo is held about 3 feet underwater by a long surface float to protect it from the type of counterfire rained down on CSS HUNLEY by Union troops during the Civil War. The surface float also stabilizes the craft and prevents the nose from pitching down. Mounted on top of the float are two sighting rods (with flags) to aid in guidance.

The motive power is from carbonic-acid gas (carbon dioxide, CO_2, and water) greatly compressed to a liquid form and made useful as a working fluid for the engines by flowing through several expanders and heaters. (Note: The engine used by this and several other patents bears a strong resemblance to the modern Torpedo MK 46, MK 48, and MK 54 Otto Fuel Engine.) The uses of this gas to control the steering and throttle valve mechanisms are the main points of this patent.

To begin the operation of this torpedo the main fuel flow valves must be hand cranked open during launching preparations (there being no seawater start switch).

Then there is the very odd way of starting off, by issuing a starboard rudder command that causes some lime to be dumped into heater tanks. These tanks contains sulphuric acid and water. When the lime hits this solution an exothermic reaction takes place producing heat to energize the gas and retard the tendency of the expanding gas to freeze everything on its way to the engine. After the engine starts, a cut-off valve is tripped to prevent any more control gas from going to the lime dumping mechanism.

There is a somewhat confusing treatment on how some of the vaporized gas at the top of the storage tank is funneled off to operate the steering gear, throttle valve, and to pull out a couple of pins that dump the lime into the fluid heater tank at engine start up.

Vehicle control is over a two-conductor wire with a seawater return; one conductor goes to the steering gear and the other goes to the throttle valve.

A strong spring returns the rudder amidships and different current polarities down the steering conductor wire move the rudder to either port or starboard.

The guide wire spool is laid out longitudinally and does not spin, but the cable pay-out scheme shows that the inventors don't quite have it figured out yet. They have the cable being payed out from the outer layers first, over the top of the end flange through a "flier" that spins around the flange to guide the cable as it peels off the outermost layer and over the spool-end flange.

The detonation of the explosive charge is on impact only, once the explosive charge electrical circuit has been armed. This is accomplished by completing an electric circuit as pressure in the gas line builds up following engine start up. The explosive charge is disarmed when the engine shuts down or when the working fluid gas is expended.

Patent # Inventor	Date Granted	Title
349,711 G.E. Haight W.H. Wood	Sep. 28, 1886	**Gas-Heating Chamber For Torpedo-Boats**

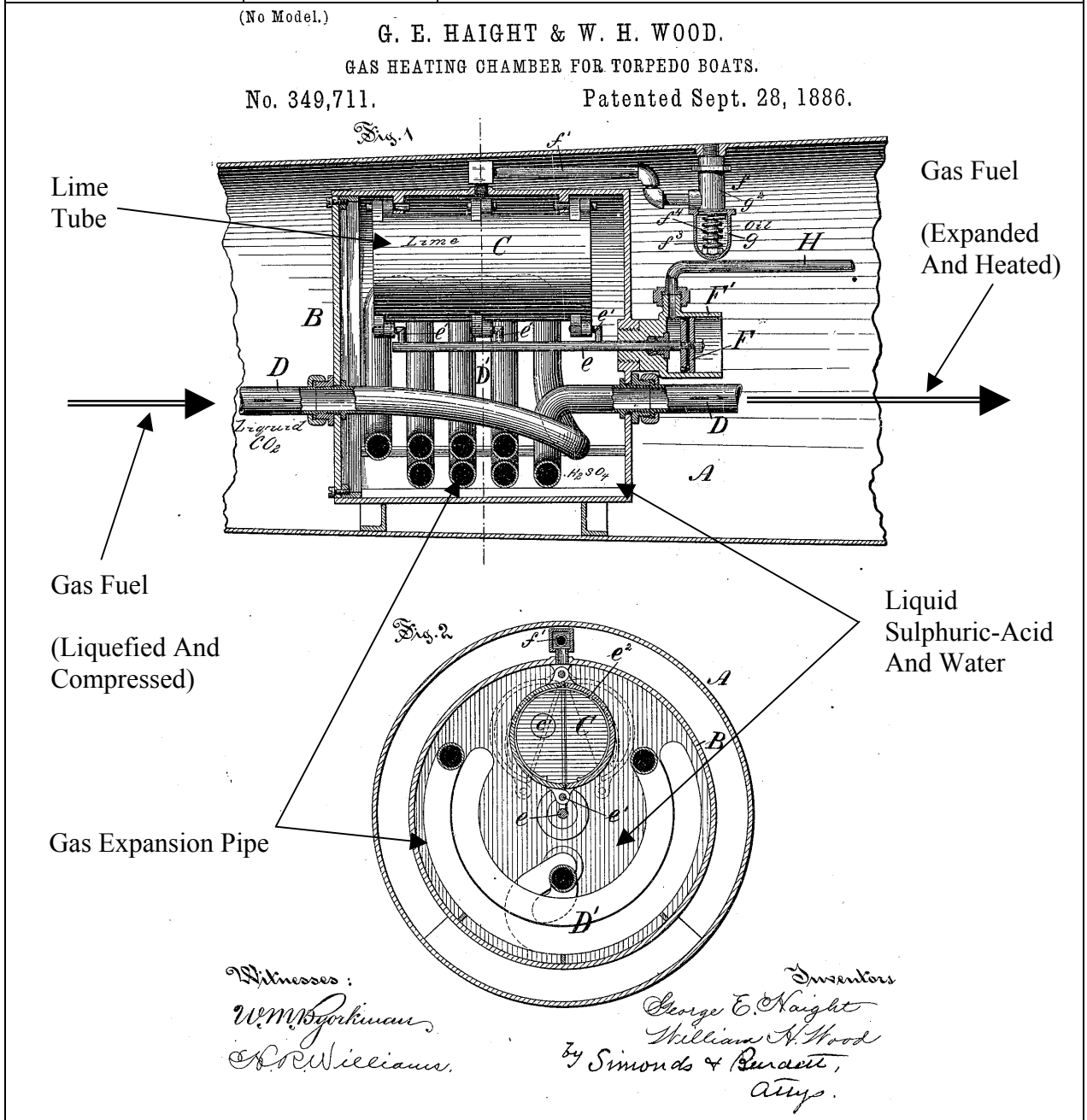

349,711 G.E. Haight W.H. Wood	Sep. 28, 1886	**Gas-Heating Chamber For Torpedo-Boats**

This is one in a series of patents that these inventors took out to cover their design for a "torpedo-boat." The overall design is presented in Patent No. 339,096. This patent more thoroughly discusses the gas heating and expanding component, previously described in their general torpedo design patent.

Heating of the expanding gas, to prevent the adverse "refrigeration" effect, was identified as being a limitation to the original Whitehead torpedo design, even though the early Whiteheads did not have a high pressure reservoir capable of producing the component freezing effect that would occur from a gas expanding out of a high pressure environment.

The device described in this patent accomplishes two things:

(1) Prevents the highly compressed liquid fuel from freezing valves and piping when released from its storage reservoir on its way to the engine.

(2) Raises the temperature of this gas considerably above what would be necessary to just prevent freezing to improve engine efficiency.

The hotter this chamber heats the gas the greater will be its pressure at the engine inlet (resulting in more useful work from the engine). The effect on torpedo performance is realized by higher speeds and/or longer ranges.

The heating is accomplished by the heat liberated in the chemical reaction between a solution of sulphuric-acid and water, and chunks of lime dropped into the solution at engine startup. Piping, carrying the expanding working fluid, twists and turns within the bath soaking up the heat from this reaction, then the hot gas enters the engine. The patent covers the mechanics of dumping the lime from its storage tube into the acid solution. A small portion of the expanded gas is funneled back to drive a piston that pulls out a pin, opening a spring-loaded door, and dumping out the lime into the bath. A safety valve prevents rupture of the chamber if the pressure from the chemical reaction gets too high.

Note: In this patent the volume of the working fluid is only increased by heating and not, as done years later, by the admission of another substance such as water to create steam.

Patent # Inventor	Date Granted	Title
358,471 S.H. Nealy	Mar. 1, 1887	**Marine Torpedo**

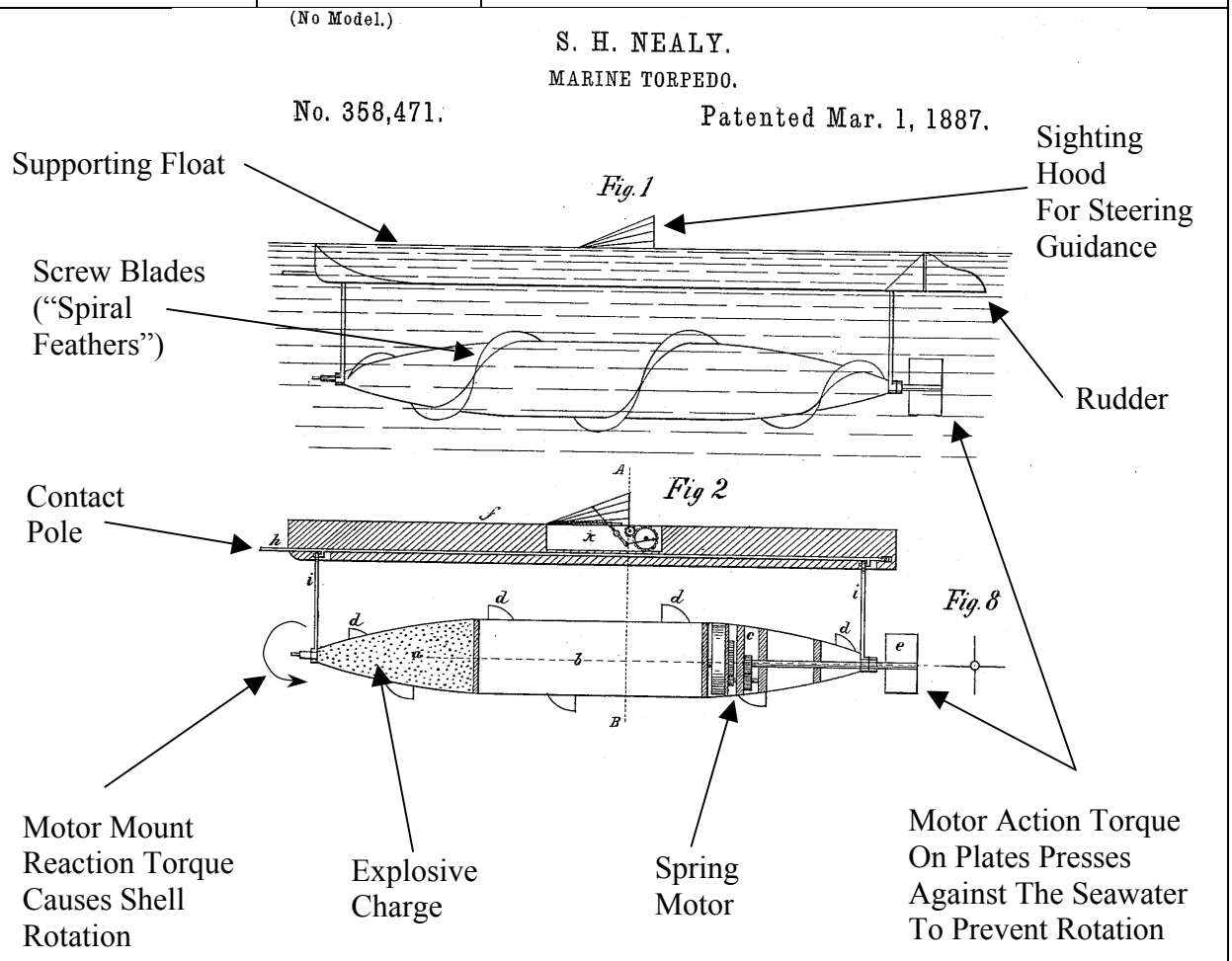

The Screw Driver

358,471 S.H. Nealy	Mar. 1, 1887	**Marine Torpedo**

Now for something that is done backwards. The reverse of what has been presented in many of the previous patents is behind the thinking here. In this patent it is the motor that operates in the opposite manner. The drive shaft is fixed, relative to the surrounding seawater and is not supposed to rotate. Rather it is the motor casing, motor mounting, and the whole body of the torpedo that is to rotate. Propulsion is obtained from the "screw-blades" or "spiral feathers" wound around the outside of the rotating hull. The motor action, transferred by way of the drive shaft, is reframed from rotation by the four flat plates pressing against the seawater. The motor reaction is transmitted to the hull through the motor mountings.

Another odd feature of this design is the concept to have the float separate from the torpedo body upon impact of the contract pole with the hull of the target vessel. Upon contact the torpedo continues to move forward and to move "downwardly" below the "ordinary guard-chains with which vessels of war are now provided."

And the third oddity is the energy storage or fuel supply. It is the tension in a wound spring that "fuels" this torpedo.

Steering is dismissed with the statement that it is "controlled from the point of launch in any well-known way." But the inventor does offer a method of visual guidance through a brightly colored hood that pops up and down, from the top of the float.

Clearly some creative thinking was done here.

Disadvantages:

If such a device were ever to be built the motor's drive shaft should be connected to the supporting float, if it is to be prevented from rotating. It is doubtful that using the plates as "a fulcrum, abutment, or purchase against the water" will prevent rotation of the drive shaft.

The horizontal distance from the end of the contact pole to the impact fuze in the nose of the torpedo is rather short, providing too little time for the torpedo to descend to any useful depth before impact.

To make the two vertical rods detachable and able to separate the two vehicles upon contact with the target, the inventor shows them very loosely connected to the float. This will cause the powered torpedo to under run the float and come up under it.

Patent # Inventor	Date Granted	Title
359,313 H.M. Bennett	Mar. 15, 1887	**Electric Torpedo Boat**

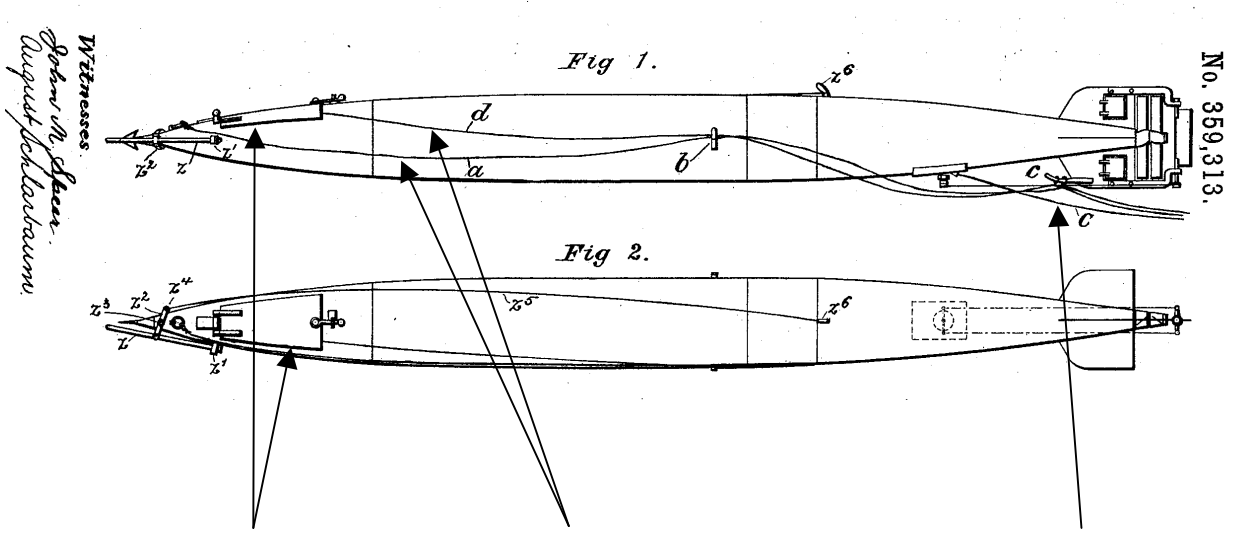

Life Saving Gear
Stowage Compartment

Communications
And Messenger Lines

Controlling
Guide Wire

Rescue Torpedo		

359,313 H.M. Bennett	Mar. 15, 1887	**Electric Torpedo Boat**
A torpedo-like device is described in this patent that is used for rescue at sea and saving lives on ships in distress. It is sent out on its mission of mercy to establish telephone communications, carry out a messenger life-line, and bring out to the stranded crew necessary provisions and extra life jackets. The messenger line and telephone cable are towed out by the torpedo. The design allows for the torpedo to be stopped and the cargo removed once it reaches the distressed ship. The patent describes an electric steering mechanism operated by using electro-magnets and controlled by signals coming down another cable towed by the torpedo device. This steering mechanism may be installed in existing torpedoes (like The Whitehead, which is not controllable) or, by using a separate pod, mounted to the stern (as applied to the Lay torpedo) to provide that torpedo with the ability to carry out a messenger line and telephone cable. Replacing the warhead with a storage compartment completes the modification of a military weapon into a life-saving vehicle.		
Disadvantages: The vehicle must tow out the various cables and lines from shore, which creates additional drag on the vehicle. Steering and stopping the craft by remote control once it arrives at the distressed ship will be very tricky, especially in a severe sea state (when ships usually become distressed).		

Patent # Inventor	Date Granted	Title
364,364 A.P.S. Miller	June 7, 1887	**Torpedo-Boat**

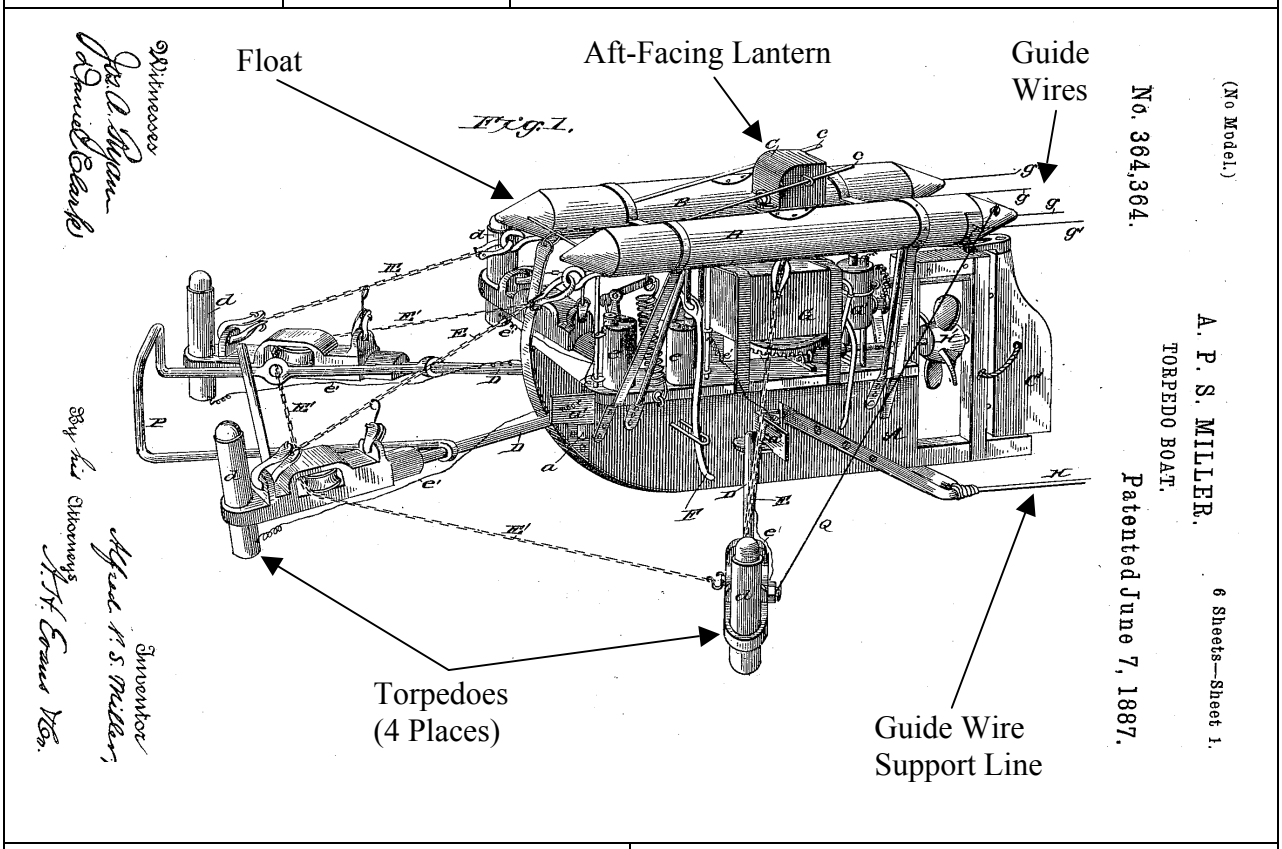

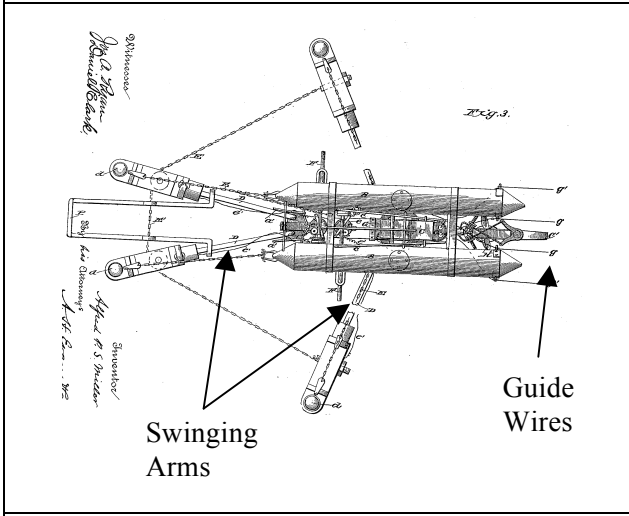

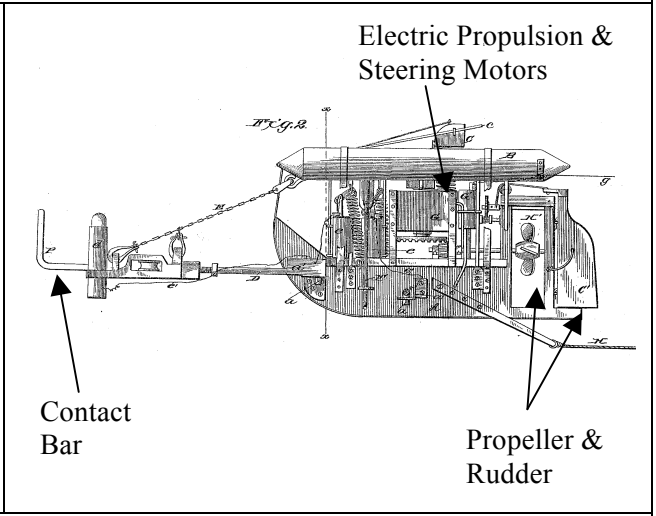

The Four-Headed Beast

364,364 A.P.S. Miller	June 7, 1887	**Torpedo-Boat**

This patent presents a torpedo-carrying contraption that carries at least four explosive charges. Apparently, the term "mine" had not yet come into common usage.

The configuration shown here has the device strapped to two buoyancy floats to ride just below the waterline with an aft facing lantern mounted between the two floats for guidance. This seems like a way to deliver 4 torpedoes (mines) to a site where they wait for a ship to make contact. When a ship strikes this device from straight ahead, the two outermost arms close around the lower part of the hull, and the operator explodes the four torpedoes. Or they can explode automatically as the arms close and make contact with the target's hull.

Electric steering and propulsion are controlled by four "proper metallic connections" held taut and separated from each other by buoys at regular intervals. These wires, and the series of buoys that are secured with a fifth wire, are payed out from five reels at the torpedo deployment station using a steam engine. During transit this "torpedo-carrier" must overcome the drag of the five cables with their series of buoys keeping the lines straight, even if the operating site "be miles distant."

Disadvantages:

There are too many lines in the water at once, some will surely foul. The drag of the wires and supporting buoys will increase with distance eventually slowing the vehicle to immobility.

With the guidance lantern being so low to the waterline, and designed to swing down with each passing wave, it is unlikely that vehicle control will still be possible at a site "miles distant" (with fouled lines).

Patent # Inventor	Date Granted	Title
387,353 M.E. Hall	Aug. 7, 1888	**Auto-Mobile Torpedo**

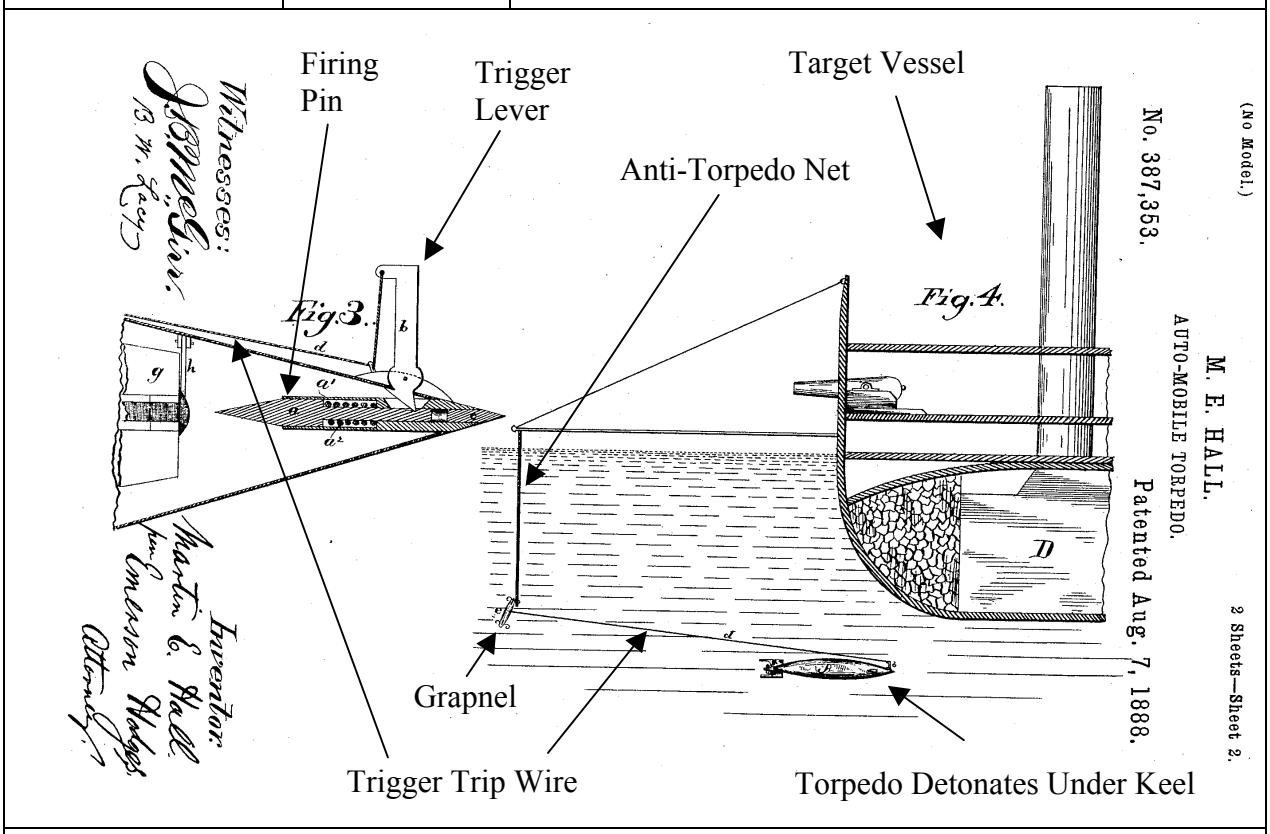

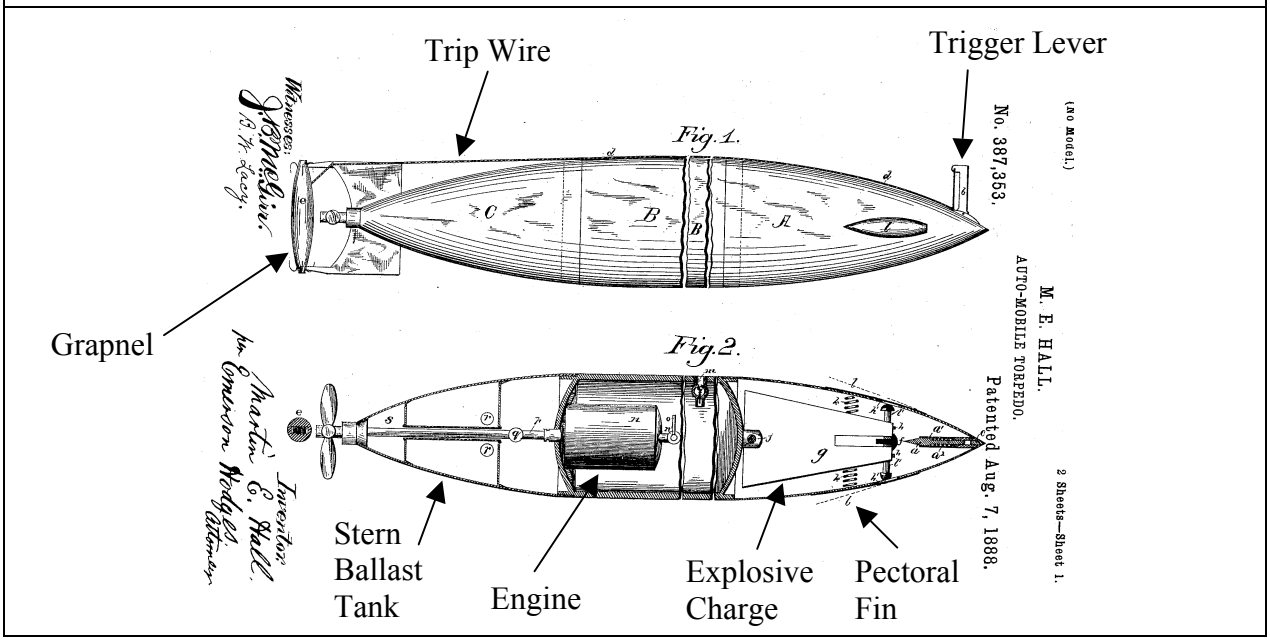

387,353 M.E. Hall	Aug. 7, 1888	**Auto-Mobile Torpedo**

Within this interesting looking patent lurk some very strange ideas. The problem the inventor addresses is sound enough, getting around the anti-torpedo netting guarding a surface target. And his method is rather novel, deploying a buoyant grapnel to hook onto the bottom of the net while the torpedo slides freely under it to explode under the target's keel. But there seem to be a lot of strange issues to deal with here.

Some of his strange thoughts about torpedo design are summarized below:

1. The firing pin trigger is outside the hull and exposed to the onrushing water flowing past to bow of the torpedo. This trigger is supposed to be actuated when the grapnel snags onto the bottom of the net. The problems with this approach include, (a) the pressure of the oncoming water would actuate (or rotate) the trigger when the torpedo is underway with a force on its frontal area that increases as the square of the torpedo's velocity, (b) any floating debris could knock it over and set off the explosive charge, (c) the length of the line to the grapnel needs to match both the net depth, and the separation between the net and ship (who is going to swim out there with a tape measure and take dimensions?), (d) due to drag forces the grapnel will probably stream directly astern of the torpedo at any modest speed making the depth estimate of the grapnel and the depth setting of torpedo very critical.
2. The issue of roll stability also inspired some odd thinking. The inventor allows the explosive charge to swing left or right within the torpedo shell as gravity pulls on it during periods of left or right rolling (due to a disturbance such as a wave passing by). The swinging motion of the charge pushes out a "pectoral fin" that is supposed to push back on the seawater and upright the torpedo back to level flight. But, it is not clear how any righting torque is applied without a diving plane or elevator control surface at an angle to the flow stream. Should such a roll scheme be incorporated the result would be a constant roll back and forth as the torpedo hunts for stability.
3. The firing pin would probably be off-center from the percussion cap during such a roll and not be able to set off the explosive charge if impact occurred during a roll.
4. Why is the engine located within the compressed gas storage reservoir? Plus overcoming the "refrigeration" effect, so worrisome to other inventors, is not discussed in this patent (unless the reservoir is at a modest pressure).
5. Depth control uses a ballast tank in the stern to raise and lower the back end (pitch down or pitch up the torpedo). Apparently, if the torpedo finds itself above the desired depth the lower pressure in the ballast tank will expand the air, increase buoyancy of the stern section, and cause the torpedo to pitch down. The propeller will now drive the torpedo down to a lower depth. Likewise, if the torpedo finds itself below the set depth, the increased pressure in the tank will compress the air and decrease the buoyancy at the stern, causing the torpedo to pitch up. The propeller will now drive the torpedo up to a shallower depth. However, if this scheme were to work at all, the air pressure in the ballast tank would need to be regulated to match the ambient seawater pressure at the running depth. The inventor seems to have left this out. Even if this were incorporated, the end result would be a torpedo doing a roller coaster maneuver up and down as it again hunts for stability. In the years to come, feedback control systems were invented that solved the stability problem.
6. Expecting the buoyant grapnel to trail substantially above the torpedo while underway at even a few knots is unrealistic. Most likely the tension in the taut line to the grapnel will either pitch up the torpedo (increasing the stability problem) or prematurely trip the trigger lever.

This device does have one saving grace. Its development would serve as a mechanism to keep funding flowing into a torpedo test range as the developers work through the many hydrodynamic issues involved in this scheme.

Patent # Inventor	Date Granted	Title
399,516 R.J. Gatling	Mar. 12, 1889	**Combined Torpedo And Gun Boat**

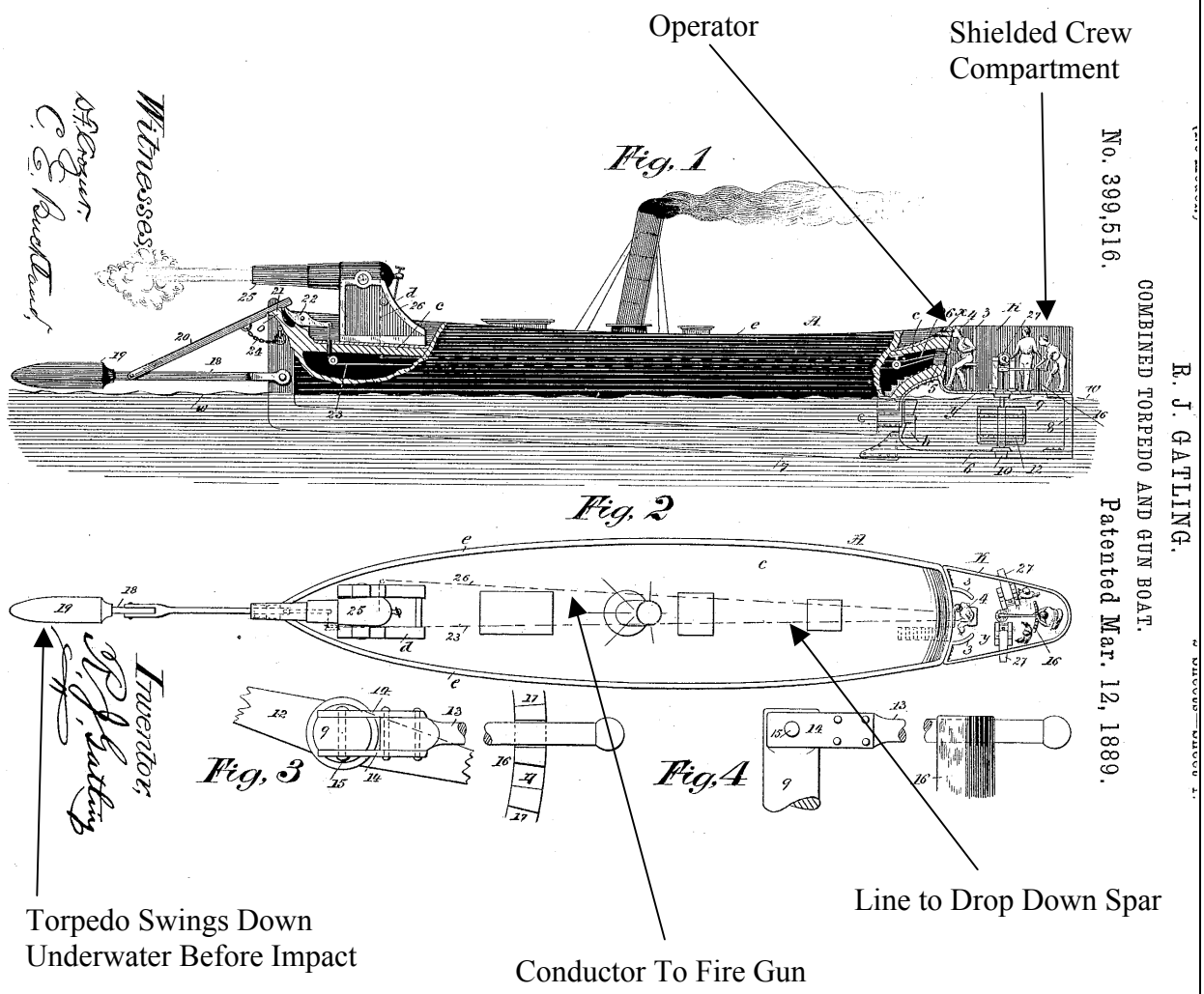

399,516 R.J. Gatling	Mar. 12, 1889	**Combined Torpedo And Gun Boat**

Yes, this inventor is the same Gatling, so the use of a gun in this patent should come as no surprise. What else would you expect from a man named "Gatling?" Even though this patent is not strictly related to the pre-torpedo inventions presented so far, it was too good to pass up.

With his Gatling Gun fame behind him (Patent No. 36,836 of Nov. 4, 1862), Gatling turned his attention to torpedoes and torpedo launches. Since this weapon was to have a crew on board, would this device be a torpedo launch or a manned torpedo? Note that in this patent the word "torpedo" reverts back to meaning an explosive charge at the end of a spar boom (not unlike the weapon used by Lt. Cushing during the Civil War).

Gatling sought a "light-running and noiseless steam-launch of great speed" to carry his "explosive holding and projecting devices." One feature of the boat was a main deck that inclined upward toward the stern to deflect incoming bullets and shells. A compartment at the stern of the vessel was to be shielded with iron plates for the protection of the crew, although it was left open at the top for ease in escaping "by jumping over its sides." Or the crew may remain and fight on using one or more Gatling Guns.

A somewhat odd suggestion was to use "crude petroleum or other hydrocarbon" because by using this type of fuel the "smoke-pipe may be dispensed with, and all smoke or other indications of fire … be avoided." Is he suggesting a propulsion plant where there is no exhaust? He is probably referring to the potential of a reduction in black smoke when the fuel supply is fuel oil rather than coal.

The spar was on a pivot to enable it to be pitched down under water just before impact in order to explode below the waterline of the target vessel. The operator in the aft compartment pulls a lanyard to release the spar boom. The launch was also equipped with a gun "as a further offensive armament" to be used for "throwing a high explosive" at the target ship. The combined use of both weapons "is much more efficient to destroy an iron-clad ship than either one alone, for the ship is thereby struck above and below the water-line."

Gatling cites several advantages of his invention over conventional torpedoes of that time period: (1) "carries with it the intelligence of an officer in command," (2) possesses the destructive power of the combined gun and spar explosive, (3) is assured of hitting the target because it is steered from within the weapon, and (4) has a greater range than conventional torpedoes.

A startling omission is any reference as to the fate of the crew following the twin explosions. Other than jumping over the side (with its possibility of being picked up by an angry enemy), how is the crew supposed to bring the launch back to base to repair and reload it?

Patent # Inventor	Date Granted	Title
442,327 G.R. Murphy	Dec. 9, 1890	**Mechanism For Controlling Torpedoes, &c.**

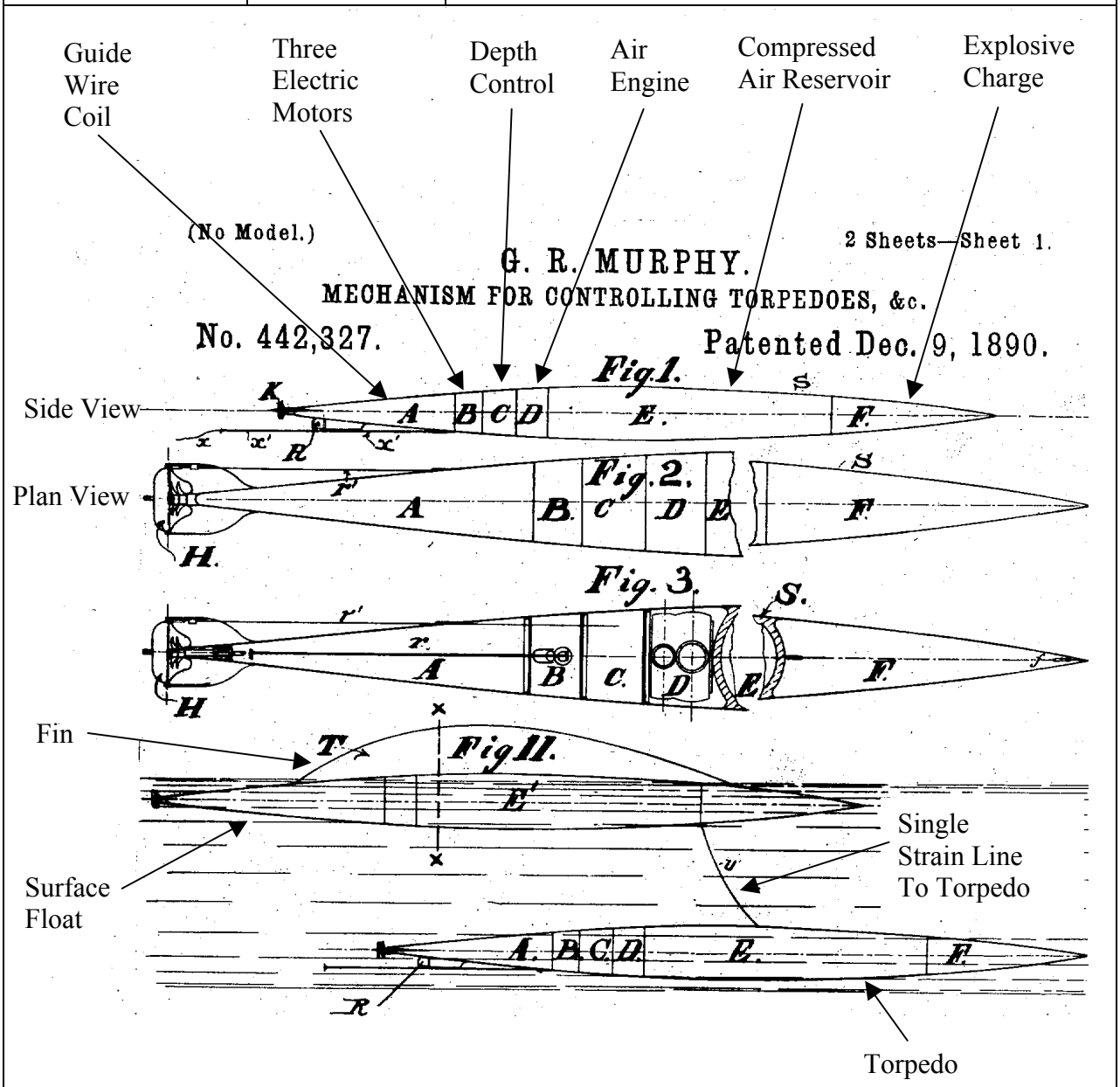

442,327 G.R. Murphy	Dec. 9, 1890	**Mechanism For Controlling Torpedoes, &c.**

This patent describes methods to propel, control, steer, and explode the charge of a torpedo used for harbor defense, and these features are supposed to be improvements over the Whitehead Torpedo.

Providing torpedo control is the main theme of this patent and it is accomplished by systems in groups of threes: (1) three function switches on shore, (2) three copper conductors in a guide wire, and (3) three control motors ("magneto-electric motors") in the torpedo.

First, the guide wire is a neutrally buoyant, 3-conductor cable protected by a gutta-percha or India-rubber insulation layer. There is no cable reel; instead the cable is just coiled inside the last compartment of the torpedo. A cable-locking device prevents cable payout until the tension in the cable reaches 5 to 7 pounds or the engine air throttle valve has been opened all the way and the engine begins driving the torpedo through the water at full speed. More cable is coiled at the shore site control station to ensure there is little tension in the cable at the torpedo as it is being deployed.

The three switches on shore are used to control the various functions of the torpedo by varying the current intensity or reversing the current flow in each conductor (changing the polarity). The cable is strong enough to be able to retrieve test torpedoes following practice sessions or to recover torpedoes that failed to detonate on command.

One of the shore switches, wire conductors, and motors in the torpedo controls the compressed air throttle valve. Changing the polarity of the current in this conductor changes the valve function from opening to closing (another polarity change and the valve begins to open again). Different current intensities mean different engine speeds and this changes the velocity of the torpedo through the water. This motor also pulls on a line that releases the cable lock and allows the cable to be payed out.

Another switch/conductor/motor set assembly controls the rudder. By changing the polarity of the current the rudder is made to switch sides and the current intensity tells the rudder how far to swing over (this provides variable rudder angle control, as opposed to just full-starboard or full-port rudder).

The third switch/conductor/motor set drives the "horizontal rudder" (diving plane) and fires off the explosive charge (detonation on impact is also provided).

The electric current flowing in these conductors is produced by a "…dynamo-electric machine…" driven by a "…water-wheel, windmill, or the like…" on shore.

The technique of both varying the intensity and changing the polarity of the D.C. current in one of the conductors to signal a function change down at the torpedo is an early form of signal coding.

This invention does not dwell on the depth keeping ability of the torpedo as the inventor has something else in mind to place the explosive charge at the proper depth. He dismisses depth control via the 'horizontal rudders" with the statement that the vessel carries a "…depth-registering apparatus of ordinary construction..." He then offers a not-well-thought-out modification to his invention by eliminating the depth regulation device all together and replacing it with the usual surface float. Although the way he describes it may not work. The float is to be self-powered like the torpedo (to have "…a certain velocity of its own, so that it shall not be a drag upon the torpedo…"), but operate at a speed "…five knots an hour (sic)…" slower than the torpedo and it is to be connected to the torpedo by a single line. It shouldn't take too long for a collision at sea to occur. What was he thinking?

Patent # Inventor	Date Granted	Title
450,875 W.S. Sims (with Thomas Edison)	Apr. 21, 1891	**Electrically Propelled and Steered Torpedo** (Also known as the Sims-Edison Torpedo)

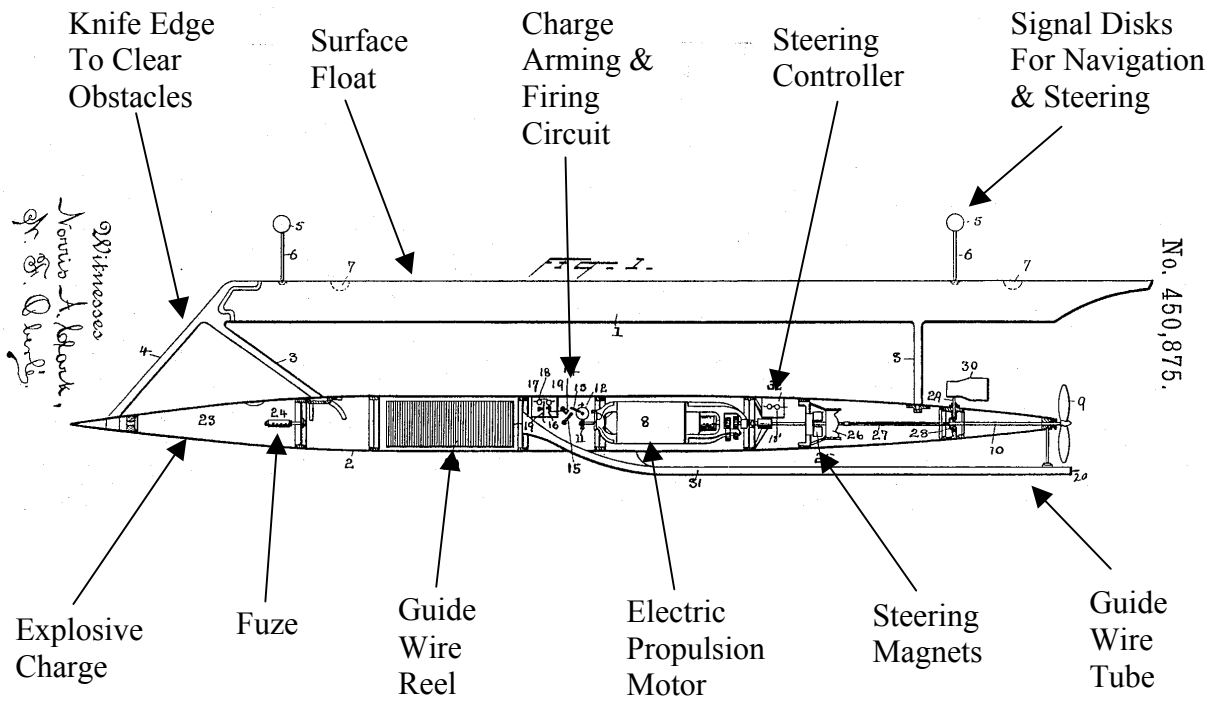

The Classic Pre-Torpedo

450,875 W.S. Sims (With Thomas Edison)	Apr. 21, 1891	**Electrically Propelled and Steered Torpedo** (Also known as the Sims-Edison Torpedo)

This is an update, by the inventor, to his Patent No. 319,633 of June 9, 1885, and can be considered the classical Pre-Torpedo concept. The overall configuration of the vehicle is like that described in the earlier patent, with this patent addressing the propulsion and steering electrical circuits. Electro-magnets, large and small, along with some relays, make up the state-of-the-art electrical components involved in this invention.

The torpedo described is propelled by an electric motor with the electricity coming from a "dynamo" (or engine – generator set) at a shore station or other command center. The steering gear "steering magnets" are also powered by electricity. Plus it takes an electrical current pulse in the firing circuit to detonate the explosive charge.

Reversing the polarity in a Direct Current circuit is one way of sending a signal down a cable to tell the circuit components to accomplish a different task. In this case an easy way to reverse the polarity is to just switch the two leads at the source, either a battery or at a "dynamo." The conductor that was once carrying the "positive" current is now, after the leads are switched, carrying the "negative" current. When this happens in this invention a signal is sent down the cable to activate the firing circuit and set off the explosive charge. (No mention is made of a contact fuze to set off the charge on impact.)

All this current travels to the vehicle in a power conductor within the guide wire cable. A second smaller and lighter conductor in the guide wire connects a battery at the remote control station to an onboard steering control electro-magnet. By reversing the polarity at the battery in this circuit the larger "steering magnets" are made to swing the rudder from one direction to the other (either full port or full starboard rudder). It was stressed that the tube deploying the guide wire runs all the way aft to a point under the propeller (to protect the guide wire), a technique used to this day.

One unique feature is the firing circuit safety switch. The electric motor drive shaft must complete 300 revolutions before the explosive charge is armed, i.e., the firing circuit closed and ready for action.

Another safety circuit protects the high current contacts that operate the steering magnets. A bypass circuit allows these contacts to be made and broken (to change the rudder direction) without sparking or pitting of the terminal posts.

With the help of Thomas Edison this patent was turned into actual hardware and at-sea trials were conducted in 1892. Some of these torpedoes were placed in service with some foreign navies.

The fact that the Whitehead torpedo had been available during the development of this pre-torpedo (and during the writing of many of these patents) didn't seem to stem the flood of "improvements" offered by so many inventors.

A good description of this device can be found on pages 6 and 7 of *Undersea Thunder: Torpedoes With Brains,* located in the library (V850.U5 1958) at the Naval Undersea Museum, Keyport, WA.

Patent # Inventor	Date Granted	Title
453,861 N.J. Halpine	June 9, 1891	**Marine Torpedo**

Engine And Fuel Supply Not Shown For Clarity

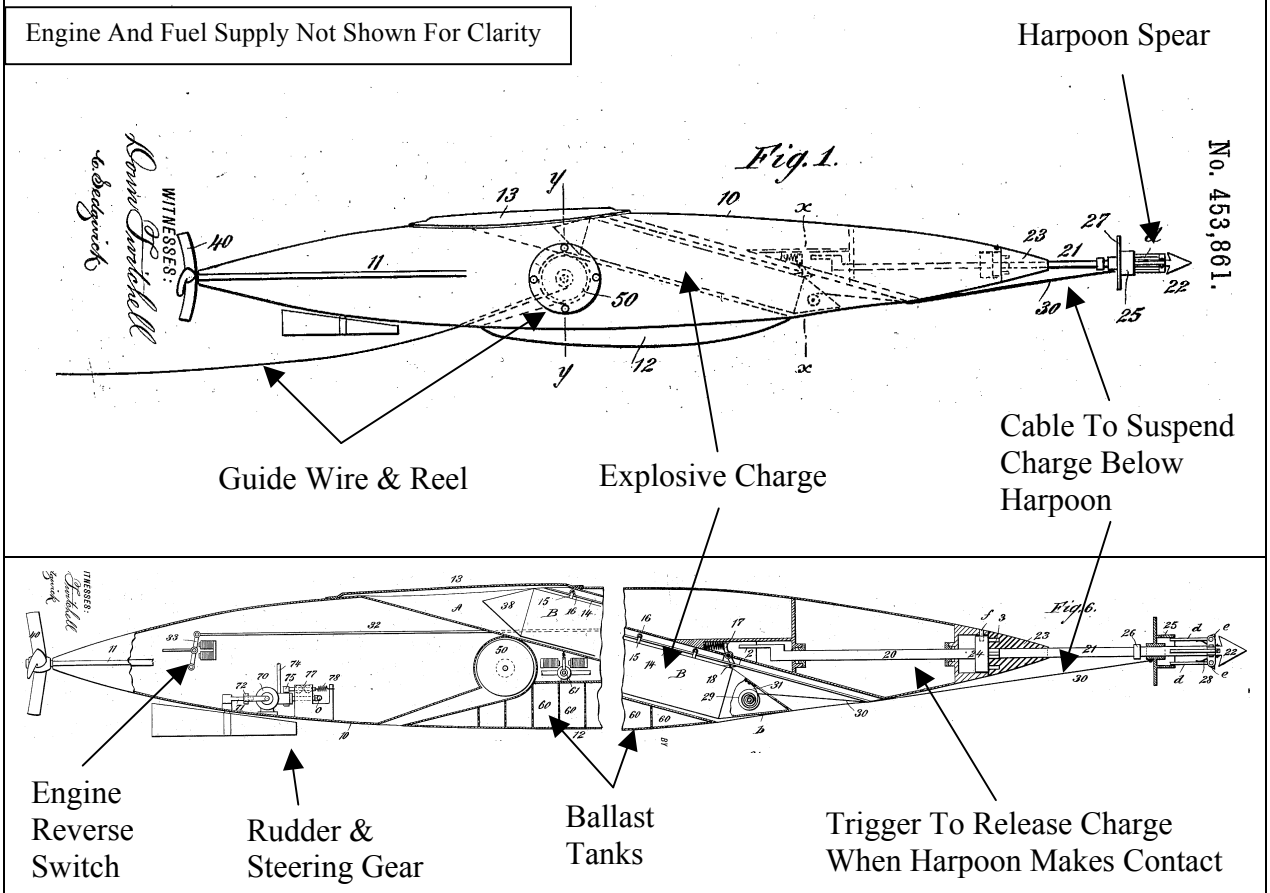

453,861 N.J. Halpine	June 9, 1891	**Marine Torpedo**

Apparently this inventor and the inventor listed on the next page, A.W. Savage, read Patent Nos. 39,612 and 219,711 and then decided to combine the two. The result turns out to be the world's first "Green" torpedo. It's designed to come home and be re-armed after dropping off its explosive charge. It's a reusable torpedo, and shouldn't be confused with a mini underwater whaling ship.

The hull contains an inclined tube-shaped opening for the explosive charge (like Patent No. 39,612) and a harpoon shaped spear in the nose (like Patent No. 219,711). The main emphasis of this patent centers around the description and use of these two features. Aspects of propulsion, guidance, and control are not addressed, except to point out that changes in the various functions are accomplished using electro-magnets.

Three cases are given for the use of the harpoon spear: (1) against a wooden-hulled ship with no anti-torpedo nets where the torpedo is to back away after impacting and releasing the explosive charge (leaving the harpoon stuck in the wooden hull with the charge hanging below it), (2) against a ship with an anti-torpedo net where the harpoon is designed to snag on the net (and apparently leave the torpedo hanging onto the net, as this impact would probably not sever the safety pin to free the vehicle from the charge), (3) against an armor-hulled ship where the vehicle would bounce off the iron hull, but free the explosive charge (would it then sink out of effective range or drift away before exploding?).

When this weapon, useful primarily against moored or anchored targets, hits the target ship several things were designed to happen: (1) the harpoon would stick if the hull was made of wood, (2) the explosive charge would be released and slide out of the torpedo to hang below the harpoon, (3) the fuze timer was to be activated, and (4) the engines would be put in reverse to back away from the impending explosion.

Advantages:

The vehicle is reusable and can be reloaded for another deployment. The impact places the explosive charge below the hull.

Disadvantages:

The launching process is complicated by the need to install, arm, and safe the explosive charge before launch. Two torpedoes would be needed to attack a ship protected by an anti-torpedo net (the first one blows a hole in the net, if the timer could be started by the launching crew, and the second torpedo would then have to slip through the hole to attack the target). This scheme appears to work best only when the target has a wooden hull with no protecting anti-torpedo net.

Patent # Inventor	Date Granted	Title
456,278 A.W. Savage	July 21, 1891	**Marine Torpedo**

Much Detail Omitted For Clarity

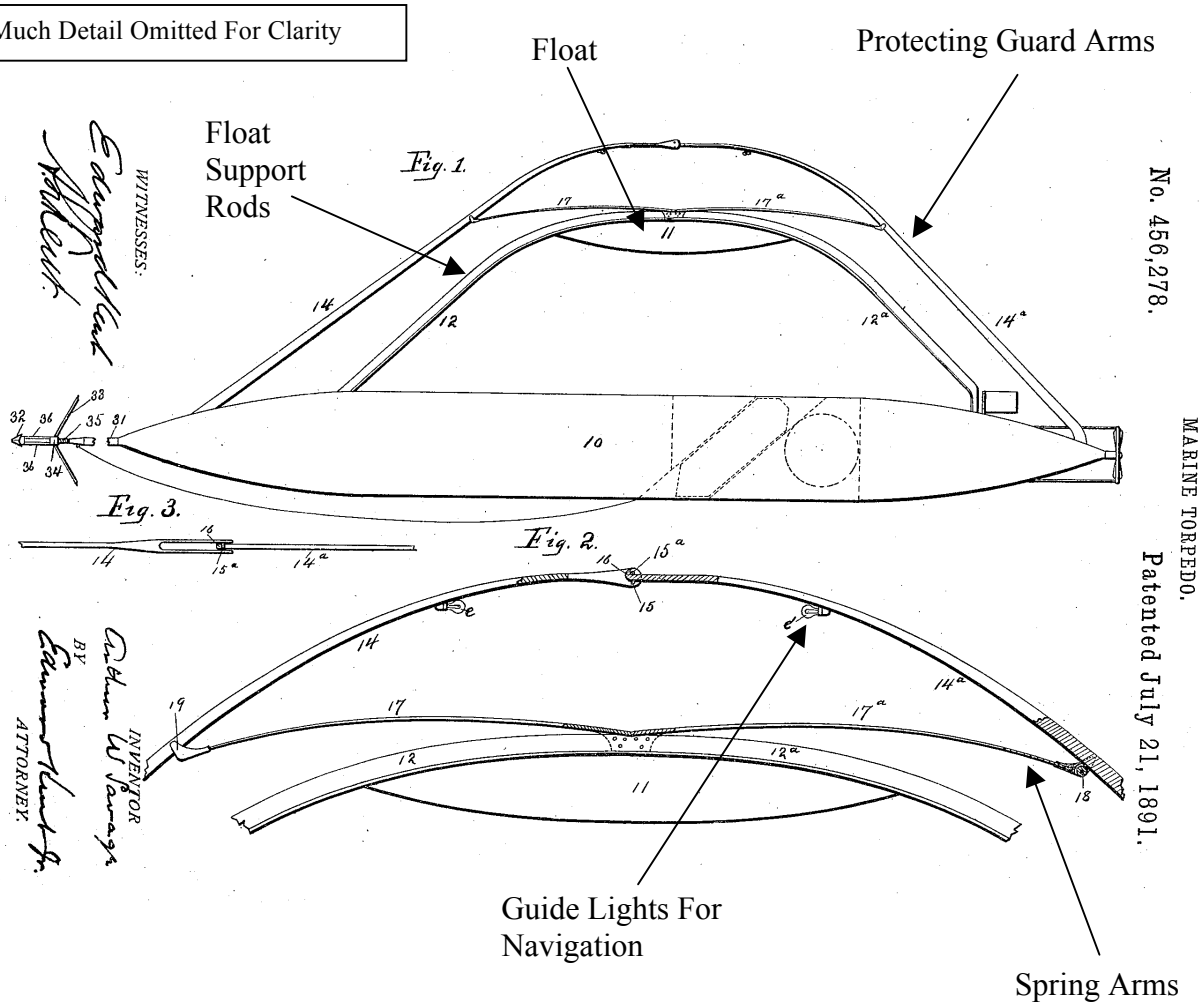

456,278 A.W. Savage	July 21, 1891	**Marine Torpedo**
A.W. Savage, along with the previous inventor, N.J. Halpine, is credited with developing the Savage-Halpine Torpedo, which was actually built and tested. But since little is known about this vehicle it is hard to say whether or not any of that torpedo technology is reflected in the three patents written by them. After their collaboration on the development of their torpedo, did they go their separate ways and write competing patents? The inventor begins to describe his version of the torpedo in this second patent, then ends the description before covering much detail. He tries again in the next, and third, patent in this group. This is another in the class of torpedoes suspended beneath a float with two sighting lights on top for navigation. The float is attached to the torpedo by two arched support rods. And a second pair of protecting guard arms extends over the float and contains the two lights. What's new here is the use of the protecting guard arms to keep debris from fouling the torpedo on its way to the target. Since this second set of arms is free to pivot in their connections at the hull of the torpedo, a set of springs hold the guide arms above the arched support rods. These "yieldingly-mounted" guard arms allow the debris to roll over the top of the torpedo.		

Patent # Inventor	Date Granted	Title
456,524 A.W. Savage	July 21, 1891	**Marine Torpedo**

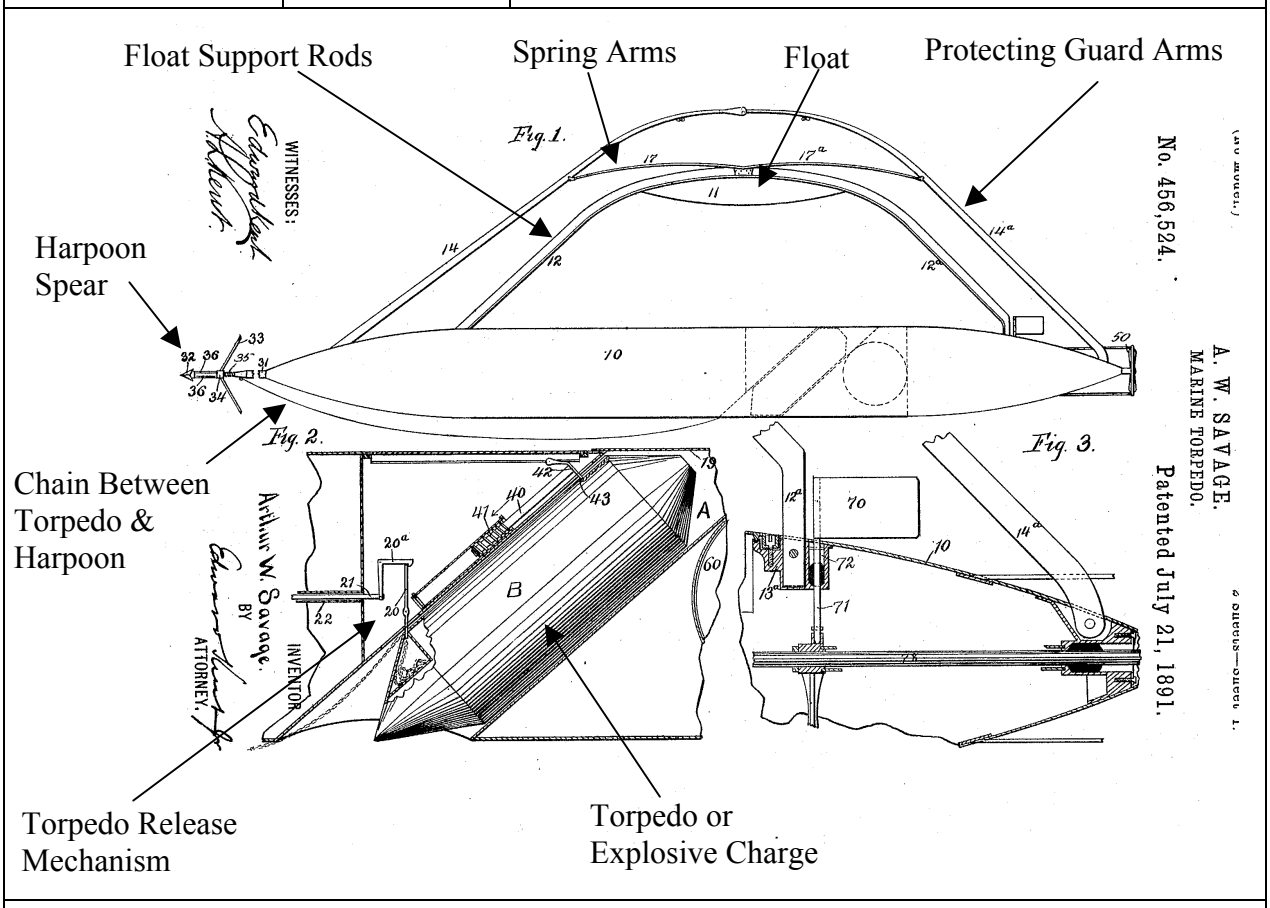

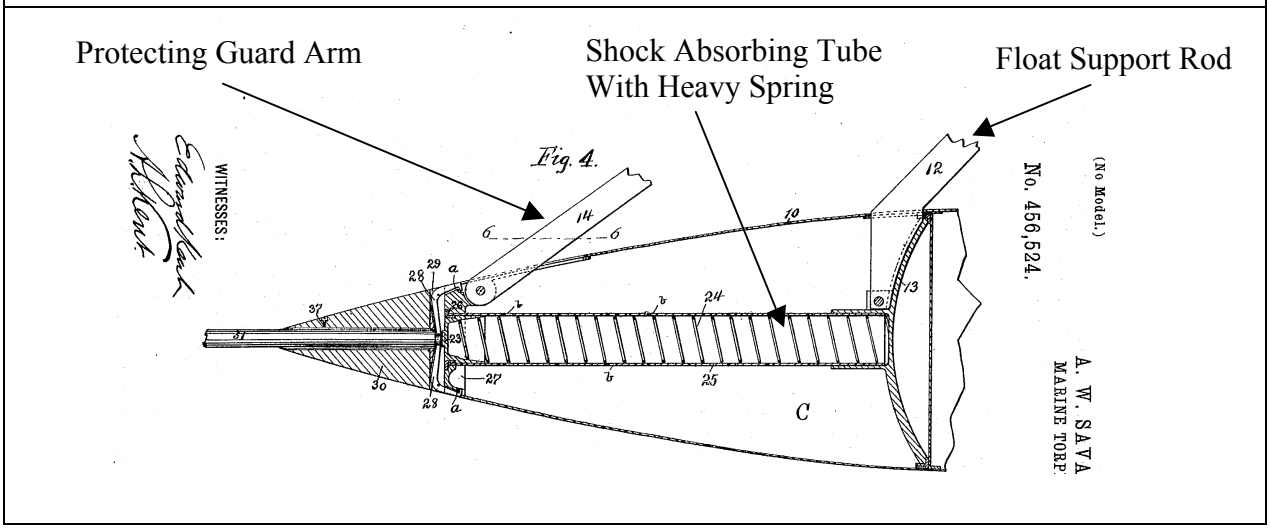

456,524 A.W. Savage	July 21, 1891	**Marine Torpedo**

Externally, this patent looks very similar to the inventor's previous patent, Patent No. 456,278 of the same date, but in this one the inventor describes more of the internal details.

It shows the same basic layout of a torpedo supported by a dual set of rods curving over the top of the entire length of the vehicle with a buoyant float suspended on the lower arm. The guard arm and springs protect the torpedo from floating obstructions, as before.

Key features here include automatic deployment of the explosive charge, providing a shock absorbing capability during the impact, and backing away from the target's hull upon release of the charge.

The torpedo and torpedo chamber are covered in some detail as well as a mechanism to release the charge when the harpoon spear strikes the hull. Upon release the charge is spring loaded to pop out of the chamber and swing down under the harpoon. When fired against an anti-torpedo net the harpoon will deploy a set of blades to catch on the net, and apparently, if the net is rigid enough, release the charge.

What happens next wasn't too well thought out. After the torpedo swings down under the net it is supposed to be pulled back up the other side, by the line between the charge and harpoon, and "will rise and will explode at a point directly beneath the vessel's hull." Playground swings to play on in air work quite well, but divers never use them underwater; the drag is just too great. With luck the explosive charge may wind up below the net and just blow a hole in it.

Energy from storage batteries installed within the torpedo hull and signals in a deployed guide wire are the preferred means to power and control the vehicle. But no details of the mechanics of steering or propulsion are given except to state that the vehicle is to be "…driven at an exceedingly high rate of speed…" Since the torpedo is to back away from the impact and be driven back to base for reuse, some form of shock absorption must be included. For this the inventor forgets about the near incompressibility of water at the stated "exceedingly high rate of speed" and provides a "heavy spring" inserted in a tube with a few holes along the side. During the impact this tube will most likely act like a solid ram and push itself into the middle of the torpedo, rather than cushion the blow. The water will not be able to vent away from the inside of the tube fast enough to allow the spring to absorb any energy; it will just pass it on. (Another case of What Was He Thinking?)

This is the first patent where a sealing element (like an O-Ring) has been shown surrounding a rotating shaft.

Patent # Inventor	Date Granted	Title
559,711 L.F. Johnson W.J. Slacke H. Lacy	May 5, 1896	**Marine Torpedo**

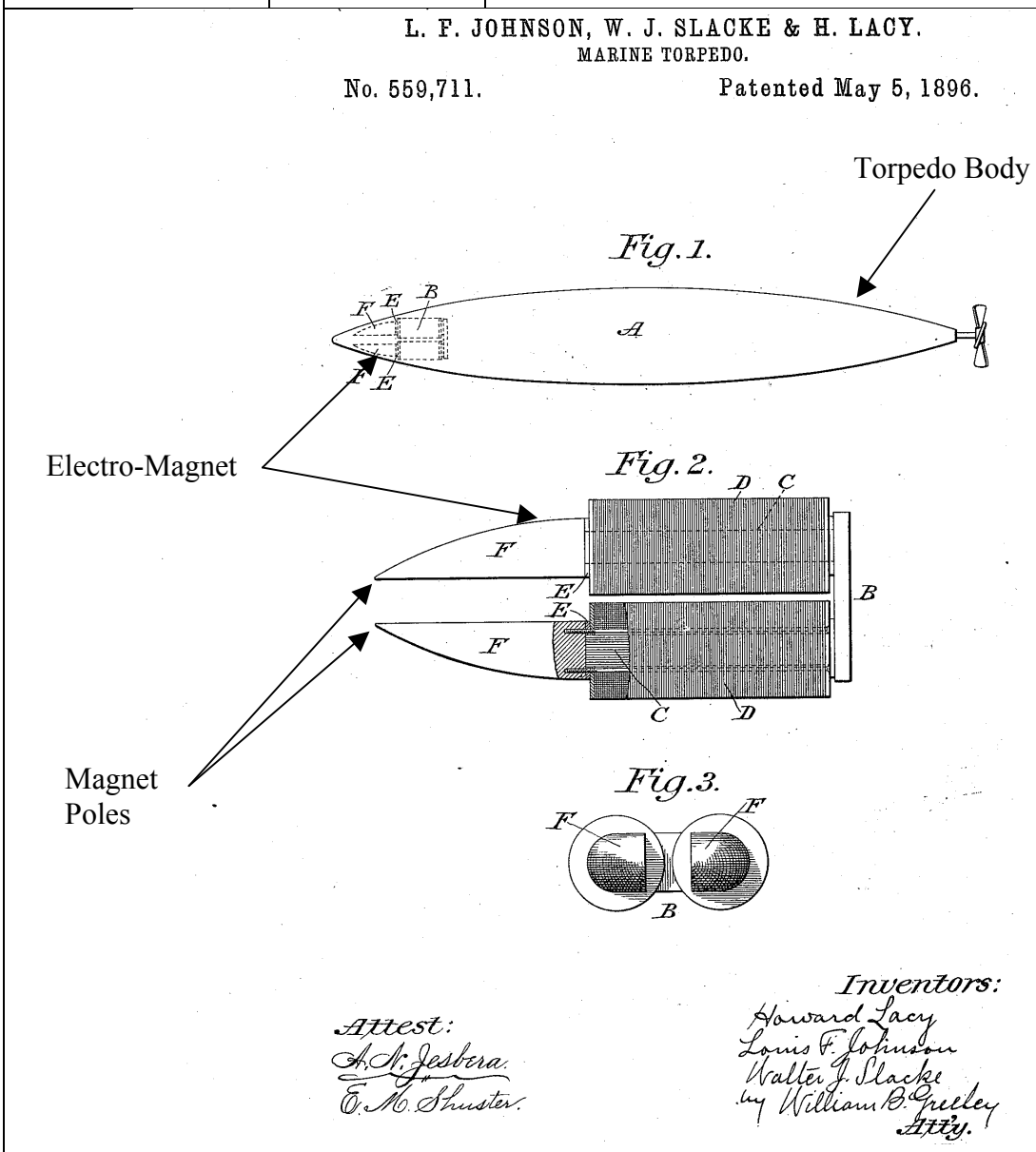

Magnetic Attraction

559,711 L.F. Johnson W.J. Slacke H. Lacy	May 5, 1896	**Marine Torpedo**
It is possible that this inventor is trying to solve a problem that may not exist. That is, trying to attach an explosive charge to the side of the hull of a target ship and keep it there until the torpedo operator decides to detonate the charge. Apparently, the inventor finds some tactical advantage in having the explosive charge attached to the hull for some period of time before detonation. Torpedo attachment is to be accomplished with a powerful electromagnet in the nose of the torpedo. According to this patent the magnet will be sufficiently energized "to attract the torpedo to and hold it against the iron or steel vessel … until the time of explosion." This concept uses what could be called active magnetic attraction to seek out the hull of the target vessel during the terminal homing phase of the approach. This is not the passive magnetic influence approach used most infamously in the Mark 6 Magnetic Influence Exploder on the Mark 14 Torpedo during World War II. In this patent the homing sensor is just a large electromagnet. It projects a magnetic field in front of the torpedo and hopes an iron or steel hull will come within its range. Two other patents have suggested the use of magnets as a means to attach an explosive charge to the hull, Patent Nos. 222,718 of Dec. 16, 1879 and 225,465 of Mar. 16, 1880. But these early ideas would have used a large number of horseshoe permanent magnets.		
Disadvantages: Unless a smooth, non-rusted, paint free (i.e., bare metal) spot on the hull can be found, the resulting attachment is likely to be very weak. With the magnetic sensor in front, the torpedo's explosive charge would probably have to be behind it, which would lessen it's destructive effect on the hull. Magnetic attraction is not a very long range force (its range is often overestimated), so the initial guidance would have to be good enough to place the torpedo in close to the hull. During the terminal homing maneuver no steering control system is identified in the patent (but may not have been considered necessary by the inventor). The drag force created by a ship underway would probably overpower the magnetic attractive force generated by the torpedo, with the result being the removal of the torpedo.		

Patent # Inventor	Date Granted	Title
627,312 A. Van Bibber	June 20, 1899	**Torpedo**

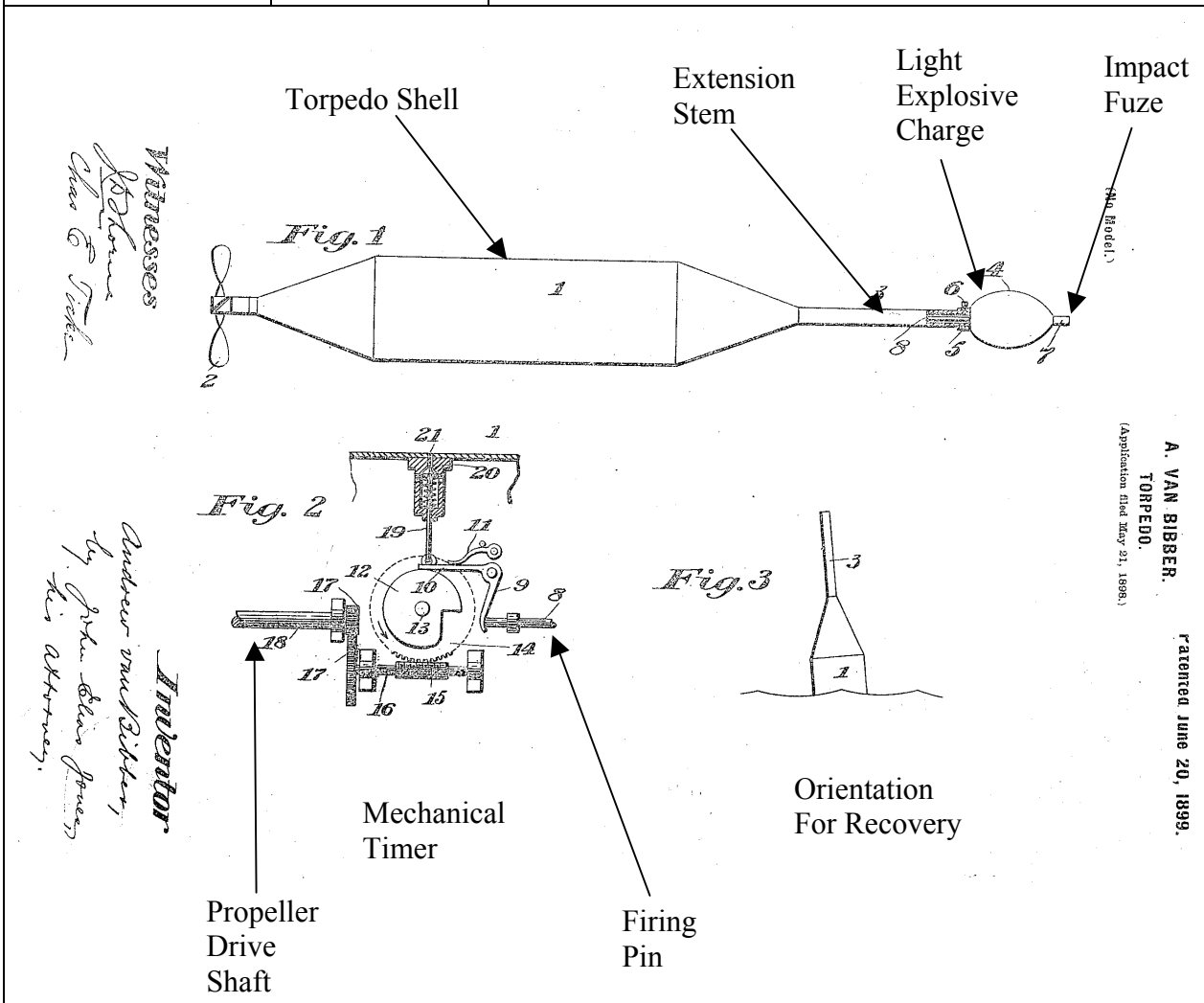

Exercise Torpedo

627,312 A. Van Bibber	June 20, 1899	**Torpedo**
The dedicated exercise torpedo is invented in this patent. It is to be a simple and cheap device for training and practice operations. However, being a torpedo, an explosion is expected at the end of its run. It's a little explosion from a "light explosive charge" and is set off when the torpedo hits the target, thus signaling a successful training run. No damage to either the target or exercise torpedo is expected as a result of the impact; it is just expected to be "audible." There is one bothersome feature of the design as presented by the inventor. The torpedo is to be neutrally buoyant in a horizontal orientation prior to impact and vertical, to ease recovery, following the exercise. To make the change in buoyancy the practice charge is provided with lead weight to keep the bow horizontal until the charge is blown away. The inventor adds weight to the charge "by mixing leaden balls with its explosive charge to counteract the buoyancy of the forward end…" It can only be hoped that as the lead balls fly out from the explosion they won't damage the target's hull, too much. Should the torpedo miss the target, a second firing circuit is employed using a mechanical timer. This device works off the spinning propeller shaft and trips the firing pin at some time after engine startup when the torpedo should have traveled the distance to the target. This timer also shuts down the engine by venting out the remaining gas from the gas storage reservoir. This safes the torpedo at end-of-run.		

Patent # Inventor	Date Granted	Title
632,089 T.E. Barrow	Aug. 29, 1899	**Automobile Torpedo**

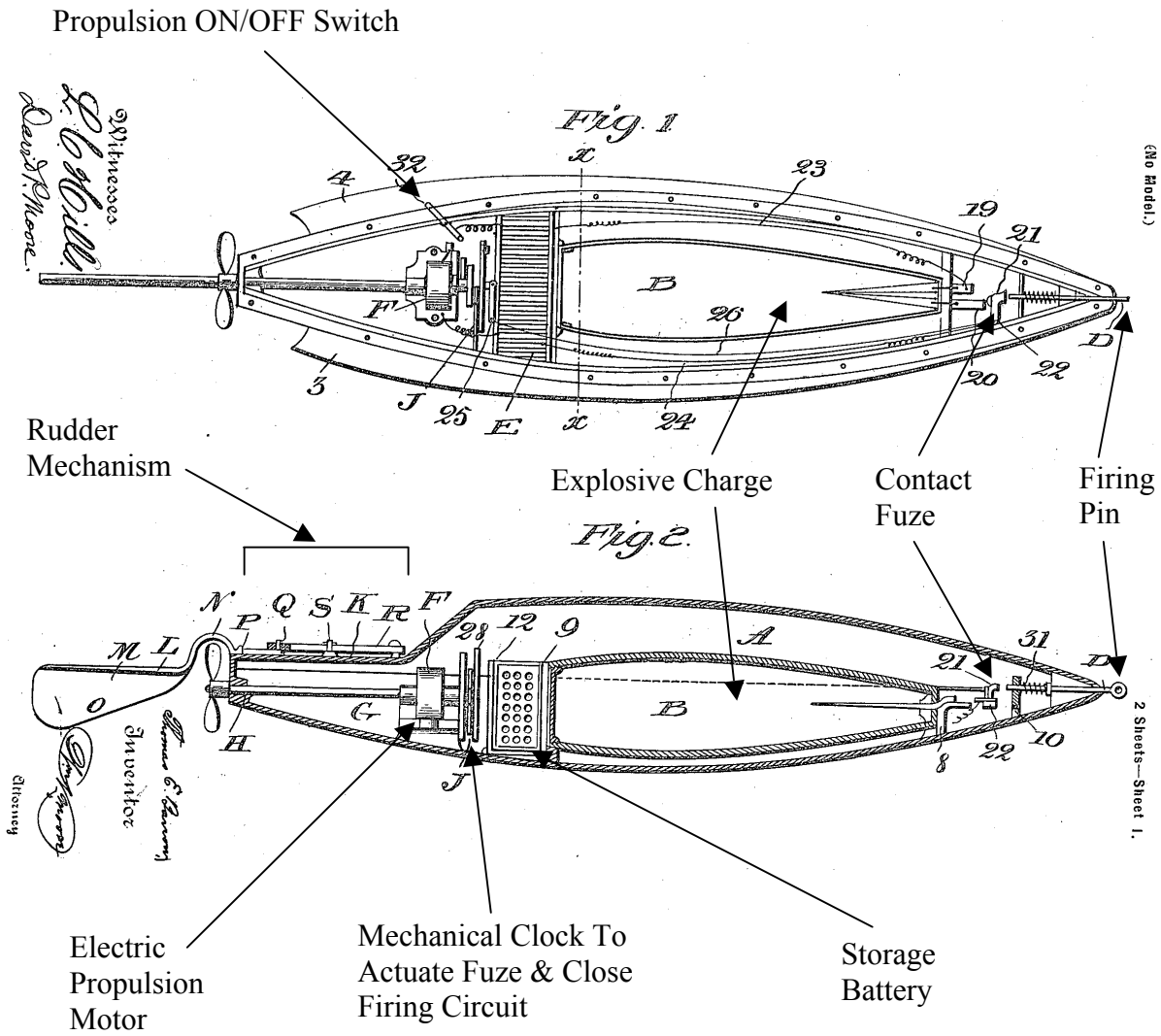

632,089 T.E. Barrow	Aug. 29, 1899	**Automobile Torpedo**

This unique looking torpedo, with a hull shape that is quite modern despite being designed 110 years ago, has a large number of stated objectives:

- Construct a torpedo that is not tube launched, so it has to be "placed in the water and pointed toward the object to be destroyed."
- Provide warhead detonation by impact or by a mechanical timer. The timer is based on a clock mechanism and will close the contacts of the firing circuit at any desired time without the need of the firing pin in the nose to make contact with the target. The timer physically pulls the firing contacts together to close the firing circuit and ignite the explosive charge. One stated use for the timer is when the torpedo gets caught in an anti-torpedo net and detonates at the designated time to blow a hole in the net.
- Have the explosive charge in a container separate from the shell of the torpedo.
- Provide an electric firing circuit to ignite the explosive charge, triggered by impact or the mechanical timer. The energy to set off the charge in the firing circuit, as well as the energy to drive the propulsion motor, comes from an on-board storage battery.
- Provide a rudder control mechanism that keeps the rudder amidships. No steering control is mentioned, just a set of springs to keep the rudder amidships. Holding the rudder still in this manner will probably not guarantee a straight and true course to the target.

This is the first use of the term flexible packing (or gaskets) between flanges to make a watertight seal.

Advantages:

The explosive charge and battery can be stored separately to make the use and handling of the weapon safer.

The hydrodynamic shape is rather modern.

Disadvantages:

Must be assembled prior to launching (battery, explosive charge, and associated wiring).

There is no steering control.

This is a surface runner and does not submerge. It would be most effective if used during daylight hours and launched when close to the target since it is a point-and-shoot device.

Patent # Inventor	Date Granted	Title
896,921 E.J. Kelley	Aug. 25, 1908	**Torpedo-Boat**

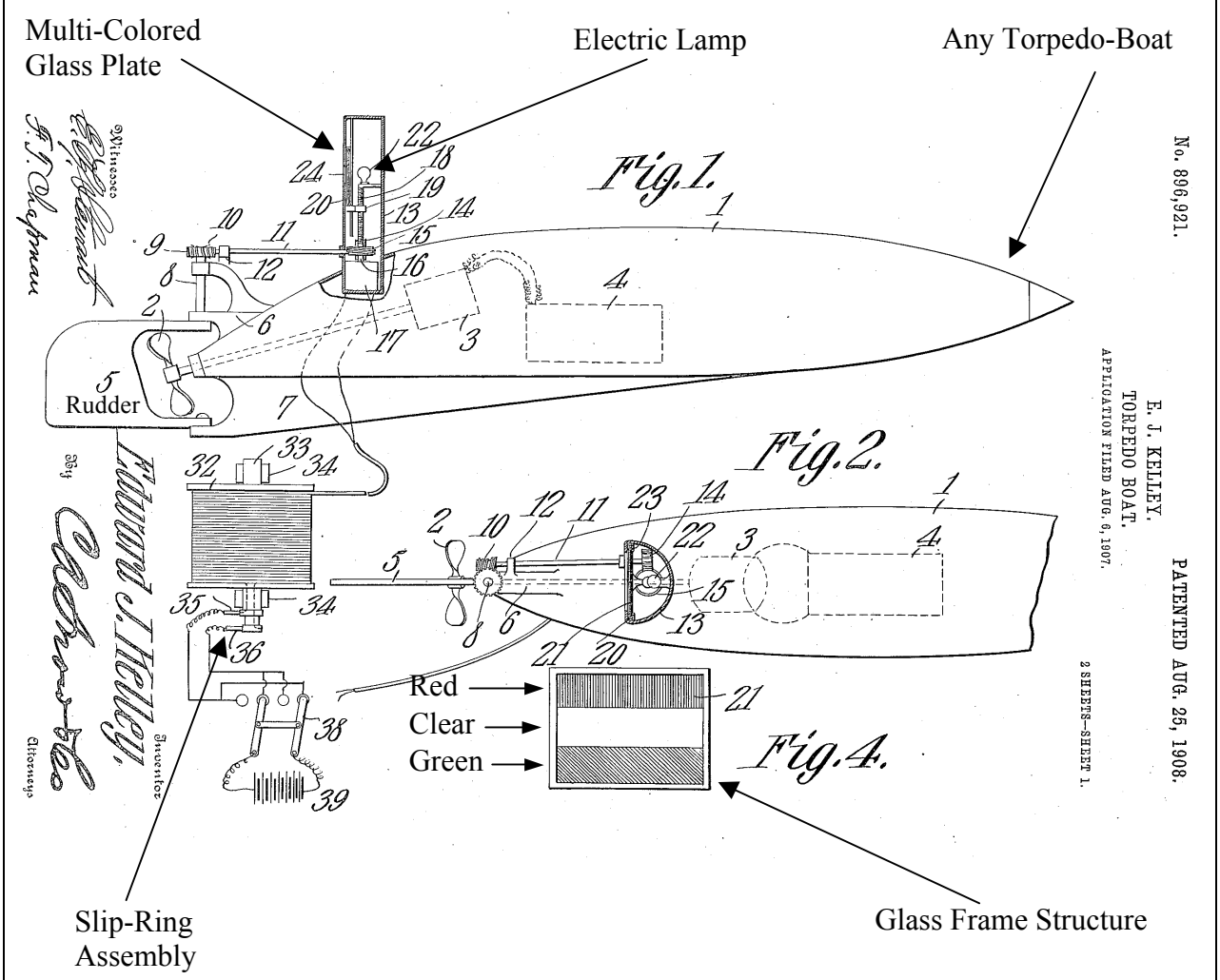

Multi-Colored Rudder Angle Indicator

896,921 E.J. Kelley	Aug. 25, 1908	**Torpedo-Boat**

This is another visual guidance invention for use in navigating a torpedo to a target at night and consists of a hooded, electric light visible from astern but not from the bow. What is unique here is that the color of the light, as seen by the operator, changes as the steering mechanism changes the rudder angle. This allows the operator to know when the torpedo is turning port (the light appears red), starboard (the light appears green), or going ahead (the light appears white).

The framing structure of the aft facing light is made up of three differently colored horizontal glass panels, red, clear, and green. Behind this multi-colored glass plate is a stationary lamp bulb. As the rudder is commanded to swing to port a gear driven linkage pulls the glass frame down so the red colored glass in directly in front of the lamp bulb. A swing of the rudder to starboard pushes up the glass plate until the light shines through the green glass panel.

The steering and sighting mechanisms are electrically powered from a cable running to shore or to another controlling vessel – with the cable reel at this remote station. The cable unwinds from the remote location, forcing the torpedo to drag this guide wire at all times during the trip out to the target.

Since the cable reel on shore pays out the cable from the outside of the reel, a slip ring and brush mechanism is needed on the reel's axle to convey the current to each conductor in the cable.

An independent onboard energy supply is assumed to drive the torpedo and to provide electricity to the lamp in the guide light, which is on continuously.

Disadvantages:

Even with a shielded light such as this, it seems likely the target would be alerted by the small amount of light reflected in the forward direction from the light striking the waves below and behind the light stand.

Also, it would be very hard to do a re-attack if the torpedo misses, as the torpedo would then be out of sight of the operator, on the other side of the target's hull, and the guide light will be visible and subject to counterfire from the target.

Patent # Inventor	Date Granted	Title
941,111 J. Tasto	Nov. 23, 1909	**Torpedo**

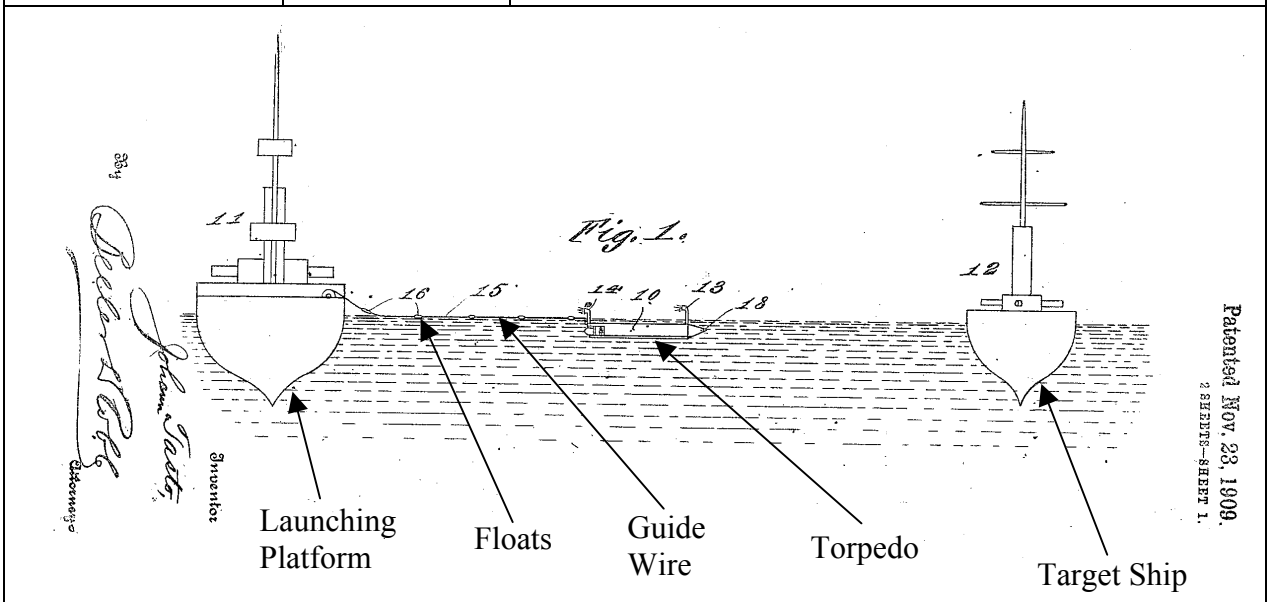

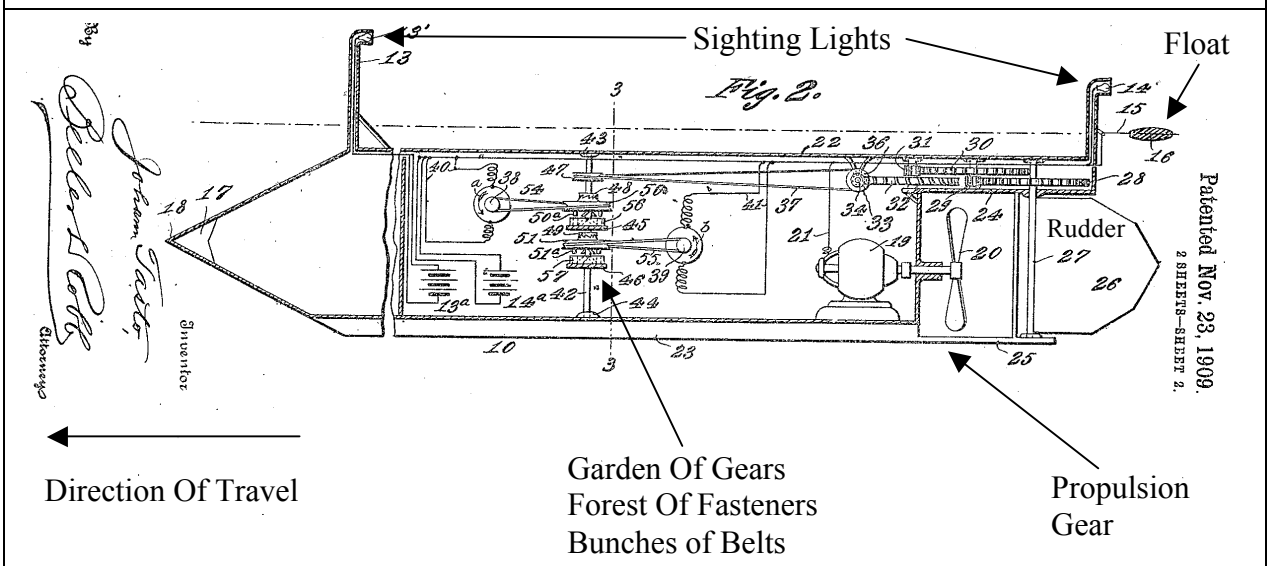

941,111 J. Tasto	Nov. 23, 1909	**Torpedo**
This invention covers a torpedo steering mechanisms and applies to electric, self-propelled, near surface-running torpedoes under remote control using a guide wire. Since it is implied that the cable can be buoyed by floats if necessary, that suggests the cable is payed out from shore, or from another ship, requiring the vehicle to haul it, and its floats, around as the torpedo maneuvers toward the target. For guidance the torpedo contains two above-water light standards of different colors, both facing aft (with the bow light being higher than the light at the stern). The grand scheme presented here is complicated by the inventor's love affair with the mechanical approach; involving numerous gears and worm gears, belts and belt pulleys, slidable pulleys, drive shafts, and toothed hubs, all in an effort to swing the rudder either port or starboard. Plus, to drive this complexity the steering mechanism described contains two electric motors, one to move all the above assemblage for starboard rudder and the other to move the rudder to port. Perhaps the inventor (a subject of the Emperor of Germany) sensed an upcoming war at sea and wished to face these torpedoes with their "peculiar advantage … of … simplicity and certainty of operation."		

Patent # Inventor	Date Granted	Title
995,138 G.P. Helfrich	June 13, 1911	**Water Jet Marker For Torpedoes**

G. P. HELFRICH.
WATER JET MARKER FOR TORPEDOES.
APPLICATION FILED FEB. 16, 1910.

995,138. Patented June 13, 1911.

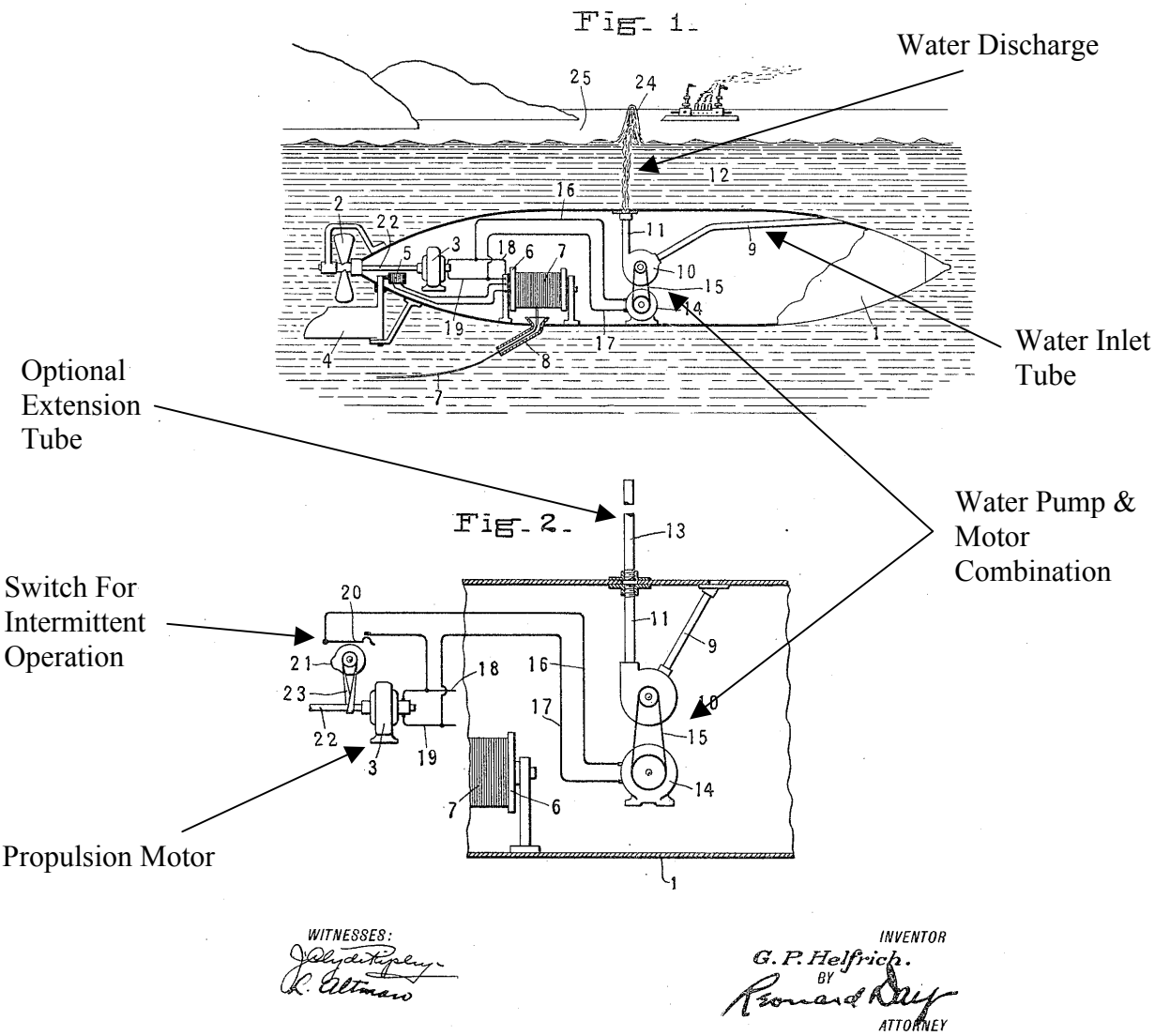

Torpedo with Geyser Tracking

995,138 G.P. Helfrich	June 13, 1911	**Water Jet Marker For Torpedoes**
This, and two other patents that follow, presents what should properly be called geyser guidance, a "Water-Jet Marker" that is immune to gunfire and can be used in daylight to locate the torpedo in both tactical and exercise situations. To cause this "elevation in the water," through the continuous or intermittent discharge of an "upwardly directed blast" of water, a water pump is used. The pump must be forceful enough to get the jet of fluid up through a tube to the surface, or through the water column itself above the torpedo, and high enough into the air to be visible.		
Disadvantages: Even though depth control would be of paramount importance as it (and the power of the pump, and nozzle sizes) determines the height of the water jet, the inventor made no mention of it in this patent. The extension tube from the water outlet opening at the top of the hull up to the surface would be subject to an extreme water drag force and would probably bend backwards or snap off, at any moderate torpedo speed.		

Patent # Inventor	Date Granted	Title
1,117,843 G.P. Helfrich	Nov. 17, 1914	**Torpedo**

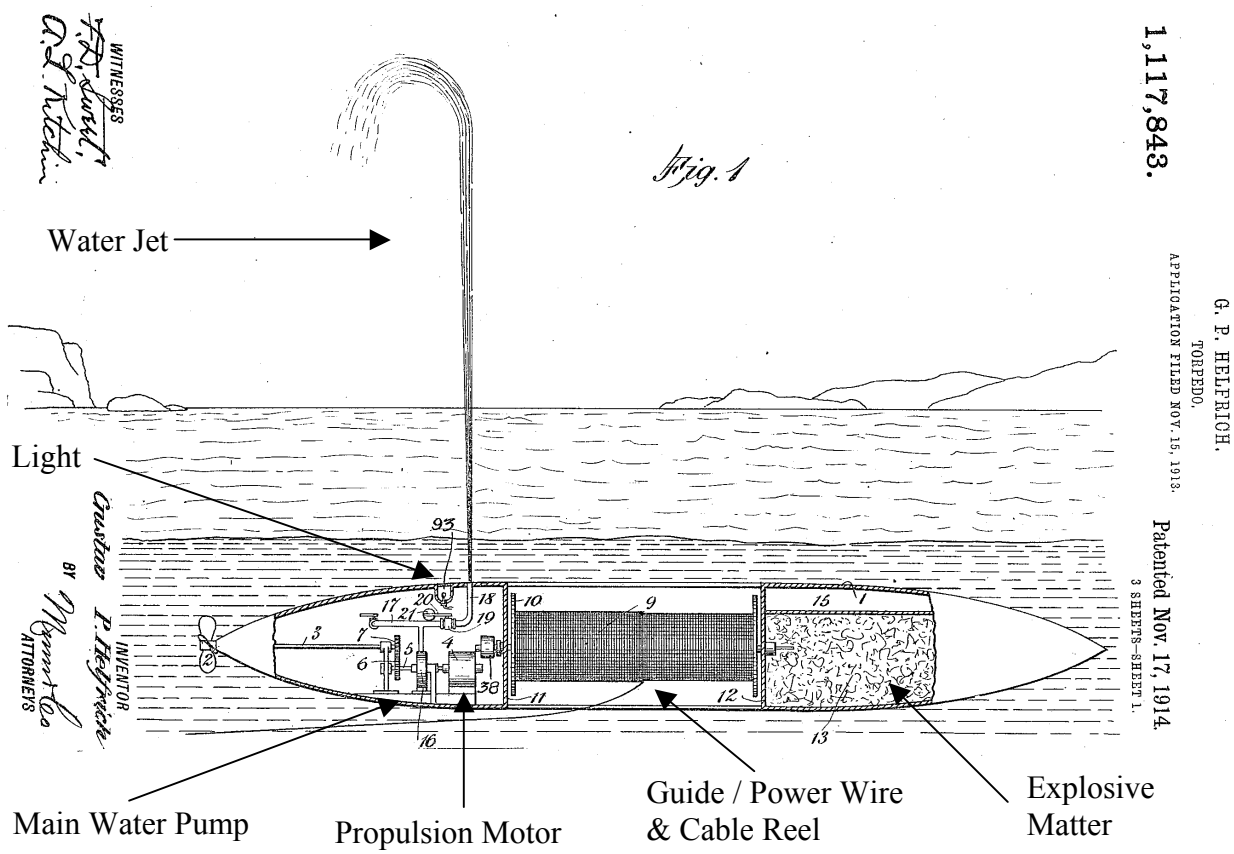

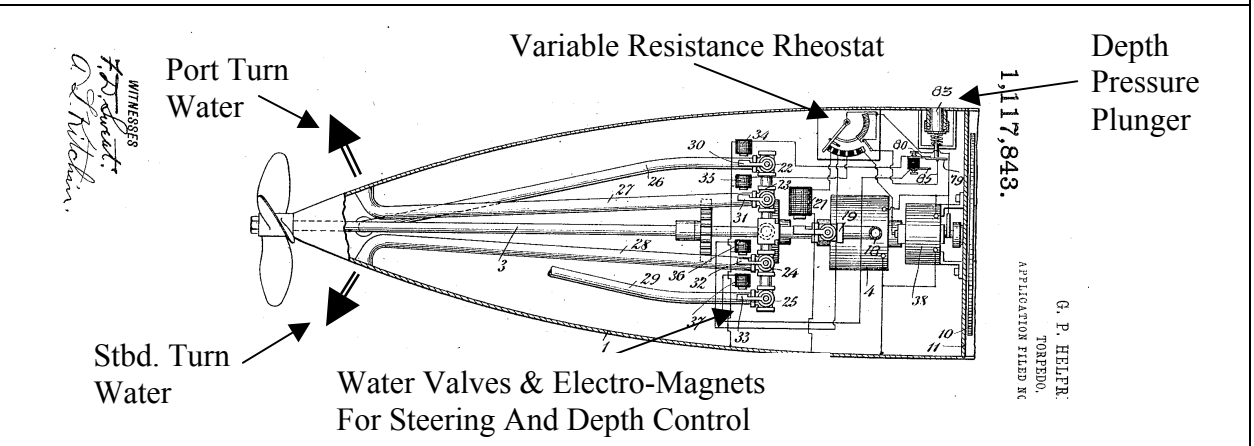

Another Torpedo with Geyser Tracking

1,117,843 G.P. Helfrich	Nov. 17, 1914	**Torpedo**

Here the same inventor, as above, adds a few embellishments to his former geyser guidance patent.

In the previous patent a single water pump is used to blast a jet of water vertically above the surface for navigation and guidance. In the scheme presented here more water pumps are added for use in steering and depth control, thereby creating a rudderless and finless vehicle (to provide a smooth hull). (Roll stability in this single propeller vehicle is obtained by having the cable reel inside the hull rotate in the opposite direction to the propeller.)

Two of the four additional water pumps blast jets of water horizontally from the tail section to control steering and two more blast water vertically for depth control. The electric motor for these five pumps receives its power from a shore-side energy source distributed to the vehicle via a cable payed out from a reel stored within the hull.

And, if the upward spray of water isn't odd enough, the inventor adds an upwardly pointed light, which illuminates the water jet as an aid to the vehicle operator in guiding the torpedo to the target at night. Alerting the target with an incoming geyser, by day, and an illuminated geyser, at night, will only serve to enable the target vessel to maneuver out of the way or to direct counterfire.

With five jet pumps, one light, and a charge activation fuze to control using only a single conductor (seawater return) cable, the inventor offers a novel "graduated solenoid structure" to control the distribution of current. This device is another variable resistance rheostat, where current at various resistances is split out at the vehicle to operate various onboard electro-magnets (with the no-resistance setting reserved for detonating the charge).

Five valves are described, each operated by turning a lever arm through the attraction of an electro-magnet. Somehow the inventor must have solved the tradeoff between having a small magnetic gap to allow magnetic attraction to work and a large rotation of the valve arm to ensure proper on/off operation of the valve. Magnetic attraction opens the valves and spring action closes them.

An early attempt at automation uses a "water acting … plunger" (pressure gauge) to attempt to maintain depth stability by controlling the vertical water blasts. This is the important consideration left out of the inventor's previous patent.

Patent # Inventor	Date Granted	Title
1,120,417 G.P. Smith	Dec. 8, 1914	**Indicator For Submarine Vessels**

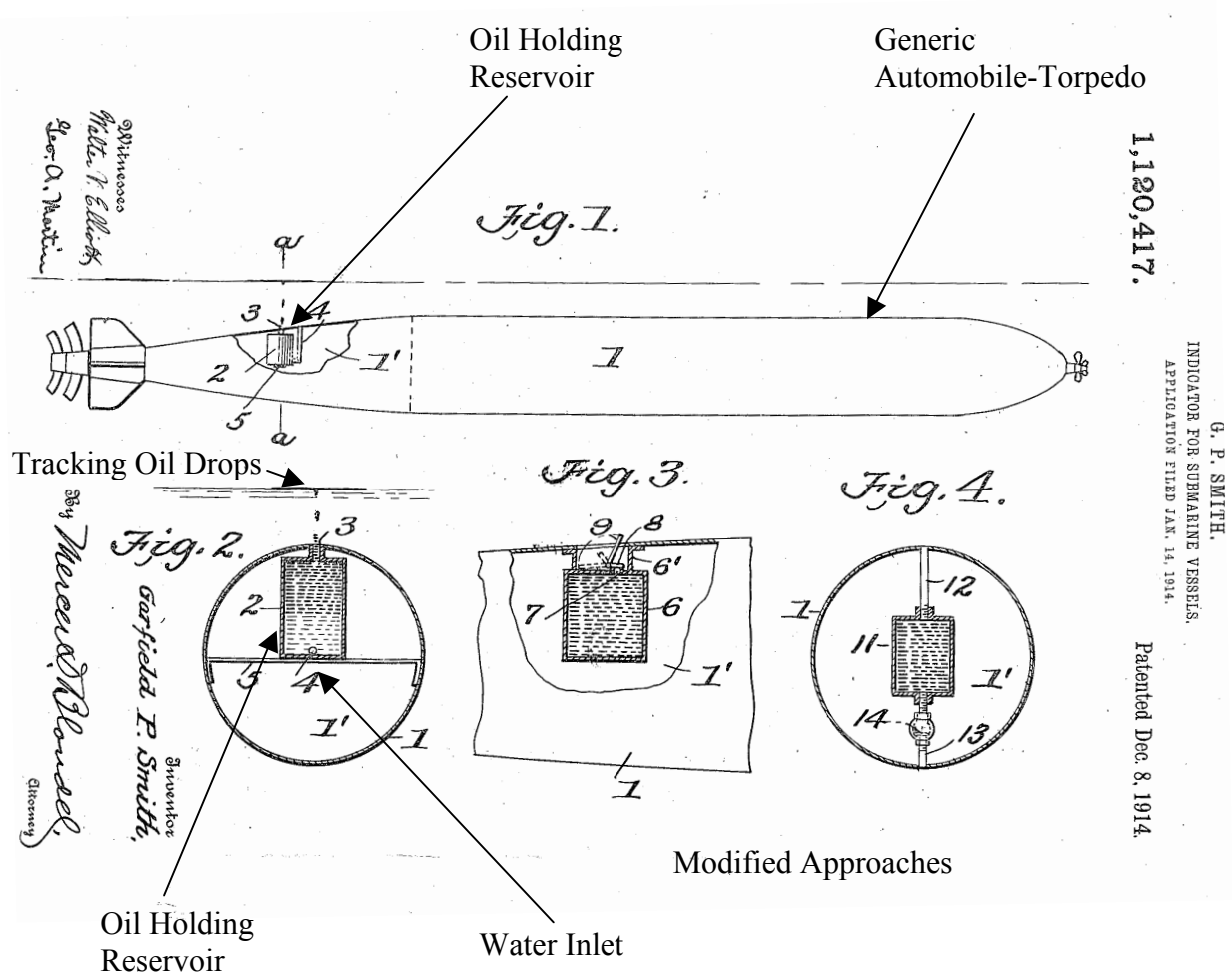

Pollution (or Oil Slick) Tracking		

1,120,417 G.P. Smith	Dec. 8, 1914	**Indicator For Submarine Vessels**

Even though this looks like a conventional torpedo, it incorporates a most unconventional feature – an Oil Slick Tracking device. This approach to finding position locations and tracking the vehicle's course would definitely not work in today's environmentally conscious environment.

In this oil-spill scheme, an oil can is installed in the upper part of the hull and vented by a small opening to the outside of the hull. A small tube is also shown to allow seawater to enter the oil holding reservoir to compensate for the oil dripped out (or dripped up in this case). Various schemes are presented to uncover the oil hole upon launch, by making use of the flow of water past the opening. Once the hole is open it remains open even after the torpedo has shut down at end-of-run to allow the torpedo to be recovered, if it is an exercise torpedo being tested.

The inventor offers this as a navigation scheme for nearly all submerged vehicles, submarines, exercise ("dummy") torpedoes, or the "automobile torpedo." Submarines could make use of this tracking aid during "submerged trial runs" or when operating with the fleet. Other important uses advocated by the inventor include tracking mid-depth floaters that drift just below the surface, or locating a vehicle's "final resting place beneath the water" when "they embed their nose into the bottom into which they stick." The most interesting use suggested by the inventor is during heavy weather for the "…additional purpose of spreading oil upon the troubled waters to smooth the surface…"

It's doubtful the inventor could do this kind of thinking today.

Patent # Inventor	Date Granted	Title
1,133,282 G.P. Helfrich	Mar. 30, 1915	**Torpedo**

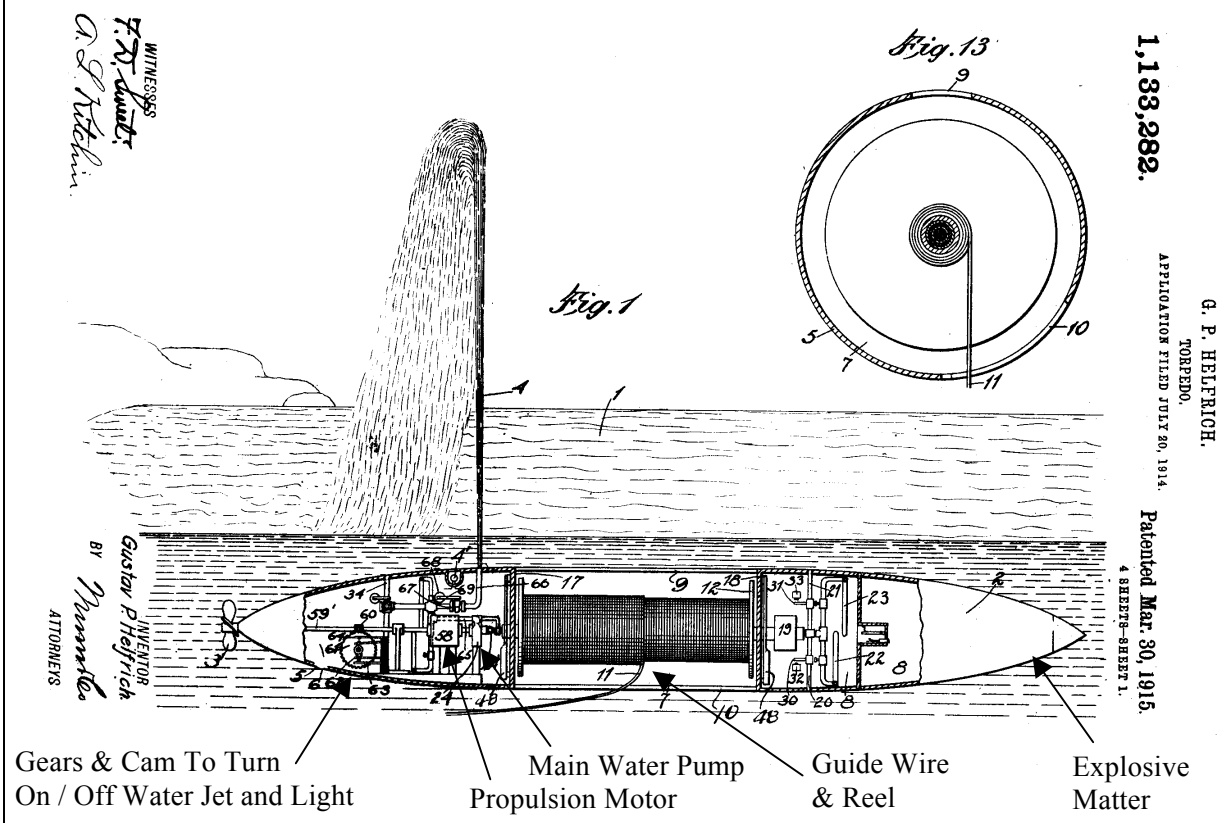

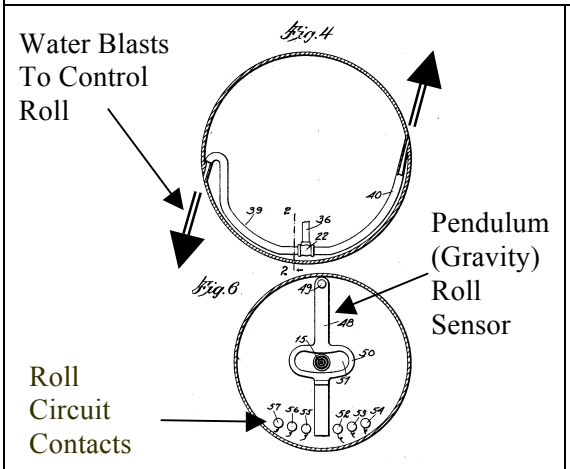

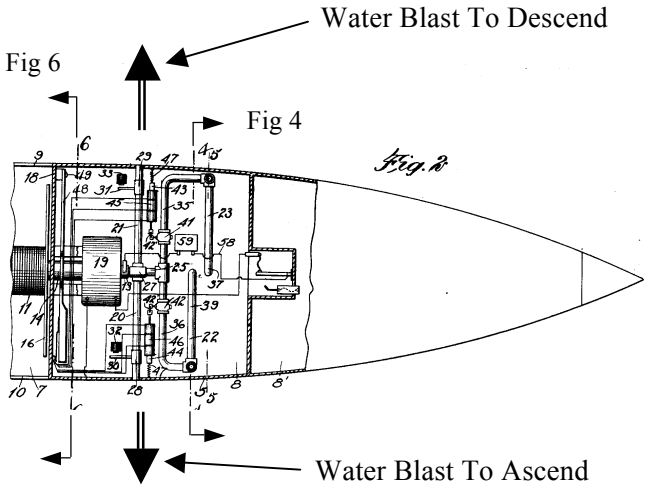

One More Attempt At Geyser Tracking

1,133,282 G.P. Helfrich	Mar. 30, 1915	**Torpedo**

Is the third time a charm for the geyser guidance inventor? This is a very similar invention to his idea behind Patent No. 1,117,843 of Nov. 17, 1914, with a couple of notable changes, mainly having to do with a new automatic depth and roll control mechanism. With this new degree of automation, the operator on shore only controls steering and the ignition of the warhead fuze through a guide and power wire (although this cable has an odd square cross section).

The major change, from his previous patent concerning automatic depth control, is a new water piping and valve compartment placed forward of the cable reel, where the valves receive water from a pipe running through the center of the cable reel axle. With this arrangement water for depth control can be blasted vertically from near the bow, as well as from close to the stern as described in the previous patent. Both bow and stern compartments have independent depth gauges to open and close these water valves in an effort to adjust vertical motion. But, since this is a case of the bow valves not knowing what the stern valves are doing, each side is off doing its own thing. How stable is that?

Another change is the manner of roll control; again this is accomplished through a series of water valves and piping. These additional pipes bend around the inside of the hull and blast water nearly tangentially to retard any tendency to roll. More automation is provided here by having the roll controlled by "a gravity actuated switch mechanism" (a pendulum). Again two similar but independently operated roll systems are provided (one in the forward compartment and one aft).

This craft would need careful in-water trimming before launch to make it neutrally buoyant and stable in roll or it will waste a lot of energy in trying to reach the proper depth and stop itself from constantly rolling back and forth. This type of non-feedback control system will result in the device never settling into a stable state, but will always "hunt" up and down between the two limits of roll and depth. However, for an <u>unmanned</u> craft this may be OK.

A somewhat simpler variable resistance rheostat controls the remaining functions and the water pipe steering concept is the same. Plus, the same upward facing light and geyser guidance system is provided except that now they operate intermittently (at alternate times). And again the light is expected to travel up through the water to the surface. For some unknown reason the inventor has the light and geyser operating at different times so the light cannot illuminate the geyser.

Patent # Inventor	Date Granted	Title
1,212,468 A. Extrand	Jan. 16, 1917	**Torpedo**

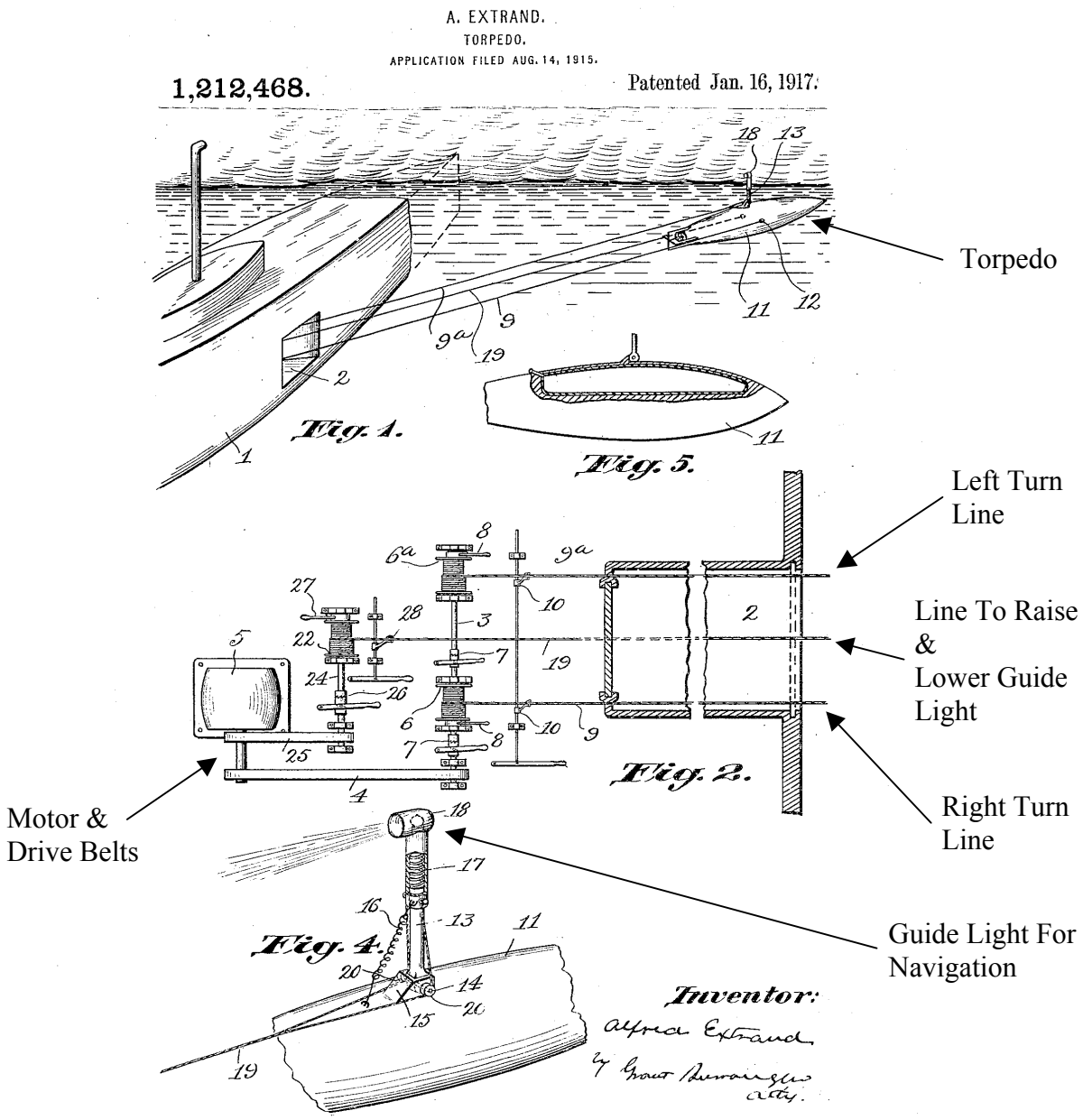

The Reins Of Control

1,212,468 A. Extrand	Jan. 16, 1917	**Torpedo**

Described here is a rope or reins controlled automobile torpedo, a rather simple attempt to produce a torpedo that can be steered. With a line tied to each side of the torpedo the operator just applies some drag to one of the lines and the torpedo swings around in that direction. Since the cable reels are stored in the launching vehicle the torpedo must haul around these ropes as it maneuvers toward the target. However, too much maneuvering like this will drag the vehicle to a halt. Also, since precision decreases with range, steering is at its worst when accuracy is needed most – during terminal homing.

A third line is strung out to control the height of a telescoping "standard" with a hooded, aft facing, light on top. Increasing the tension of this line lowers the light under water. Letting it have some slack raises the sighting light for a quick look at the torpedo's progress toward the target. "Letting it have some slack" also lets if foul (three lines in the water is a crowd).

Vehicle storage and launching are from a recessed lockout chamber along the side of the launching vessel through which the three lines run from their inboard reels. It would be real hard to get this one and its attendant cables launched out of a torpedo tube. The torpedo can be retrieved by winding in these three lines, if it misses the target.

By the time this patent was granted World War I was well underway, with the torpedo taking center stage in the first major war under the sea, yet were we this desperate to find a solution to the steering control problem of our torpedoes? What was he thinking?

Patent # Inventor	Date Granted	Title
1,228,892 A.E. Ericson	June 5, 1917	**Radio-Controlled Torpedo**

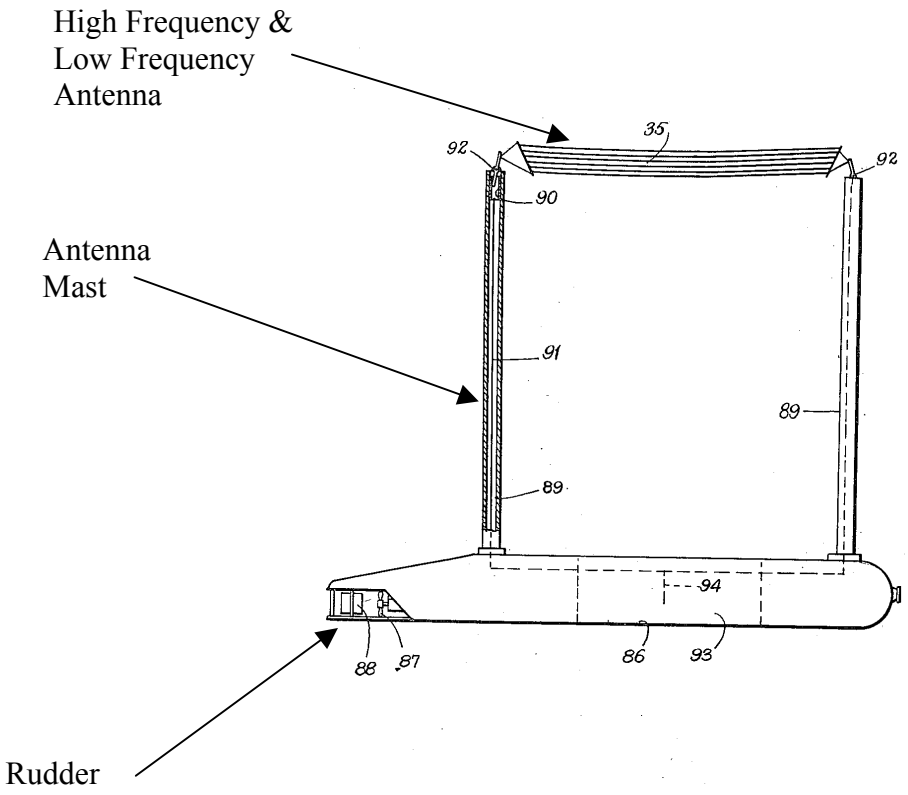

"Car 54, Where Are You?"

1,228,892 A.E. Ericson	June 5, 1917	**Radio-Controlled Torpedo**

With the advent of the wireless telegraph and the radio, some inventors began thinking of ways to use radio frequency (RF) signals to control torpedoes. If the torpedoes can have sighting vanes and lights sticking up out of them, then it should be possible to put on board an RF antenna or two, which is the intent behind this patent. Here the inventor only wants to control the steering of the torpedo and only addresses that aspect of torpedo design. Like most of the torpedoes discussed in this work the vehicle must travel close to the surface (so the antenna can be well above the surface of the sea).

The idea behind this scheme is to have two clocks operating synchronously, one in the torpedo and one at a remote control station. The clocks have only one hand, which revolves around the dial at one revolution per minute. At the end of each of these minute hands is an electrically conducting brush. As the brush sweeps around the dial it moves over a series of two different types of contact plates, spending 5 seconds moving over each contact. One contact is for left rudder commands, and the other is for right rudder commands.

At the remote operating site the output from these contact plates feed two RF transmitters (one of "high" frequency and the other of "low" frequency). Two different frequencies are transmitted to make the steering signals more countermeasure tolerant ("the design of a hostile ship to deflect the torpedo by itself sending out interfering waves is prevented").

At the torpedo the output from its contact plates drives the steering motor to swing the rudder.

When it is desired to turn the torpedo to the left the operator moves a joystick to the left and now only the left contacts are active. Each time the brush on the end of the minute hand sweeps over a left contact plate the RF transmitter at the remote control station is activated and for the next 5 seconds the two frequencies are transmitted out to the torpedo. No transmissions occur during the time the brush on the minute hand is sweeping over the right rudder contact plate. But, another 5 seconds of rudder movement occur when the brush moves over the next left rudder contact plate. In this way the rudder is moved in 5-second intervals. One might call this type of signal coding, time-interval coding.

The technology (mainly electrical) involved in this steering control system not only included DC batteries, and 110 Volt AC current sources, but also included things like a "spark gap RF transmitter" and a "coherer RF signal detector." Amazing what was accomplished 100 years ago with a bunch of resistors, capacitors, and inductors (relays) and this early level of analog radio technology.

Advantages:

No guide wire to drag around. No cable reel in the torpedo taking up space.

Capability to make fine rudder angle movements, for precise steering.

Disadvantages:

Must synchronize the two clocks before launch (launches from a torpedo tube may not be possible).

Difficult to hide or camouflage the two antenna towers projecting up from the torpedo.

Limited speed due to drag from the two radio antennas. And very low data rate.

Patent # Inventor	Date Granted	Title
1,250,178 C.F. Hover	Dec. 18, 1917	**Magnetically-Self-Controlled Torpedo**

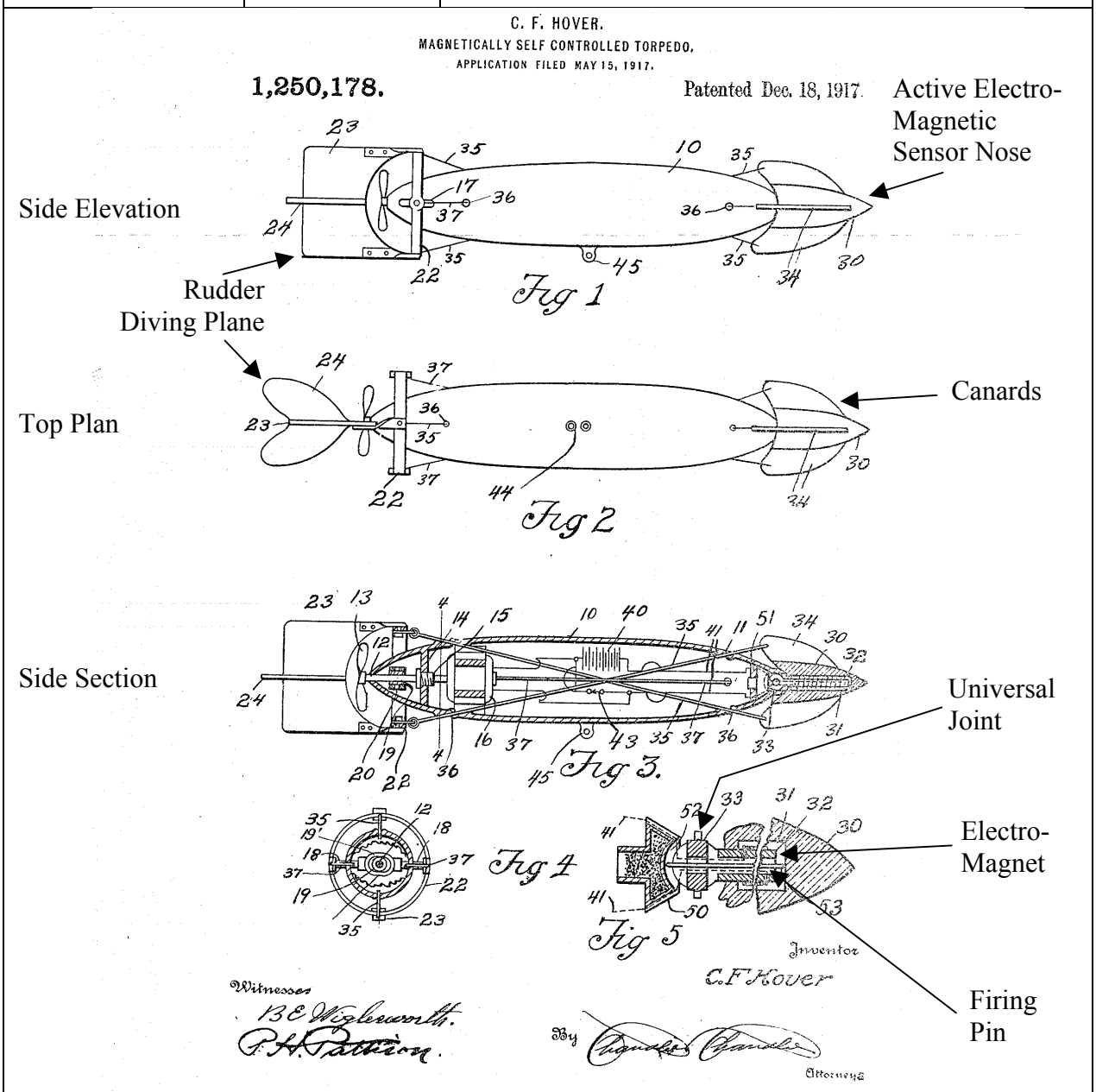

Magnetic Attraction

1,250,178 C.F. Hover	Dec. 18, 1917	**Magnetically-Self-Controlled Torpedo**

The interesting looking device presented in this patent is another attempt to use the target's magnetic field. It describes a magnetic guidance concept whereby a magnet in the noise of a torpedo is attracted to a ship's magnetic field, which affects the rudder to turn the torpedo in the direction of the target.

In the words of the inventor, once the torpedo has reached "a proximity sufficient to bring the objective within the field of force of the magnet" the electro-magnetic sensor in the nose pulls the torpedo into the target.

Both the nose and the tail (rudder and diving planes) are mounted on universal joints, so they can swing around in all directions. And they are mechanically connected together. As the nosepiece swings in a horizontal plane the rudder moves port or starboard. As the nosepiece swings vertically so do the diving planes to raise or lower the torpedo.

In other words, the universal joint in the nose drives the universal joint in the tail to steer the torpedo where the nose leads.

Canards, or fins in the nose, are offered as a way to improve the response of the nose to the magnetic field.

The watertight integrity of all these linkages passing through the hull is dismissed with a curt statement about "cables passing through suitable stuffing boxes."

The inventor claims that one of the uses for his device could be as a mine. Once tethered to the bottom the vehicle would be "automatically drawn" into contact with the target ship. In this mode it may not last very long as the battery would have to continuously operate the electro-magnet.

Air launched torpedoes are another use for this invention, and here the inventor evidently implies that his concept would work from a torpedo "dropped from a height."

He strains all credibility with his last statement: "A still further use to which such a construction is adaptable is hand grenades and bombs, the difference in construction being so slight as to not depart from the spirit of the invention."

Advantages:

With its ability to move vertically in the ocean this could have become an anti-submarine warfare (ASW) weapon. Was it inspired by the ongoing (WWI) events at sea? Would the immediate adoption of this patent (and its concept of a magnetic sensor) have had any impact on the war at sea or would it have to await the next such conflict?

Disadvantages:

There is no additional power source to assist the rudder or diving planes in overcoming the dynamic forces caused by the water flowing over these control surfaces. The force exerted on the nose sensor by the magnetic field from the distant target is supposed to be strong enough to push and pull the linkages to change these control surfaces. In reality, this force would probably be so slight at anything beyond a few feet from the hull as to be ineffective in causing the torpedo to home on the ship.

Patent # Inventor	Date Granted	Title
1,265,262 J.M. Seymour	May 7, 1918	**Torpedo**

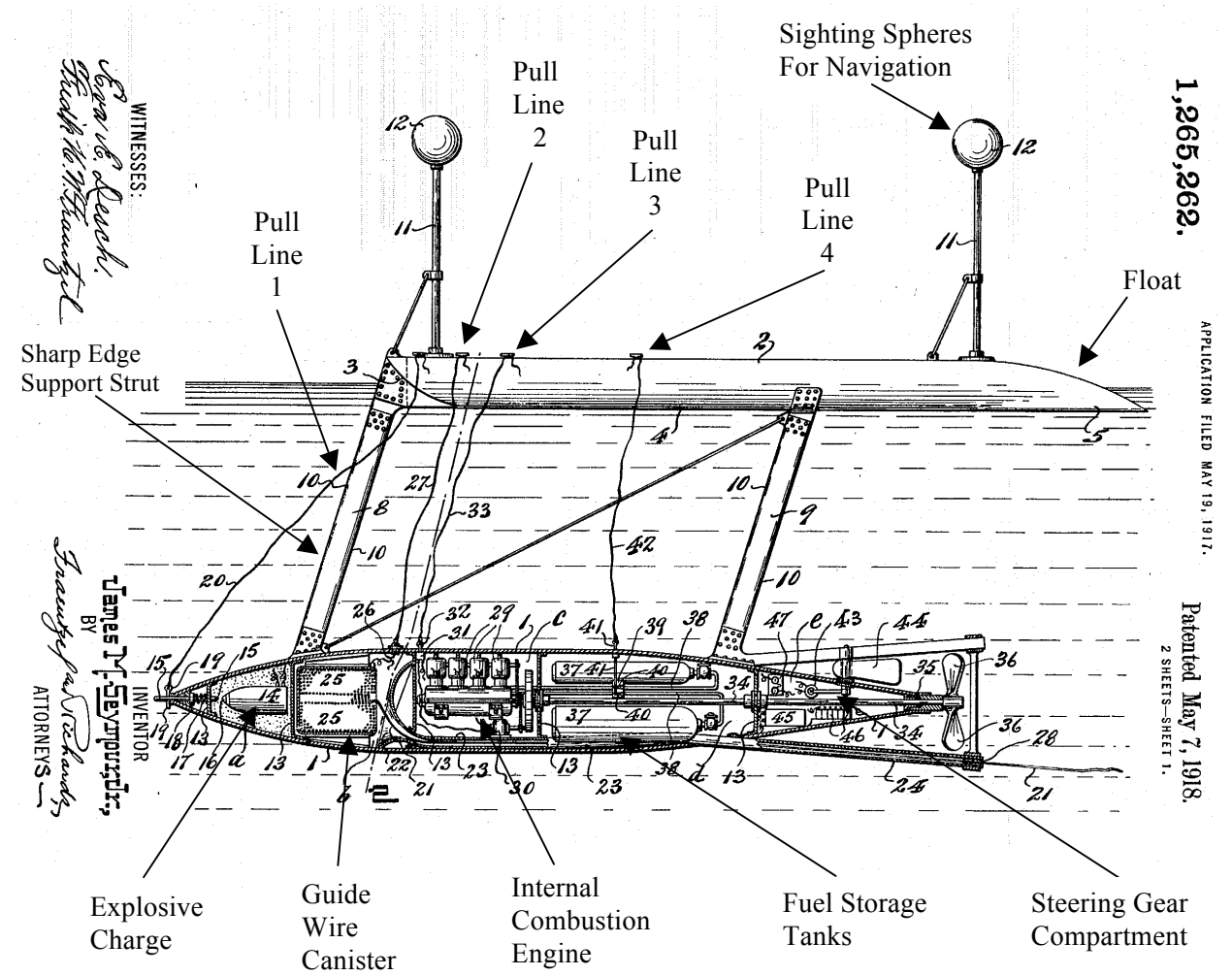

The Classic Pre-Torpedo

1,265,262 J.M. Seymour	May 7, 1918	**Torpedo**

Hopefully this is the last patent to offer a torpedo suspended from a surface float and containing guide marker rods, all in an attempt to provide an "Improvement in Torpedoes."

The very prolific inventor of this patent must have been reading other torpedo improvement patents, as there is a lot of similarity between all of them (even down to sharpening the leading edges of the support structures to cut through debris).

One unique feature is the modern approach used to pack and deploy the small, light guide wire (used to transmit steering and fuze actuation commands). The guide wire is stored on board and fed overboard through a tube emerging beneath the rudder and propeller. It is back twisted or coiled inside its container and payed out from the center, without the need for slip rings. An adhesive material (shellac) binds the wires together to prevent fouling upon uncoiling. This is how all modern guide wire canisters work. The canister compartment is flooded to admit seawater as the cable pays out.

One odd feature is the large number of lanyards that need to be pulled during launch: (1) pulls the safety-pin from the nose mounted impact firing-pin to arm the warhead, (2) unplugs the inlet on top of the wire canister compartment to admit seawater, (3) starts the engine's starter motor, and (4) opens the fuel line valves from the storage bottles to the engine.

And the engine is described as being an internal combustion engine burning a special hydrogen and oxygen fuel mixture, with the compressed oxygen and hydrogen fuel being stored in gas bottles in a separate compartment. Or the inventor offers a steam engine in place of the internal combustion engine (but again burning a mixture of hydrogen and oxygen). A range of 10 to 20 miles may be possible from this propulsion scheme.

This should be the last of a dying breed of suspended torpedoes, as the ongoing war at sea had recently entered the unrestricted submarine warfare stage with its nearly limitless expenditure of more mature torpedoes. The much desired steering capability had been replaced by good fire control (accurate aiming), and straight-running, high-speed torpedoes.

Patent # Inventor	Date Granted	Title
1,275,482 J.M. Seymour	Aug. 13, 1918	**Torpedo**

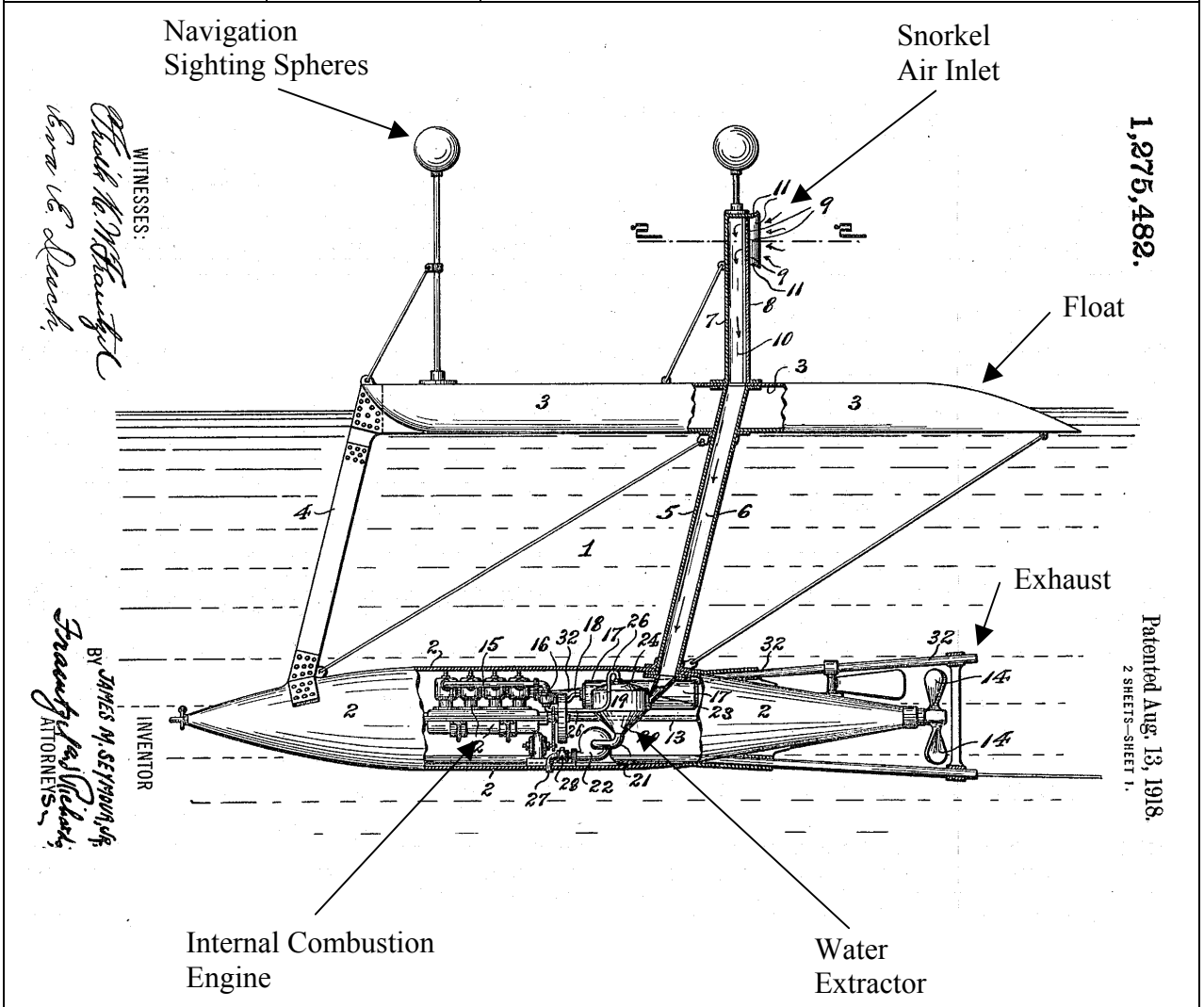

The Torpedo With The Snorkel

1,275,482 J.M. Seymour	Aug. 13, 1918	**Torpedo**
This patent applies to the same type of "submerged dirigible torpedo" as disclosed in Patent No. 1,265,262 of May 7, 1918, except the inventor changes the air supply. This is the first, and only, reference found to the use of a snorkel on a torpedo. And it is needed for the "propelling hydrocarbon engine." This patent and the inventor's previous one are the only two patents found where the inventor suggests using a "gasolene (sic) internal combustion engine" in a torpedo. The "air supplying means" is the hollow aft support strut ("stern hanger member") with its "plurality of perforations" (air inlets) just under the aft navigation-sighting sphere. One important auxiliary piece of machinery is the water extractor mechanism used to separate out the water from the inlet air flowing to the engine's carburetor. The moist air swirls around inside this drum, which uses centrifugal force to remove the water, and gravity pulls the water drops to the outlet pump for discharge overboard. Engine exhaust is vented from the torpedo through a tube extending aft of the propeller. With this scheme the inventor offers a "comparatively cheap and powerful prime mover" for torpedo use. Throughout the discussion, no mention was made of the need to pull various lanyards in order to activate any of the functions described, as was the case in the inventor's previous patent.		

Patent # Inventor	Date Granted	Title
1,279,152 W.J. Peters	Sep. 17, 1918	**Torpedo**

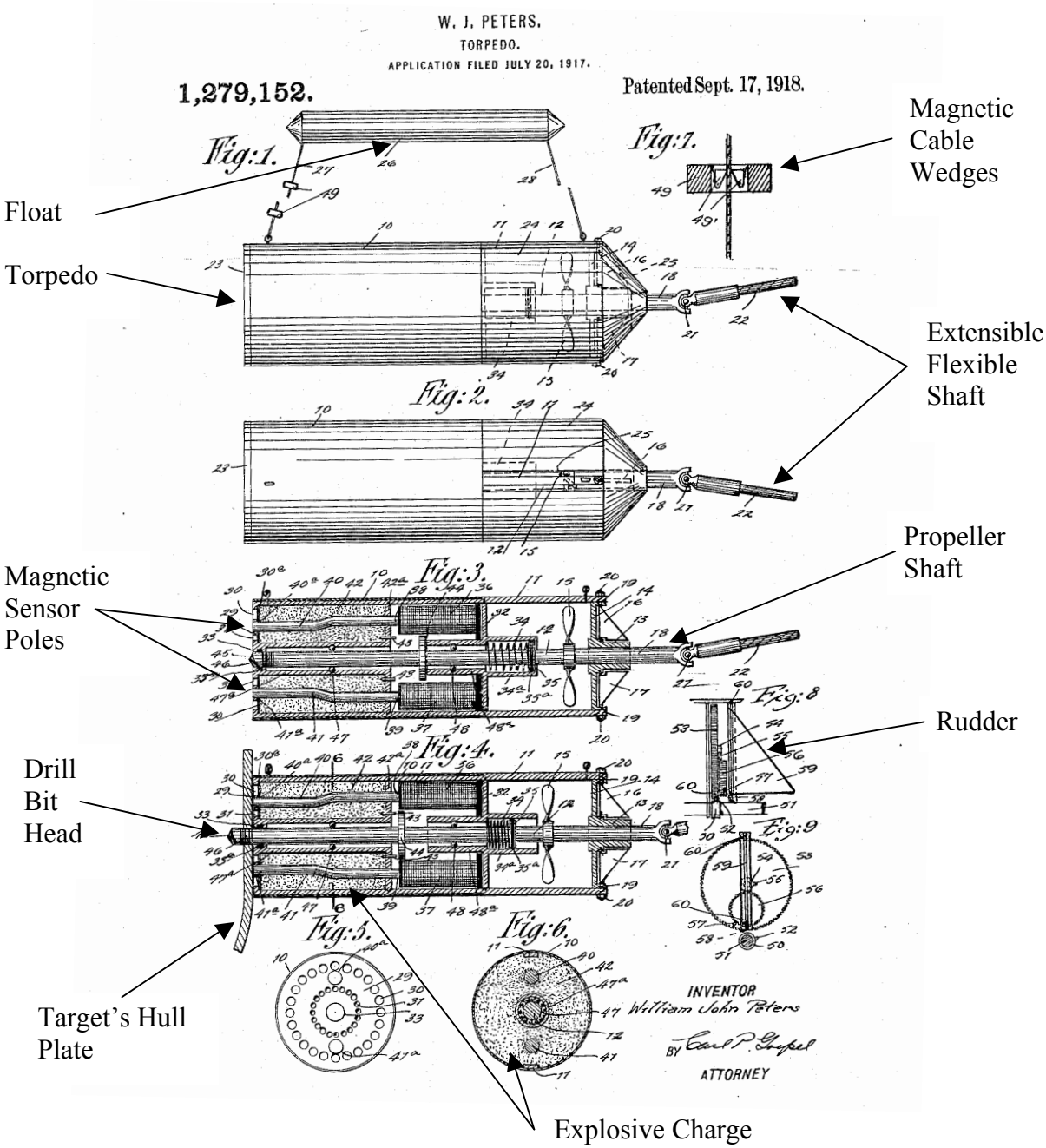

Winner of the "Thinking????" Award

1,279,152 W.J. Peters	Sep. 17, 1918	**Torpedo**

By the time this patent was granted World War I was winding down, but the war at sea was still in high gear, so it should come as no surprise that this inventor offers an Anti-Submarine Warfare (ASW) weapon in which a torpedo is to "hunt out" and attach itself to the hull of an enemy submarine.

Before launching, this torpedo is programmed to make circles in the path of the submarine then, through magnetic attraction, draw itself toward, and attach itself to, the target's hull, then explode. To define a circular course for this torpedo, the rudders are bolted to a specific rudder angle before launch. To provide propulsion, an extensible flexible shaft (running all the way back to the launching platform and rotated by a motor) turns the propeller. This is surely not wire guidance, but could instead be called plumber's snake propulsion!

The preferred deployment is through a torpedo tube, but it is stated that it can be shot from a cannon on a ship or dropped from an aircraft. However, the inventor seems to have forgotten about the flexible shaft (how does that work with cannons, or from an aircraft?). There's more. To maintain a constant depth this device also comes with a float and tether cable arrangement (also shot from the cannon?).

Even if the flexible shaft were extremely small and neutrally buoyant to allow this kind of trajectory, it is highly unlikely that a submarine would be at this exact depth and intercept the torpedo as the torpedo aimlessly wanders around in circles.

Retrieval is simply accomplished by reversing the drive motor at the controlling station.

Terminal homing is through an onboard magnet with the poles at the forward face of the torpedo, causing the lines of magnetic flux to be projected forward.

And, it gets better.

Since the propeller shaft, which extends all the way through the torpedo, is driven by a motor on the surface while the torpedo is underway, why not let it do useful work when in contact with the target's hull? To this end a drill bit head is mounted on the extreme forward end of the shaft. Upon contact with the hull, the motor continues to turn the propeller and the "drill head bores into the steel side of the submarine." Continued drilling is necessary to permit the shaft to move forward enough to touch the percussion cap and detonate the explosive charge. Hey, I can't make up this stuff!

Here's the best part.

It's for the case where the torpedo is operating slightly below the target. How do you force the torpedo up toward the hull should the forward float line snag the submarine's hull? This is accomplished by stringing magnets along the line. The magnets are attached to the line with the mechanical equivalent of a check valve, so the cable can only slide through the magnets in one direction. Once several of these magnets attach themselves to the hull, the only way the cable can move is such that the torpedo is dragged upward toward the hull. Normal vibrations and the movements during the encounter are supposed to cause the cable to work its way up through the magnets. At some point the torpedo's own magnetic sensor will take over and force the nose of the torpedo up against the hull.

What was this guy thinking? How embarrassing it would be to be sunk by such a device. It's understandable why no witnesses signed this patent.

Patent # Inventor	Date Granted	Title
1,292,668 I.A. Weaver	Jan. 28, 1919	**Torpedo**

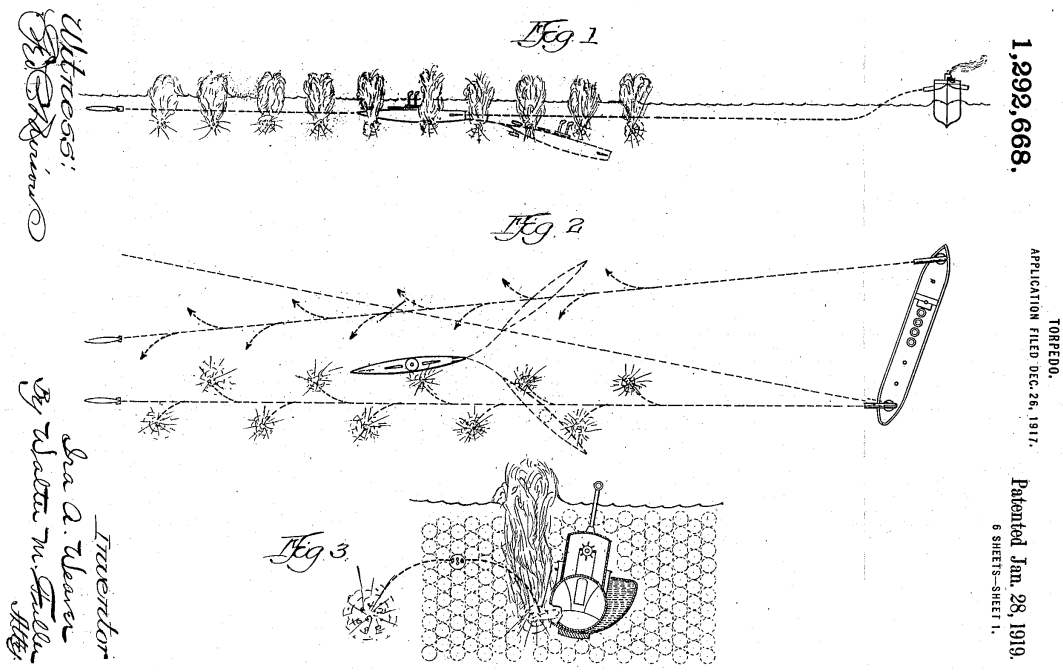

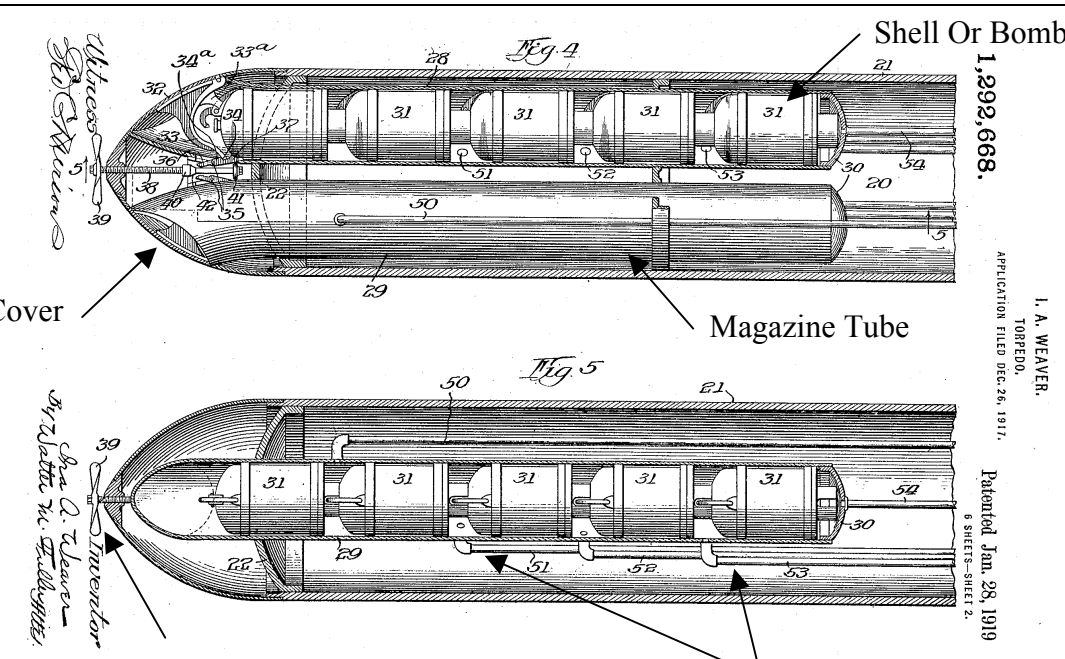

1,292,668 I.A. Weaver	Jan. 28, 1919	**Torpedo**

Here is another predominately ASW device, but one that, at least, looks like a torpedo. It is in this pre-torpedo category because it is not a conventional torpedo; this torpedo has *torpedo tubes*. It is designed to fire out groups of "shells or bombs" or in today's terminology, cluster munitions. With this device the inventor wanted to increase the "effectiveness" and "area of operation" of torpedoes. Firing two of these torpedoes, one on each side of the position of the suspected target submarine, would provide the best chances for success.

Two magazine tubes for the shells are shown in the bow of the carrier torpedo, with five sub-munitions each. The inventor is showing these two tubes within the main compressed air storage tank, whose air drives both the propulsion turbine and the means to discharge the shells.

The spinning of a small propeller in the nose, immediately after launch, unlocks the two cover plates over each magazine tube. But water pressure keeps them closed until the first shell is released.

A mechanical timer and gear assembly controls the time between torpedo launch and the discharge of the first shell. At this proper time, set by the launching crew on the firing craft, a rotating "distributing-valve" begins to cycle through the 10 positions admitting compressed air behind each shell and ejecting each one from the magazine tubes. The shells explode just a few seconds after leaving the host torpedo, as determined by the action of the slow-burning powder in their detonators.

Advantages:

At the end-of-run, after discharging all its shells, the torpedo will come to the surface and can be recovered, recharged with air, have its magazine replenished with shells, and be set out again on another mission of destruction. Other (presumably Whitehead-derivative) torpedoes are very dangerous to handle at the end of their run if they fail to hit and explode at their target.

If, however, this "improved magazine torpedo" impacts the target, all the remaining shells detonate at once, destroying both the torpedo and target.

Patent # Inventor	Date Granted	Title
1,312,510 G. Baker	Aug. 12, 1919	**Sound Controlled Dirigible Torpedo**

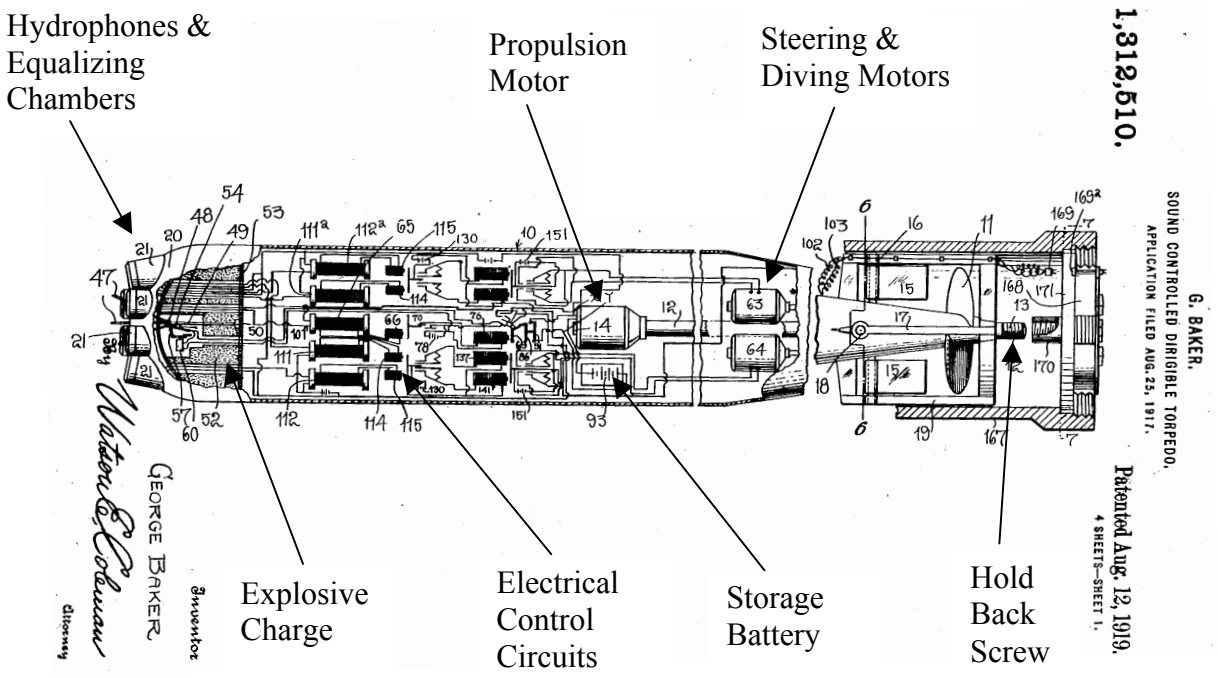

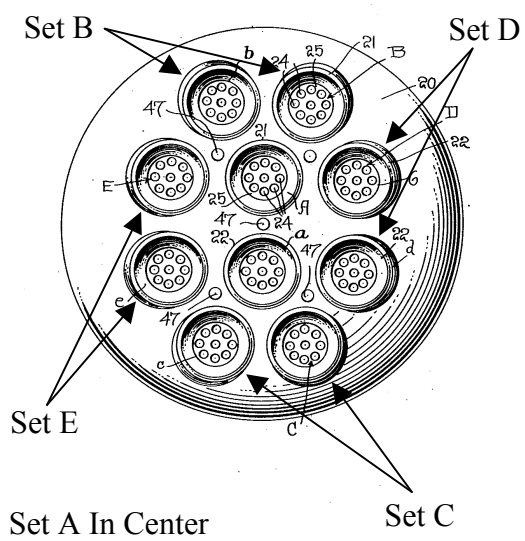

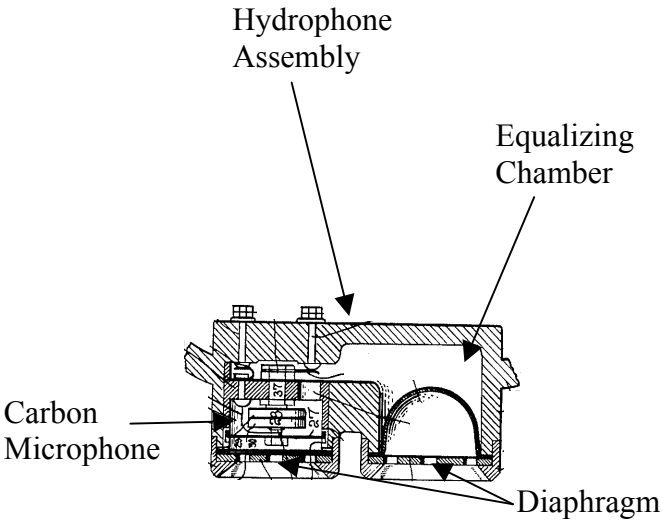

FIDO Wasn't First

1,312,510 G. Baker	Aug. 12, 1919	**Sound Controlled Dirigible Torpedo**

The U.S. Navy's first passive acoustic homing torpedo hit the water in World War II. To confuse everyone, including its users, it was called a mine, the Mark 24 Mine, and nicknamed FIDO. But this work is not about torpedo hardware; it's about torpedo patents, and the earlier the better. And here's a patent for a passive acoustic homing torpedo that had its origins in World War I.

Developing FIDO wasn't the first time thought was given toward steering a torpedo by the sound waves emitted by the target. And the usual target in this case was a submarine. A passive acoustic homing ASW torpedo seeks out noise from a target submarine's propulsion system, pumps, and other machinery. This patent is included in the pre-torpedo category because it is very novel and somewhat ahead of its time, even though it lacks some of the pre-torpedo features.

As shown in the drawing, there are five hydrophones in the nose (one to activate and launch the torpedo, two for vertical control, and two for steering). The transducing element, which converts acoustic pressure waves into electricity, in each hydrophone is called a Carbon Microphone. The active ingredient in each microphone is a pile of carbon granules, which have the unique property of changing their resistance to electricity when squeezed or vibrated. The acoustic sensor is just two cups facing each other and filled with these carbon granules. The incoming sound wave, acting on a sound receiving "diaphragm," squeezes and relaxes the bottoms of these cups (forcing the carbon granules into greater or lesser "contiguity") and as a result changes the current flowing through them. This small current change is used to control steering and diving motors.

To account for the ten elements shown on the nose, each hydrophone is associated with an "equalizing chamber" that is designed to filter out the low frequency ocean noise, and the dynamic action of the water flowing over the nose while the torpedo is underway. However, the inventor strays from good science by suggesting the use of air as the equalizing agent.

The frequency of the sound waves that this system responds to is described only as having "relatively high rapidity." This causes the microphone to vibrate with "great rapidity" reducing the resistance in the carbon granules in the microphone and permits a "greater amount of current" to pass through the microphones. The resulting amount of rudder or diving plane movement depends on the amplitude level of the vibrating signal received at the two sets of hydrophones. No beamforming here, just crude measurements of signal strengths.

Advantages: Automatic operation to an unprecedented degree. It has the capability to arm and launch itself when the amplitude of the incoming sound waves crosses over a set threshold. All the operator need do is enter the range at which targets are expected to appear. The system will do the rest; stand back!

The steering motor is controlled in two stages, fast or slow, depending upon the signal strengths received at the two (left and right) hydrophones.

One of the additional uses, as stated by the inventor, is as an anti-torpedo torpedo. He was ahead of his time.

Disadvantages: If the system response is rapid enough and follows the incoming waveform exactly, wouldn't the rudder just flutter?

A constant amount of current always needs to pass through the microphones, even while in the torpedo tube, to keep the activate-and-go circuit operating.

The concept relies on discriminating between small differences in the signal strength from two hydrophones spaced relatively close together, but pointed in slightly different directions. Since acoustic attenuation isn't much over a foot of distance, this would have been a very difficult measurement to make.

Patent # Inventor	Date Granted	Title
1,313,100 N. Longoria	Aug. 12, 1919	**Torpedo-Controlling Apparatus**

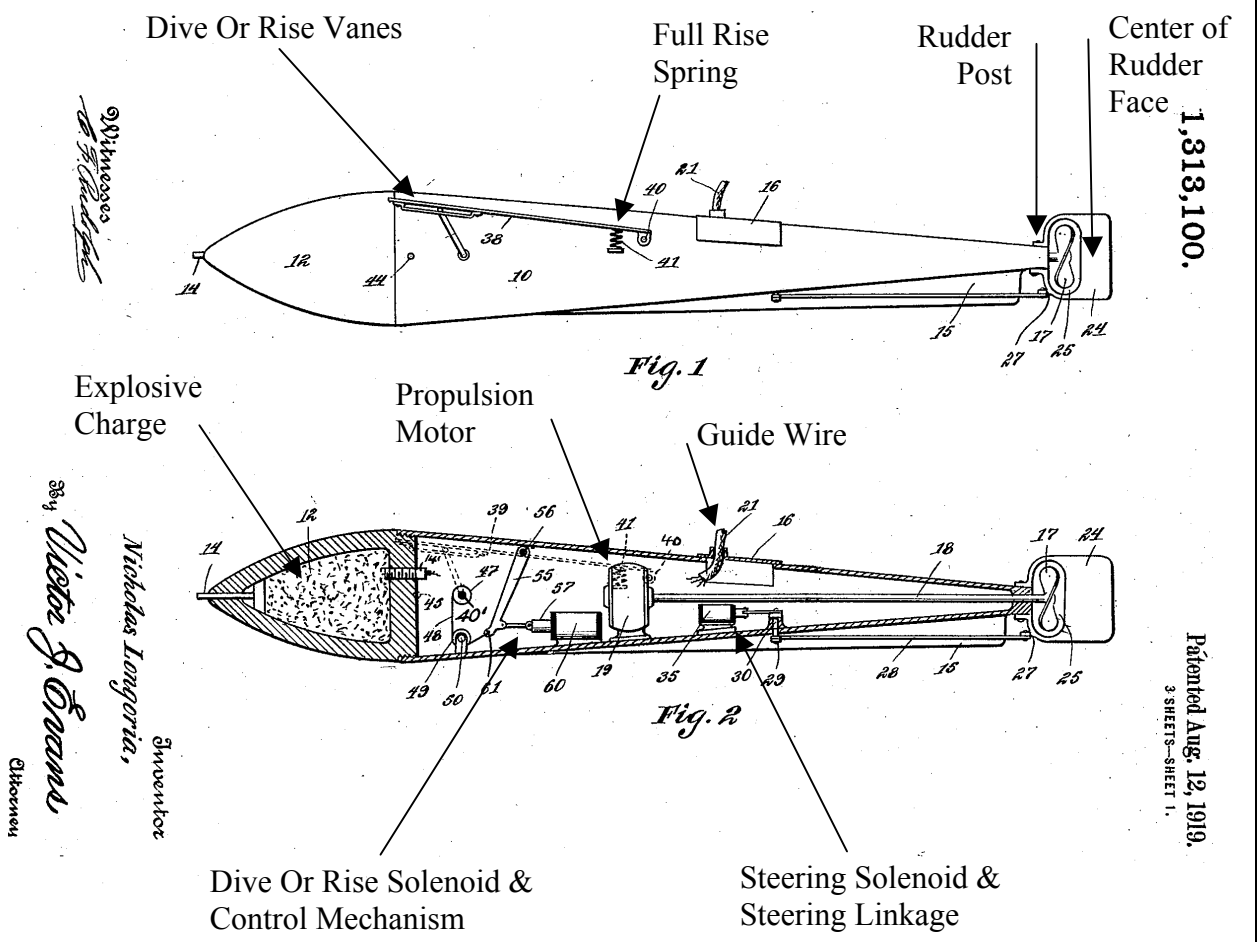

1,313,100 N. Longoria	Aug. 12, 1919	**Torpedo-Controlling Apparatus**

Here is a patent representing some incomplete thinking. The subject of this post-World War I patent is a control mechanism for an aircraft-deployed ASW torpedo. It is doubtful the inventor thought this one through, considering all of the items he wants to carry in the aircraft.

Depth control comes from two moveable wings or vanes, one mounted on each side of the torpedo near the bow. The forward end of the vanes (under the action of an electric solenoid) tilt up to force the torpedo to climb or tilt down to make the torpedo dive. Springs keep the vanes in the full rise position until the solenoid acts to tilt them down. Course control is by the usual rudder located aft of the propeller (with the rudder post oddly placed forward of the propeller). Electrically operated solenoids drive these devices.

The guide wire is a multi-conductor cable, with one conductor for each function (plus a ground). Through this wire is transmitted the power to operate the propulsion motor, signals to operate the control solenoids, and a command to ignite the explosive charge.

The cable is wound on a reel with a slip ring assembly on one end of the cable reel to transmit the power and signals from the control station onto the cable. Winding in the cable retrieves the torpedo should it miss its target.

So far this doesn't seem too difficult to visualize, but it really stretches credibility when the inventor puts the cable reel in the aircraft! In addition to this reel, the control station and energy supply must also be carried onboard the aircraft. How is it possible to deploy and launch a torpedo, and pay out its cable, all from a rickety old WWI-era biplane?

The quantity of cable capable of being carried aboard a biplane of that era, and payed out swiftly enough to allow the torpedo free movement underwater, would surely make for a rather limited operational time period. That's another way of saying it wouldn't be worth it.

Disadvantages:

This concept assumes that the aircraft of that time period are able to support the weight of the cable reel, power supply, and remote control station, plus, the aircraft is to carry and launch the torpedo!

Rudder forces would be excessive, as designed, due to the rudder's axis of rotation (rudder post) being in front of the propeller, some distance from the face of the rudder. This configuration would produce large forces on the rudder face (requiring the rudder post to develop a large torque to overcome the dynamic forces of the water on the rudder face), compared with rudders where the rudder post is within the body of the rudder.

There is a small spring shown external to the hull that is expected to reposition the vanes or wings when their driving solenoid is deenergized. However, it would take a powerful spring to overpower the forces generated by the seawater flowing over the wings when the torpedo is descending in order to rotate them to the full-rise position.

Patent # Inventor	Date Granted	Title
1,348,152 F. Conlin	Aug. 3, 1920	**Marine Torpedo**

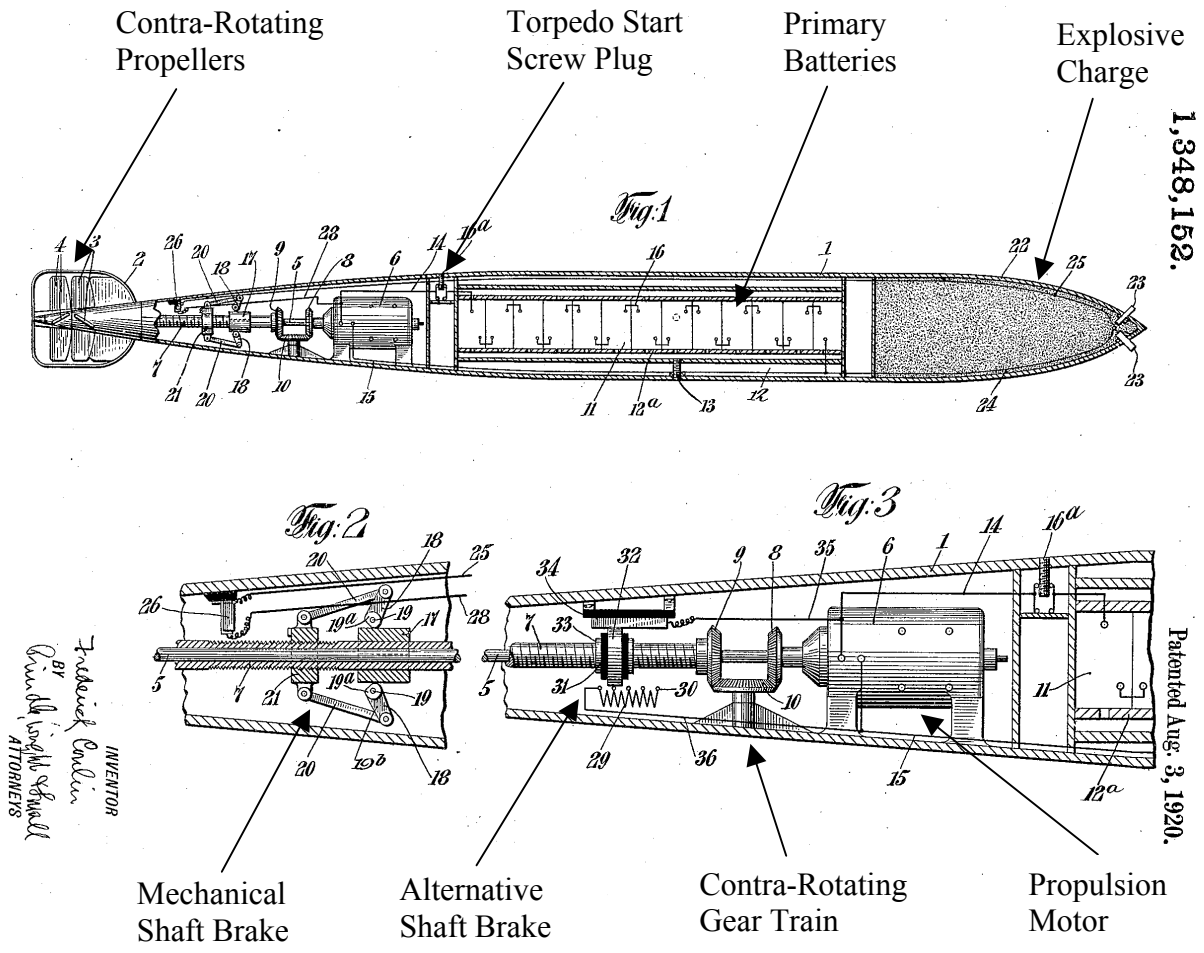

When I Grow Up I Want To Be A Mark 18 Torpedo

1,348,152 F. Conlin	Aug. 3, 1920	**Marine Torpedo**

The inventor offers this idea as an improvement to the expensive, complex, and heavy Whitehead torpedo. His lower cost alternative, "free from the extreme complexity," is the first patent found describing a fairly mature battery-powered torpedo. The U.S. Navy's first battery-powered torpedo, the Mark 18 Torpedo, became a hardware reality almost a quarter of a century later. Again this is an example of an inventor being slightly ahead of his time.

The inventor prefers to use a primary, or one-time-only, battery rather than a secondary battery that can be recharged. He wants a battery that can "give out its current very rapidly." He also wants to store the electrolyte outside of the battery cells until just before launch, as was done on later torpedoes such as the warshot Mark 37 Torpedo.

One modern feature is the contra-rotating propellers and associated beveled gear train mechanism coming off the motor shaft.

One novel, or odd, feature is the mechanical shaft brake designed to keep the propellers from "racing" after startup and before water entry. Apparently the shafts are squeezed together to slow them down. This brake is automatically released after a brief period of time.

As soon as a Start Screw Plug is inserted, a circuit is complete through the electric motor and the propellers start to spin. They revolve at a slow speed initially, during the launch into the water, then they operate at full speed. There is no seawater-start switch, which would have eliminated the mechanical brake mechanism and the Start Screw Plug.

The explosive charge is activated when another electric circuit is completed upon impact. This may not be the most reliable approach because at the moment everything begins to break apart, it is time for this little circuit to do its thing.

Disadvantages:

Nowhere in the patent did the inventor address any means to control the operating depth or to provide for steering.

Patent # Inventor	Date Granted	Title
1,382,166 C. Blum	June 21, 1921	**Torpedo**

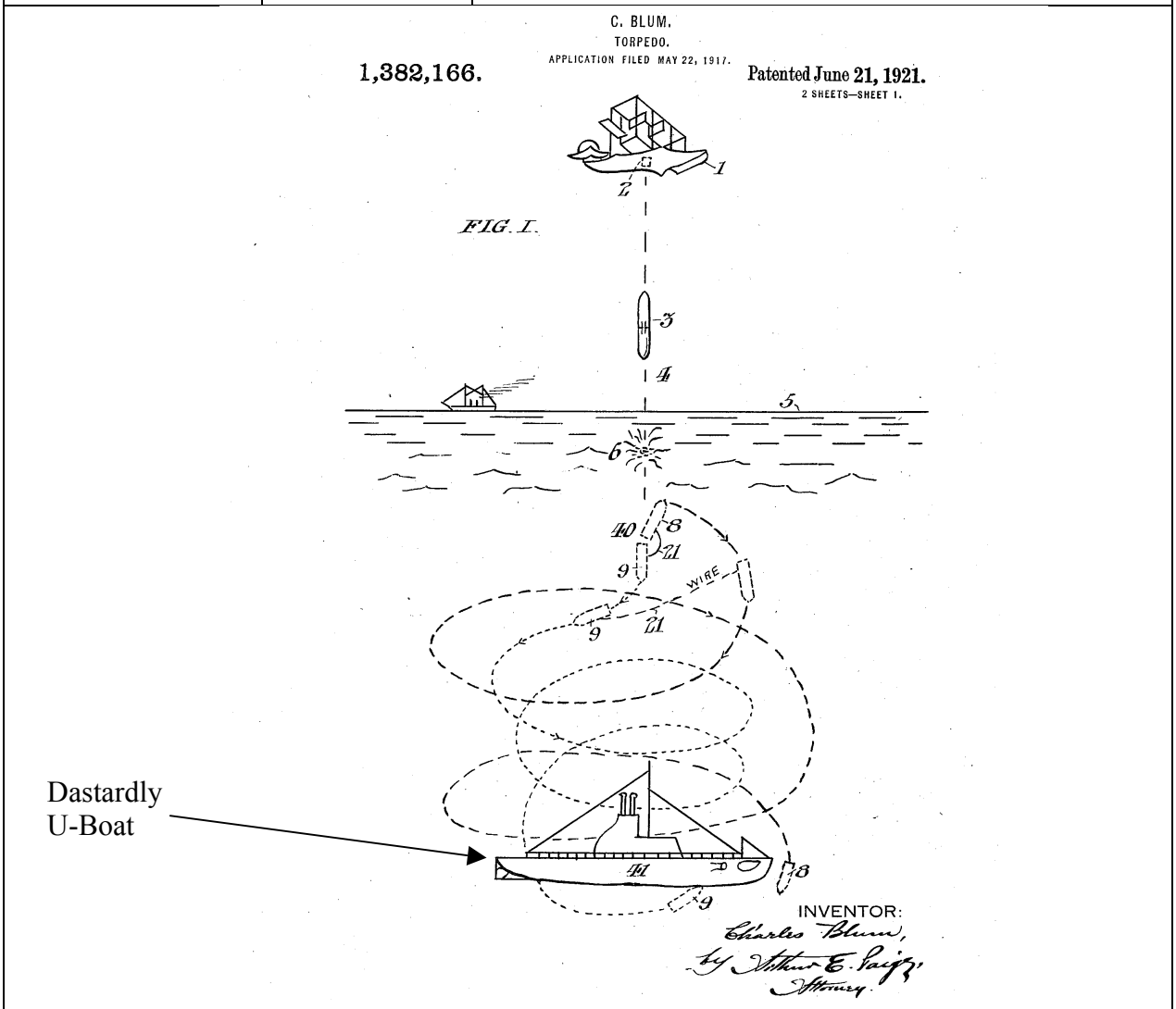

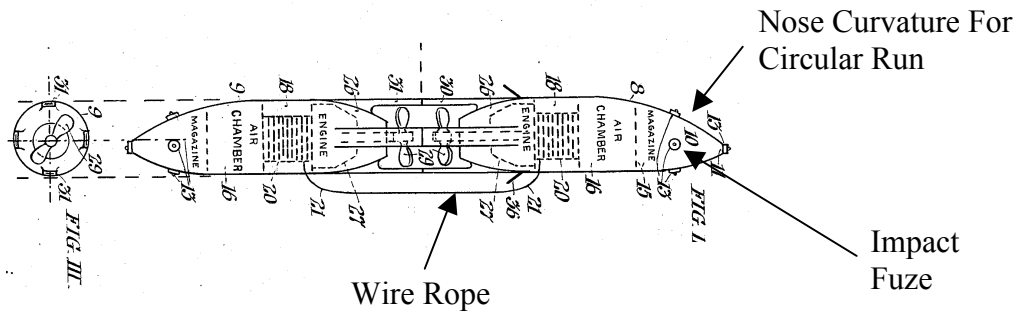

1,382,166 C. Blum	June 21, 1921	**Torpedo**

This patent describes an aircraft deployed ASW torpedo, which is dropped like a bomb over the suspected location of a submerged enemy submarine.

This device consists of two small self-propelled torpedoes mounted tail-to-tail and within each is a cable reel with a limited amount of wire rope stored on the reels.

The assembly is designed to separate into two sections upon impact with the water. Then, after the engines start up, each torpedo is to move off into descending circles of opposite directions until the line between them becomes taut. This is due to the unique design feature of their nose. The curvature of their noses causes them to initially assume a circular path without the need for any rudder control – and there is no rudder to control! Looking at the geometry again, it does not seem possible to make such circles in opposite directions (the line tension would relax as they passed each other and snap taut when on opposite sides of the circles). Think!

The proposed dual-vehicle search pattern would provide a relatively wide area of operation once in the water, limited only by the length of the wire rope between the two vehicles. But, this would only work if the geometry called for the vehicles to be 180º apart traveling in the same direction along a circle and at the exact same speed.

In this patent the pair of vehicles is to spiral down until the taut line between them snags on the hull of the target. The torpedoes continue to drive themselves forward, and wrap themselves around the hull, with the result that one or both will bang against the hull. This probably works like the South American Boleadoras (or two ball Bola).

The explosive charge can be set off by any one of four different methods: (1) upon impact with the target's hull, (2) at a predetermined pressure (depth), (3) after a predetermined time period, or (4) at the end of run (fuel exhaustion).

From the looks of the relatively small size of the explosive charge, the resulting explosion may, at a minimum, cause the submarine's captain to switch from torpedo fire control (offensive operations) to damage control (survival and escape operations).

Requiem for the Pre-Torpedo

THE TERM PRE-TORPEDO should not imply an "infernal machine," which was actually a mine. It should not be confused with a "spar torpedo" (as used in the Civil War), nor should it imply a post-Civil War "towed torpedo." By the time of the Pre-Torpedo Era these weapons had run their course and were just too dangerous to use anymore.

Pre-torpedoes generally were self-propelled and remotely controlled via cables or ropes, belonging to a class of torpedoes that somehow earned the name "dirigible." In 1889, LT. Charles Sleeman, R.N., provided this definition of the dirigible torpedo: "By dirigible torpedoes are meant those which are controlled only in respect to their lateral direction."

Pre-torpedoes were steered toward their targets, their explosive charges could be detonated from a remote site (or on contact), and they provided limited control over their engines. However, running depth was usually set by the launching crew before deployment.

These pre-torpedoes generally did not have contra-rotating propellers (with the notable exception of the inventions by John Lay), and they certainly did not have turbine propulsion, or gyro stabilization (with the exception of John Howell's flywheel with its gyroscopic action).

But, these "also ran" devices were contemporary with, and even a competitor to, The Whitehead. The Whitehead and Howell torpedoes were considered uncontrolled or unguided, straight runners. These uncontrolled fire-and-forget weapons were sometimes called "automobile" or "fish" torpedoes. They were supposed to run out in a straight line at a constant depth until fuel exhaustion and explode on contact (the predecessors of the torpedoes made famous in World War II).

The attraction of the pre-torpedo was its perceived ability to improve upon the Whitehead torpedo as the inventors promoted one or more features that they were sure would overcome or extend the capabilities of The Whitehead. Even as the Whitehead torpedo gained ever increasing acceptance, inventors poured out of the woodwork to offer improvements and gain a piece of the lucrative torpedo business. And the flood of applications to the U.S. Patent Office showed their zeal and the fact that this was a phenomenon unique to the United States, as other countries mainly adopted the Whitehead torpedo (although England also tried the Brennan controlled torpedo). All these pre-torpedo attempts were serious enough to have been granted patents.

So what happened to the pre-torpedo concepts? Considering all the different types of torpedoes presented in this work, was there any serious interest in developing this torpedo technology any further? There may have been a torpedo arms race during this period of time but it didn't seem to include the pre-torpedo. Since most of the pre-torpedoes fall into the dirigible class, let's turn the question toward the fate of the dirigible torpedo for an answer.

In general the dirigible torpedo received limited testing and scant use on a worldwide scale, and the Navy's Bureau of Ordnance never deployed them on any U.S. Navy warship. Some of the problems facing the deployment of the dirigible torpedo by a U.S. Navy ship, which were never resolved, included:

- Early on the fleet was already using the Howell torpedo and The Whitehead was coming along (due to the Bliss – Leavitt venture).

- The guide wires on dirigible torpedoes could be fouled in the ship's screws or within themselves (two wires deployed over the side of a ship will invariably entangle).

- The launching ship is much harder to control with these lines in the water. Ship control and maneuverability are critical during combat and should not be impeded when torpedoes are to be used. Added to this would be the need to continuously track both target and weapon to ensure their interception.

- The guide wires could break as the tensile load in the wires increases due to the dynamics of launching a torpedo while underway.

- Even though some testing had occurred, there was no advocate for them within the torpedo community, there was no support system, and none of these pre-torpedoes were developed to the system level.

- Technology was outstripping the inventor's enthusiasm. The torpedoes in the fleet were getting to be too "high tech" as World War I approached to attract the attention of the non-professional. Technologies like turbine propulsion, gyroscopic steering control, and depth sensing and depth control were appearing.

- The application had shifted away from coastal defense, away from the need to steer a torpedo in high tidal-current areas, and the use of torpedoes against moored or anchored ships had diminished. Harbor defense was an Army problem; let them deal with the use of dirigible torpedoes in the coastal areas. The Navy was shifting gears toward using torpedoes to sink surface ships underway at sea where uncontrolled, straight-running torpedoes would work just fine.

- The statement by Major Ellery, Head of the Evaluation Board, Victoria, Australia, on October 30, 1891 didn't help either. He commented, "At present it seems generally to be recognized … that a controlled torpedo is undesirable on board ship."

Conclusion

WHAT WERE THESE PEOPLE THINKING? Let's not think backwards from today's sleek mono-hulled torpedo, but think forward from Cushing's Civil War spar torpedo, a device that actually saw service. What may have seemed possible to this group of inventors over 100 years ago, now seems absurd and even humorous. While we are not trying to make fun of these inventions, some are just so rich in humor we must recognize their contribution, even if their efforts led to a dead end.

All the ideas presented here, and some are rather wild by today's standards, resulted in actual patents being granted by the U.S. Patent and Trademark Office. Most relate to the pre-torpedo theme as outlined at the beginning of this work. However, some of these patents do not exactly follow the pre-torpedo script, but were just too good to pass up or showed ideas that were ahead of their time. In all 54 patents make up this study out of over 100 found relating to torpedoes of the 19th and early 20th Centuries.

This is not a complete list of all the patents on torpedoes during this time period, as so many of the patents were on the road toward the development of Whitehead-class torpedoes and its follow-on variants.

It might be helpful to add a word about "refrigeration" as it was often used regarding the old compressed gas engines. The gas was compressed, not refrigerated, for storage in the reservoir. This term is used to refer to the rapid cooling of the compressed gas upon expansion from its storage reservoir just prior to entering the engine. The gas would cool to a temperature much lower than seawater and as it expanded and traveled through the valves and piping it would freeze these components. Seawater was initially used to "warm" the gas to some temperature above its freezing temperature, but still below the temperature of seawater, and thus prevent freezing. Later a real "heater" did a better job and heated the gas to a temperature well above the temperature of seawater. This heated gas, with its increased energy content, drove the torpedo farther and/or faster.

Another term that needs explanation concerns the torpedo with the magnetic head. It is not a magnetic influence exploder like the infamous Mark 6 Magnetic Influence Exploder on the World War II Mark 14 Torpedo. This is a sensor for guidance whereby the ship's steel hull attracts the torpedo toward it. Detonation is most often on impact by the standard percussion fuze.

One common thread through many of these dirigible-torpedo patents is wire guidance, another concept that was ahead of its time. Types of wire guidance ranged from fabric ropes, metal wire ropes, electrical cables, air hoses, and even the flexible shaft. But the unique feature was to have the guide wire pay out from the center of the cable canister, where the cable reel does not have a central spool.

While it is true that many of these ideas did not see the light of day, nor the darkness of the deep, a few did make it past the drawing board and into experimental testing, like the Sims/Edison torpedo. John Lay (a First Assistant Engineer in the U.S. Navy during the Civil War) and W.W.W. Wood (Chief Engineer, U.S. Navy) conducted in-water tests, and John Howell's flywheel efforts even reached deployment (an example is on display at the Naval Undersea Museum, Keyport, WA). Many of these ideas were never tested in battle, even though several conflicts occurred during this time period, such as The Franco-Prussian War, The Russo-Japanese War, The Spanish-American War, and World War I. The opportunity was there, but any hardware developed from these patents just wasn't ready for prime time (specifically the poor performance of the two Lay Torpedoes launched in 1879 during the conflict between Peru and Chile).

Except for the propulsion-related patents, not many of these ideas were incorporated into Whitehead-class torpedoes, or in any of its follow-on variants. Especially missing are patents geared toward helping a torpedo maintain a straight path (like improved gyros to control its course). Yet straight running, depth control, and impact detonation (once the Mark 6 Magnetic Influence Exploder was deactivated) were the hallmarks of the 1943-era torpedo used by the U.S. Navy in the Pacific Ocean. Where are these patents that actually improved our then in-service torpedoes? Are they still classified?

During this time period electricity came into general usage and made its appearance in these patents to improve control (electro-magnets) and signal coding (from switching leads at the poles of a battery to the variable resistance rheostat), in an effort to eliminate the need for multiple conductors in the guide wire cable. Ropes for steering were replaced by pneumatic cylinders, then electrical circuits, and finally passive and active acoustics, which resolved the earlier issue of steering a torpedo.

The concept of magnetic influence became infamous during World War II, while the application of magnetic attraction quietly sank out of sight. Passive homing (and passive acoustics in general) also made a splash during WWII and continues to find uses to this day. The concept of a snorkel moved over to another type of undersea vehicle.

Among the category of items that never made it very far are guide wire cables with a square cross section, pneumatics for remote control, guide vanes or lights for surface navigation, springs as energy sources, flywheel propulsion (initially quite successful), intentionally spilling oil for guidance, and rocket propulsion (this may be on its way back).

This is also a time of transition for the meaning of the word "torpedo." The word transitioned from the Civil War "torpedo" (what today is called a mine), to "spar torpedo" (installed on a craft and used late in the Civil War), to "torpedo-boat" (during the time of this study), then to "automobile torpedo" (The Whitehead and follow-on designs) or "dirigible torpedo," and finally back to using just the word "torpedo." Meanwhile, the term "torpedo boat" went on to mean an entirely new offensive weapon, which included the famous PT Boats of World War II.

References

Google Patents internet search engine.

Nineteenth-Century Torpedoes and Their Inventors, by Edwyn Gray, Naval Institute Press, 2004.

Pre-Torpedo Era Patents, Naval Undersea Museum study collection, Volume 1 – 3, Naval Undersea Museum, Keyport, WA. 2009.

Torpedoes and Torpedo Warfare, Second Edition, by C. Sleeman, Griffin & Co., Portsmouth, England, 1889.

Undersea Thunder: Torpedoes with Brains, General Electric Review, March and May 1958.

U. S. Patent and Trademark Office, http://www.uspto.gov/

CHARLES R. GUNDERSEN is a retired Mechanical Engineer, with 25 years of experience in providing test and evaluation services for the Navy's latest torpedoes as they progressed through technical and operational evaluation. He specialized in the development of acoustic tracking systems to provide the intercept plot of test torpedoes during their terminal homing maneuvers against target vehicles, both on and off the Navy's instrumented tracking ranges. He is the author of the history and technology of the acoustic tracking ranges at the Naval Undersea Warfare Center Division, Keyport, Washington. Mr. Gundersen earned his Bachelor of Science in Mechanical Engineering and Master of Science in Engineering degrees from the University of Washington, Seattle, Washington. He attained the rank of Commander as an Engineering Duty Officer during his 31-year career in the U.S. Naval Reserve. Currently, he volunteers in the Curator's office at the Naval Undersea Museum, Keyport, Washington.

The author would like to thank Mr. Ronald Krell for his technical and editorial review of this document and for his many comments, of which most were incorporated.